BERARDI

FASTENERS since 1919

Industrial Components 2023

BERARDI

FASTENERS since 1919

OUR VISION

ommitment, passion, and professionalism from all of us so our customer can “forget” about the management of the class C parts. Our goal is to become a point of reference, well known in the market, and able to innovate to anticipate what is needed. Determination to look beyond what defines us, generation after generation.

Innovation,
research and development since 1919

1919 — The business started in 1919 with Giulio Berardi's hardware store in central Bologna.

1997 — In 1997, we opened our first branch in Reggio Emilia.

2006 — With the acquisition of Vibolt and Vitman, the Berardi Group was born in 2006.

2010 — A milestone for the growth of our product portfolio, the partnership with US-based Lee Spring.

2017 — In 2017, Berardi moved to a brand new building. The new headquarters comprise 1500 m^2 of office space, and a 9000 m^2 warehouse.

2018 — Berardi opens its first subsidiary in Northern Africa, Berardi Maroc (Casablanca), and its first international branch in Kastav, Croatia. At the end of 2018, Berardi acquires Brescia-based distributor VIBF Fasteners. The Extracomponents new range project begins.

2019 — In 2019, Berardi celebrated its centenary, under the leadership of the fourth family generation, with the fifth on its way.

2020 — Berardi's range is enriched with new plastic and metal components for the mechanical industry and other sectors. Berardi issues its Extracomponents catalogue.

2022 — In 2022, Berardi welcomes H.I.G. Capital as majority shareholders, while maintaining the company's governance, for an ambitious growth project.

FROM SUPPLIERS TO PARTNERS

Our Mission is to support clients in breaking down the overall cost of supply and we achieve this by suggesting and sharing technical solutions, developing innovative services that cut management costs and offering an ever wider range of products allowing clients to reduce the number of suppliers.
We are also constantly creating new job opportunities and ensuring suitable and comfortable working conditions that enhance the peculiarities of each employee and bring personal satisfaction.
This behaviour encourages full cooperation and effective constant commitment.

QUALITY WITHOUT COMPROMISE

“Quality without compromise” is not just a slogan but a strong belief the company has held since it was founded. The starting point for minimizing the risk of product defects definitely lies within the careful selection of the supply sources made through an audit carried out by qualified staff and a deep knowledge of the suppliers. Alongside this, we can also tag a laboratory that is among the best equipped in our field. As a result of our customer requirements and the development of innovative technologies, it is constantly improved with new instruments and specific staff training. Quality system certification is another sign of the constant care taken to improve the product and the services offered. State of the art equipment includes the traction machine, the salt spray chamber, the micro hardness machine set, the magnatest, the digital system of optical measuring and sorting machines with optical and laser devices to satisfy customers who require defectiveness expressed in parts per million (ppm).

SPECIAL CUSTOM PARTS

The consistent partnerships that we have developed over the years with our suppliers allow us to meet the various demands for special custom parts, competitively and with quality. We can therefore meet requests for hot moulded parts (for medium-large sizes and small series) or cold moulded parts (when quantities are more substantial), using the most economic machines for simple items and multi-station machines when the structure of the parts becomes really complex. We are equally competitive in the supply of parts requiring chip removal (turned parts). We can choose traditional cam machines to reduce manufacturing costs for simple parts, or more sophisticated and complete CNC machinery when the shape and precision of the parts is paramount.
We have convenient solutions even for large batches using special multi-spindle lathes. In protective coatings and materials, our experience now includes all of the most common types used on the market.

LOGISTICS BUILT AROUND THE CUSTOMER

In a framework in which rapid responses to market needs are becoming increasingly important, an efficient logistics organization is essential in order to meet market expectations. Berardi's distribution system is made up of a modern head office, located in Castel Guelfo, with centralized main services (Personnel, Administration, Technical, Purchasing, Logistics and Quality), and a network of peripheral warehouses, widely covering the domestic territory, with stock sized on the need of local customers. The business structure focuses on offering the best efficiency in terms of service and also technical support. This system, which is perfectly replicated in all the warehouses, boasts high flexibility and computerization and ensures a rigorous traceability of the batches and, for most of the items, also their origin. We are thus able to quickly meet the specific needs of customers in terms of customised labelling, electronic exchange/ real-time information sharing and Kanban and Kanban Up service management. Continuous investments in logistics and research and the development of innovative services make us the ideal partner for the management of class C parts. Earning the trust of a growing number of customers encourages us to continue along this path.

KANBAN AND KANBAN UP: TWO EXCLUSIVE SYSTEMS, ONE SINGLE GOAL

Kanban
We offer logistics systems which are extremely adaptable, designed specifically for our customers and reserved for the “Lean” supply of class C items. A dedicated team analyses the procedures and production flows to be improved and uses a collaborative approach to develop the perfect “integrated” logistics solution. The saving achieved and the reduction of problems related to the management of these materials are the basis for the success of our logistics solutions and our best form of advertising. The reliability of hundreds of “Kanban” services and continuous research and development of innovative solutions have made Berardi the ideal partner to achieve the level of competitiveness and flexibility required in today’s market.

Kanban Up
To ensure the simplification of our services, we have improved the integrated logistics offer, introducing a new method of detection and control for logistics facilities: Kanban Up. Thanks to this innovative system, our customers can constantly monitor their logistics facilities through a dedicated web portal, detect missing items, and send orders directly through their smartphone. More operators (process owner) can be enabled to detect deficiencies, thus creating an independent supply of the individual departments while still keeping control over them through the automatic sending of e-mails to the purchasing manager, which contain all the information about the order.

S-BBK smart box
S-BBK 4.0 is a highly technological Smart box equipped with capacitive intelligence and built-in electronics it uses to constantly communicate the quantity of material it contains, thus making it possible to know how much is in Stock at all times and to automate supply activities. When the quantity inside the container is less than or equal to the pre-set Re-order Point, the system automatically generates a refill request, which is sent regularly on the planned fulfilment days.

EasySelf 24
The EasySelf 24 system, from the Industry 4.0 perspective, facilitates the automatic operation of the whole management flow for different items, such as: PPE, tools, accessories, first-aid objects and assorted equipment. It eliminates waste from repetitive activities with low added value, material storage, their handling, and inventory management. In terms of safety, it also automates the PPE use registry and ensures the precise tracking of consumption, monitoring withdrawals and any abnormal uses by individual operators. EasySelf 24 is entirely remotely controlled and sends alarms and signals anomalies without the need to connect to the data network. It manages sending item reorders to the supplier, and produces consumption statistic, optimizing all Supply Chain activities

NEW RANGE OF INDUSTRIAL COMPONENTS

We always keep expanding our product range to consolidate our supplying partnerships.
Our mission is to work with our clients to simplify their C-parts management and reduce the overall costs.
We believe that interfacing with one partner for multiple product categories is a fundamental aspect of an efficient supply chain.
For this reason we have developed a comprehensive range of components for all industrial sectors and applications.
We put in all our commitment, knowledge and experience to meet the needs of our Clients, who are always at the center of our development projects.

INDEX

1 Cable glands, cable clamps

2 Electric terminals

3 Hose clamps and cable ties

4 Cable management

5 Plastic plugs and inserts

6 Anti-vibration mounts

7 Plastic fasteners

8 Snap-in fasteners

9 Spacers

10 Springs

INDEX

11 Handles

12 Industrial hinges

13 Knobs

14 Toogle latches

15 Magnets

16 Positioning and indexing elements

17 Mechanical elements

18 Lifting

19 Feet

20 Industrial wheels

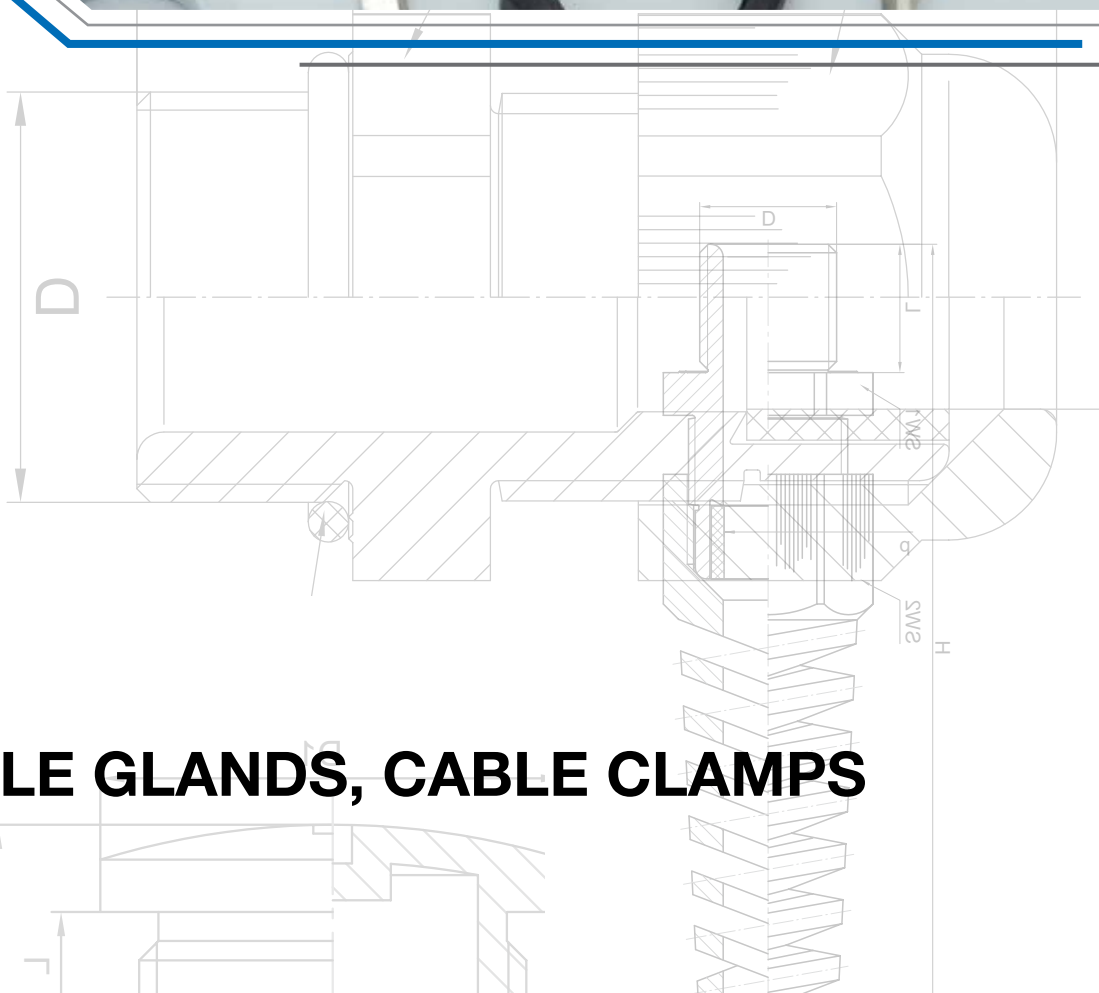

1 CABLE GLANDS, CABLE CLAMPS

Plastic cable glands
page 1.1

Plastic lock nuts
page 1.10

Plastic plugs
page 1.12

Plastic compensating valves
page 1.15

Metal cable glands
page 1.16

Metal lock nuts
page 1.25

Metal plugs
page 1.30

Metal compensating valves
page 1.33

Sealing rings
page 1.34

Plastic cable clamps
page 1.36

Metal fittings
page 1.37

PERFECT CABLE GLAND
metric thread

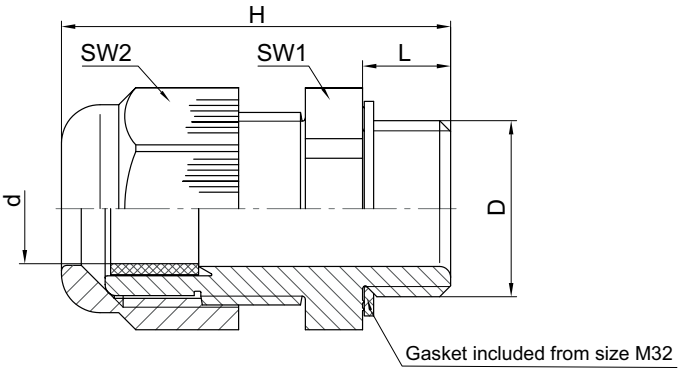

MATERIAL
Body: PA6 (Polyamide)
Sealing ring: CR/NBR (Nitrile chloroprene)
Gasket: CR (Chloroprene)

COLOUR
G5 Grey RAL 7035
G7 Grey RAL 7001
N5 Black RAL 9005

PROTECTION GRADE
IP68 - 5 bar

SELF-EXTINGUISHING
UL 94 V-2

OPERATING TEMPERATURE
-20°C ÷ 100°C

CERTIFICATION
VDE40020902

UL/CSA-FILE
E140310

STANDARD TEST
EN 62444 / UL 514B

Code G5	Code G7	Code N5	D	d	H	L	Properties	SW1	SW2	Package (pcs)
JCR0401203CM8	JCR0401203CO9	JCR0401203CM0	M12 x 1,5	3 ÷ 6,5	31	8	Standard thread	15	15	100
JCR0401605CM8	JCR0401605CO9	JCR0401605CM0	M16 x 1,5	5 ÷ 9,5	35,5	8	Standard thread	20	20	100
JCR0402008CM8	JCR0402008CO9	JCR0402008CM0	M20 x 1,5	8 ÷ 13	36	8	Standard thread	24	24	100
JCR0402511CM8	JCR0402511CO9	JCR0402511CM0	M25 x 1,5	11 ÷ 17	43	8	Standard thread	29	29	50
JCR0403215CM8	JCR0403215CO9	JCR0403215CM0	M32 x 1,5	15 ÷ 21	50	10	Standard thread	36	36	25
JCR0404019CM8	JCR0404019CO9	JCR0404019CM0	M40 x 1,5	19 ÷ 28	51	10	Standard thread	46	46	10
JCR0405027CM8	JCR0405027CO9	JCR0405027CM0	M50 x 1,5	27 ÷ 35	61,5	12	Standard thread	55	55	5
JCR0406332CM8	JCR0406332CO9	JCR0406332CM0	M63 x 1,5	32 ÷ 42	65,5	12	Standard thread	68	68	5
JCR0401203LM8	JCR0401203LO9	JCR0401203LM0	M12 x 1,5	3 ÷ 6,5	38	15	Long thread	15	15	100
JCR0401605LM8	JCR0401605LO9	JCR0401605LM0	M16 x 1,5	5 ÷ 9,5	42,5	15	Long thread	20	20	100
JCR0402008LM8	JCR0402008LO9	JCR0402008LM0	M20 x 1,5	8 ÷ 13	43	15	Long thread	24	24	100
JCR0402511LM8	JCR0402511LO9	JCR0402511LM0	M25 x 1,5	11 ÷ 17	50	15	Long thread	29	29	50
JCR0403215LM8	JCR0403215LO9	JCR0403215LM0	M32 x 1,5	15 ÷ 21	55	15	Long thread	36	36	25
JCR0404019LM8	JCR0404019LO9	JCR0404019LM0	M40 x 1,5	19 ÷ 28	59	18	Long thread	46	46	10
JCR0405027LM8	JCR0405027LO9	JCR0405027LM0	M50 x 1,5	27 ÷ 35	67,5	18	Long thread	55	55	5
JCR0406332LM8	JCR0406332LO9	JCR0406332LM0	M63 x 1,5	32 ÷ 42	71,5	18	Long thread	68	68	5

The same sizes are available with UL/CSA certification

MATERIAL
Body: PA6 (Polyamide)
Sealing ring: CR/NBR (Nitrile chloroprene)
Gasket: CR (Chloroprene)

COLOUR
G5 Grey RAL 7035
G7 Grey RAL 7001
N5 Black RAL 9005

PROTECTION GRADE
IP68 - 5 bar

SELF-EXTINGUISHING
UL 94 V-2

OPERATING TEMPERATURE
-20°C ÷ 100°C

UL/CSA-FILE
E140310

STANDARD TEST
514B

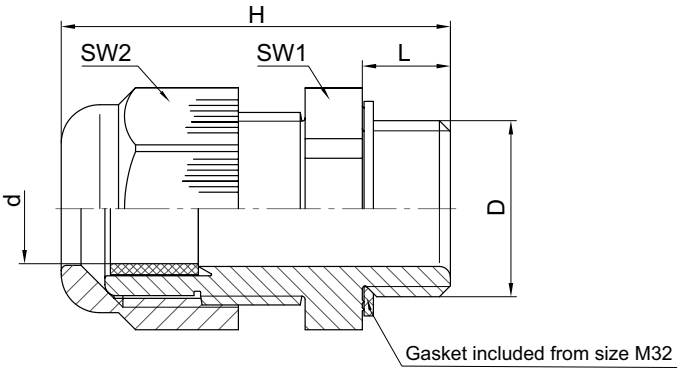

Code G5	Code G7	Code N5	D	d	H	L	SW1	SW2	Package (pcs)
JCR15012020M8	**JCR15012020O9**	**JCR15012020M0**	M12 x 1,5	2 ÷ 5	31	8	15	15	100
JCR15016030M8	**JCR15016030O9**	**JCR15016030M0**	M16 x 1,5	3 ÷ 7	44	15	22	22	100
JCR15020050M8	**JCR15020050O9**	**JCR15020050M0**	M20 x 1,5	5 ÷ 9	41,5	11	24	24	100
JCR15020070M8	**JCR15020070O9**	**JCR15020070M0**	M20 x 1,5	7 ÷ 12	47,5	15	27	27	50
JCR15025090M8	**JCR15025090O9**	**JCR15025090M0**	M25 x 1,5	9 ÷ 16	52	15	33	33	50
JCR15032120M8	**JCR15032120O9**	**JCR15032120M0**	M32 x 1,5	12 ÷ 20	57	15	42	42	25
JCR15040200M8	**JCR15040200O9**	**JCR15040200M0**	M40 x 1,5	20 ÷ 26	69	18	53	53	10
JCR15050250M8	**JCR15050250O9**	**JCR15050250M0**	M50 x 1,5	25 ÷ 31	73,5	18	60	60	5
JCR15063290M8	**JCR15063290O9**	**JCR15063290M0**	M63 x 1,5	29 ÷ 35	73	18	65	65	5

PERFECT CABLE GLAND MULTI-HOLE
metric thread

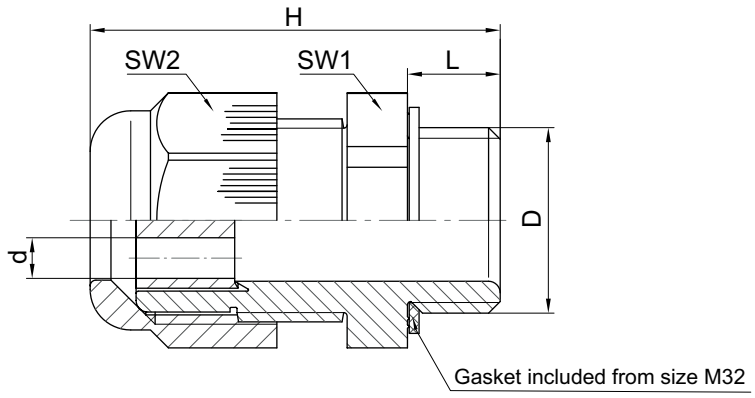

MATERIAL

Body:	PA6 (Polyamide)
Sealing ring:	TPE (Thermoplastic elastomer)
Gasket:	CR (Chloroprene)

COLOUR

G5 Grey RAL 7035
G7 Grey RAL 7001
N5 Black RAL 9005

PROTECTION GRADE
IP65

SELF-EXTINGUISHING
UL 94 V-2

OPERATING TEMPERATURE
-20°C ÷ 100°C

ACCESSORIES
Multi-hole sealing rings

Code G5	Code G7	Code N5	D	no. of Holes x d x d	H	L	SW1	SW2	Package (pcs)
JCR17012216M8	**JCR1701221609**	**JCR17012216M0**	M12 x 1,5	2 x 1,6	31	8	15	15	100
JCR17016245M8	**JCR1701624509**	**JCR17016245M0**	M16 x 1,5	2 x 4,5	35,5	8	20	20	100
JCR17020240M8	**JCR1702024009**	**JCR17020240M0**	M20 x 1,5	2 x 4	36	8	24	24	100
JCR17025465M8	**JCR1702546509**	**JCR17025465M0**	M25 x 1,5	4 x 6,5	43	8	29	29	50
JCR17032485M8	**JCR1703248509**	**JCR17032485M0**	M32 x 1,5	4 x 8,5	50	10	36	36	25
JCR17040585M8	**JCR1704058509**	**JCR17040585M0**	M40 x 1,5	5 x 8,5	51	10	46	46	10

MATERIAL
Body: PA6 (Polyamide)
Sealing ring: CR/NBR (Nitrile chloroprene)

COLOUR
G5 Grey RAL 7035
G7 Grey RAL 7001
N5 Black RAL 9005

PROTECTION GRADE
IP68 - 5 bar

SELF-EXTINGUISHING
UL 94 V-2

OPERATING TEMPERATURE
-20°C ÷ 100°C

UL/CSA-FILE
E140310

STANDARD TEST
UL 514B

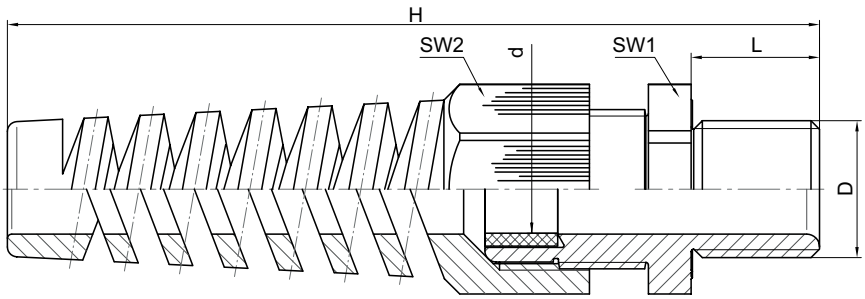

Code G5	Code G7	Code N5	D	d	H	L	SW1	SW2	Package (pcs)
JCR32012030M8	**JCR32012030O9**	**JCR32012030M0**	M12 x 1,5	3 ÷ 6,5	63,5	8	15	15	100
JCR32016050M8	**JCR32016050O9**	**JCR32016050M0**	M16 x 1,5	5 ÷ 10	94,5	15	22	22	100
JCR32020060M8	**JCR32020060O9**	**JCR32020060M0**	M20 x 1,5	6 ÷ 12	101,5	11	24	24	50
JCR32020100M8	**JCR32020100O9**	**JCR32020100M0**	M20 x 1,5	10 ÷ 14	116	15	27	27	25
JCR32025130M8	**JCR32025130O9**	**JCR32025130M0**	M25 x 1,5	13 ÷ 18	132,5	15	33	33	25

PERFECT FIX CABLE GLAND
metric thread without ring

MATERIAL

Body:	PA6 (Polyamide)
External sealing ring:	CR/NBR (Nitrile chloroprene)
Internal sealing ring:	TPE (Thermoplastic elastomer)
Gasket:	NBR/PTFE (Polytetrafluoroethylene nitrile rubber)

COLOUR

G5 Grey RAL 7035
G7 Grey RAL 7001
N5 Black RAL 9005

PROTECTION GRADE
IP68 - 5 bar

SELF-EXTINGUISHING
UL 94 V-2

OPERATING TEMPERATURE
-20°C ÷ 100°C

NOTES
Quick installation with bayonet closure.

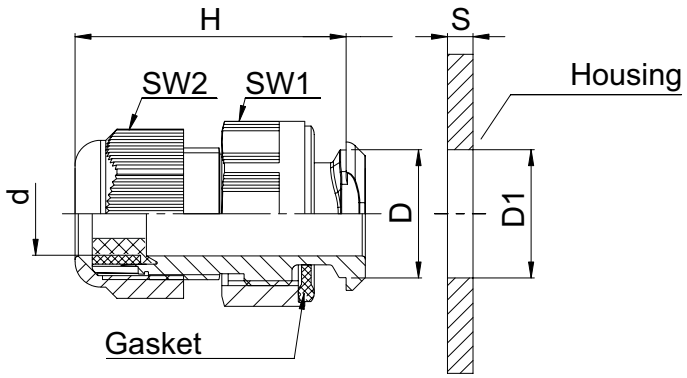

Code G5	Code G7	Code N5	D	d	H	SW1	SW2	D1	S	Package (pcs)
JCR34016050M8	**JCR34016050O9**	**JCR34016050M0**	M16	5 ÷ 10	38,5	24	20	16,1 ÷ 16,3	1 ÷ 4	100
JCR34020080M8	**JCR34020080O9**	**JCR34020080M0**	M20	8 ÷ 13	42,5	26	24	20,1 ÷ 20,4	1 ÷ 4	100
JCR34025110M8	**JCR34025110O9**	**JCR34025110M0**	M25	11 ÷ 17	48	32	29	25,1 ÷ 25,4	1 ÷ 2,5	50
JCR34032150M8	**JCR34032150O9**	**JCR34032150M0**	M32	15 ÷ 21	58,5	42	36	32,1 ÷ 32,4	1 ÷ 4	25

MATERIAL
Body: PA6 (Polyamide)
Sealing ring: CR/NBR (Nitrile chloroprene)
O-Ring: NBR (Nitrile rubber)

COLOUR
G5 Grey RAL 7035
G7 Grey RAL 7001
N5 Black RAL 9005

PROTECTION GRADE
IP68 - 5 bar

SELF-EXTINGUISHING
UL 94 V-2

OPERATING TEMPERATURE
-20°C ÷ 100°C

UL/CSA-FILE
E140310

STANDARD TEST
UL 514B

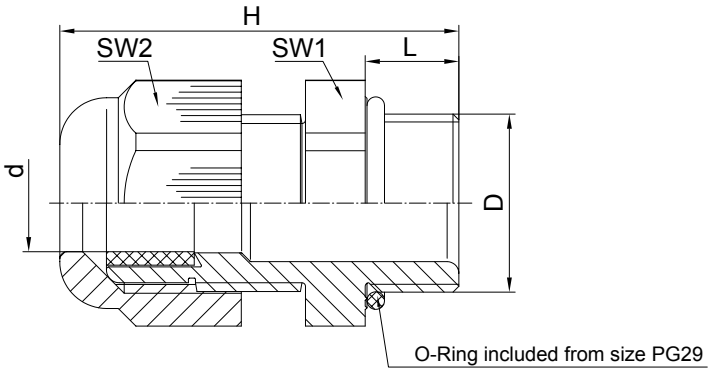

Code G5	Code G7	Code N5	D	d	H	L	Properties	SW1	SW2	Package (pcs)
JCR0500703CM8	JCR0500703CO9	JCR0500703CM0	PG7	3 ÷ 6,5	30,5	8	Standard thread	15	15	100
JCR0500904CM8	JCR0500904CO9	JCR0500904CM0	PG9	4 ÷ 8	34	8	Standard thread	19	19	100
JCR0501105CM8	JCR0501105CO9	JCR0501105CM0	PG11	5 ÷ 10	37	8	Standard thread	22	22	100
JCR0501306CM8	JCR0501306CO9	JCR0501306CM0	PG13,5	6 ÷ 12	39	9	Standard thread	24	24	100
JCR0501610CM8	JCR0501610CO9	JCR0501610CM0	PG16	10 ÷ 14	42,5	10	Standard thread	27	27	50
JCR0502113CM8	JCR0502113CO9	JCR0502113CM0	PG21	13 ÷ 18	47,5	11	Standard thread	33	33	50
JCR0502918CM8	JCR0502918CO9	JCR0502918CM0	PG29	18 ÷ 25	53	11	Standard thread	42	42	25
JCR0503622CM8	JCR0503622CO9	JCR0503622CM0	PG36	22 ÷ 32	61	13	Standard thread	53	53	10
JCR0504230CM8	JCR0504230CO9	JCR0504230CM0	PG42	30 ÷ 38	65	13	Standard thread	60	60	5
JCR0500703LM8	JCR0500703LO9	JCR0500703LM0	PG7	3 ÷ 6,5	37,5	15	Long thread	15	15	100
JCR0500904LM8	JCR0500904LO9	JCR0500904LM0	PG9	4 ÷ 8	41	15	Long thread	19	19	100
JCR0501105LM8	JCR0501105LO9	JCR0501105LM0	PG11	5 ÷ 10	44	15	Long thread	22	22	100
JCR0501306LM8	JCR0501306LO9	JCR0501306LM0	PG13,5	6 ÷ 12	45	15	Long thread	24	24	100
JCR0501610LM8	JCR0501610LO9	JCR0501610LM0	PG16	10 ÷ 14	47,5	15	Long thread	27	27	50
JCR0502113LM8	JCR0502113LO9	JCR0502113LM0	PG21	13 ÷ 18	51,5	15	Long thread	33	33	50
JCR0502918LM8	JCR0502918LO9	JCR0502918LM0	PG29	18 ÷ 25	57	15	Long thread	42	42	25
JCR0503622LM8	JCR0503622LO9	JCR0503622LM0	PG36	22 ÷ 32	66	18	Long thread	53	53	10

PERFECT CABLE GLAND REDUCED TIGHTENING

PG thread

MATERIAL

Body:	PA6 (Polyamide)
Sealing ring:	CR/NBR (Nitrile chloroprene)
O-Ring:	NBR (Nitrile rubber)

COLOUR

G5 Grey RAL 7035
G7 Grey RAL 7001
N5 Black RAL 9005

PROTECTION GRADE

IP68 - 5 bar

SELF-EXTINGUISHING

UL 94 V-2

OPERATING TEMPERATURE

-20°C ÷ 100°C

UL/CSA-FILE

E140310

STANDARD TEST

UL 514B

Code G5	Code G7	Code N5	D	d	H	L	SW1	SW2	Package (pcs)
JCR12007020M8	**JCR1200702O9**	**JCR12007020M0**	PG7	2 ÷ 5	30,5	8	15	15	100
JCR12009020M8	**JCR1200902O9**	**JCR12009020M0**	PG9	2 ÷ 6	34	8	19	19	100
JCR12011030M8	**JCR1201103O9**	**JCR12011030M0**	PG11	3 ÷ 7	37	8	22	22	100
JCR12013050M8	**JCR1201305O9**	**JCR12013050M0**	PG13,5	5 ÷ 9	39	9	24	24	100
JCR12016070M8	**JCR1201607O9**	**JCR12016070M0**	PG16	7 ÷ 12	42,5	10	27	27	50
JCR12021090M8	**JCR1202109O9**	**JCR12021090M0**	PG21	9 ÷ 16	47,5	11	33	33	50
JCR12029120M8	**JCR1202912O9**	**JCR12029120M0**	PG29	12 ÷ 20	53	11	42	42	25
JCR12036200M8	**JCR1203620O9**	**JCR12036200M0**	PG36	20 ÷ 26	61	13	53	53	10

MATERIAL
Body: PA6 (Polyamide)
Sealing ring: TPE (Thermoplastic elastomer)
O-Ring: NBR (Nitrile rubber)

COLOUR
G5 Grey RAL 7035
G7 Grey RAL 7001
N5 Black RAL 9005

PROTECTION GRADE
IP65

SELF-EXTINGUISHING
UL 94 V-2

OPERATING TEMPERATURE
-20°C ÷ 100°C

ACCESSORIES
Multi-hole sealing rings.

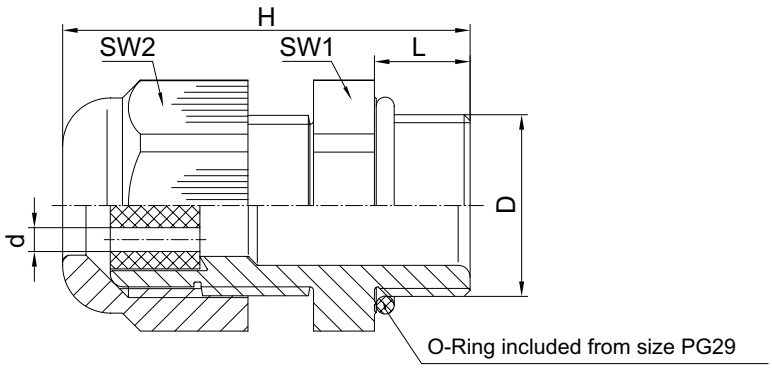

Code G5	Code G7	Code N5	D	no. of Holes x d x d	H	L	SW1	SW2	Package (pcs)
JCR18009235M8	**JCR18009235O9**	**JCR18009235M0**	PG9	2 x 3,5	34	8	19	19	100
JCR18011245M8	**JCR18011245O9**	**JCR18011245M0**	PG11	2 x 4,5	37	8	22	22	100
JCR18013245M8	**JCR18013245O9**	**JCR18013245M0**	PG13,5	2 x 4,5	39	9	24	24	100
JCR18016365M8	**JCR18016365O9**	**JCR18016365M0**	PG16	3 x 6,5	42,5	10	27	27	50
JCR18021465M8	**JCR18021465O9**	**JCR18021465M0**	PG21	4 x 6,5	47,5	11	33	33	50
JCR18029675M8	**JCR18029675O9**	**JCR18029675M0**	PG29	6 x 7,5	53	11	42	42	25

MATERIAL
Body: PA6 (Polyamide)
Sealing ring: CR/NBR (Nitrile chloroprene)

COLOUR
G5 Grey RAL 7035
G7 Grey RAL 7001
N5 Black RAL 9005

PROTECTION GRADE
IP68 - 5 bar

SELF-EXTINGUISHING
UL 94 V-2

OPERATING TEMPERATURE
-20°C ÷ 100°C

UL/CSA-FILE
E140310

STANDARD TEST
UL 514B

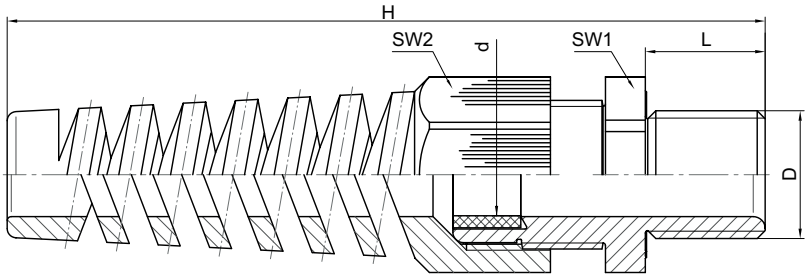

Code G5	Code G7	Code N5	D	d	H	L	SW1	SW2	Package (pcs)
JCR33007030M8	**JCR3300703O9**	**JCR33007030M0**	PG7	3 ÷ 6,5	63	8	15	15	100
JCR33009040M8	**JCR3300904O9**	**JCR33009040M0**	PG9	4 ÷ 8	74	8	19	19	100
JCR33011050M8	**JCR3301105O9**	**JCR33011050M0**	PG11	5 ÷ 10	87	8	22	22	100
JCR33013060M8	**JCR3301306O9**	**JCR33013060M0**	PG13,5	6 ÷ 12	98	9	24	24	50
JCR33016100M8	**JCR3301610O9**	**JCR33016100M0**	PG16	10 ÷ 14	112	10	27	27	25
JCR33021130M8	**JCR3302113O9**	**JCR33021130M0**	PG21	13 ÷ 18	130	11	33	33	25

MATERIAL
PA6-CV30% (Glass-filled polyamide)

COLOUR
G5 Grey RAL 7035
G7 Grey RAL 7001
N5 Black RAL 9005

SELF-EXTINGUISHING
HB (UL 94)

OPERATING TEMPERATURE
-40°C ÷ 100°C

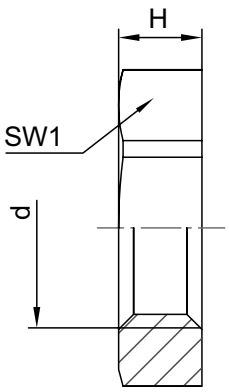

Code G5	Code G7	Code N5	d	H	SW1	Package (pcs)
JCD10012000M8	**JCD10012000O9**	**JCD10012000M0**	M12 x 1,5	5	17	100
JCD10016000M8	**JCD10016000O9**	**JCD10016000M0**	M16 x 1,5	5	22	100
JCD10020000M8	**JCD10020000O9**	**JCD10020000M0**	M20 x 1,5	6	27	100
JCD10025000M8	**JCD10025000O9**	**JCD10025000M0**	M25 x 1,5	6	32	100
JCD10032000M8	**JCD10032000O9**	**JCD10032000M0**	M32 x 1,5	7	41	100
JCD10040000M8	**JCD10040000O9**	**JCD10040000M0**	M40 x 1,5	7	50	50
JCD10050000M8	**JCD10050000O9**	**JCD10050000M0**	M50 x 1,5	8	60	50
JCD10063000M8	**JCD10063000O9**	**JCD10063000M0**	M63 x 1,5	8	75	50

HEXAGONAL LOCK NUT
PG thread

MATERIAL
PA6-CV30% (Glass-filled polyamide)

COLOUR
G5 Grey RAL 7035
G7 Grey RAL 7001
N5 Black RAL 9005

SELF-EXTINGUISHING
HB (UL 94)

OPERATING TEMPERATURE
-40°C ÷ 100°C

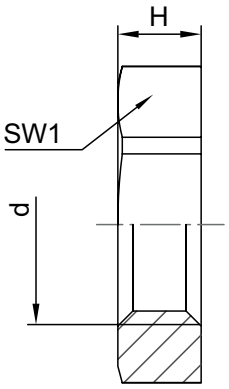

Code G5	Code G7	Code N5	d	H	SW1	Package (pcs)
JCD05007000M8	JCD0500700O9	JCD05007000M0	PG7	5	19	100
JCD05009000M8	JCD0500900O9	JCD05009000M0	PG9	5	22	100
JCD05011000M8	JCD0501100O9	JCD05011000M0	PG11	5	24	100
JCD05013000M8	JCD0501300O9	JCD05013000M0	PG13,5	6	27	100
JCD05016000M8	JCD0501600O9	JCD05016000M0	PG16	6	30	100
JCD05021000M8	JCD0502100O9	JCD05021000M0	PG21	7	36	100
JCD05029000M8	JCD0502900O9	JCD05029000M0	PG29	7	46	100
JCD05036000M8	JCD0503600O9	JCD05036000M0	PG36	8	60	50
JCD05042000M8	JCD0504200O9	JCD05042000M0	PG42	8	65	50
JCD05048000M8	JCD0504800O9	JCD05048000M0	PG48	8	70	50

MATERIAL
Body: PA6 (Polyamide)
Gasket: CR (Chloroprene)

COLOUR
G5 Grey RAL 7035
G7 Grey RAL 7001
N5 Black RAL 9005

PROTECTION GRADE
IP68 - 5 bar

SELF-EXTINGUISHING
UL 94 V-2

OPERATING TEMPERATURE
-40°C ÷ 100°C

UL/CSA-FILE
E140310

STANDARD TEST
UL 514B

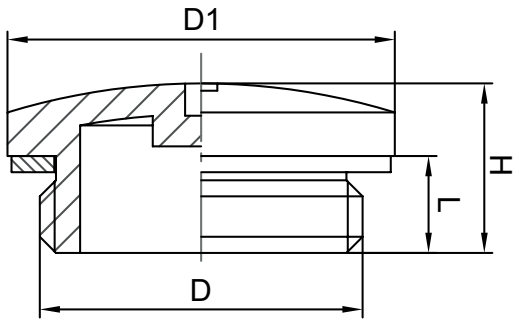

Code G5	Code G7	Code N5	D	D1	H	L	Package (pcs)
JCT07012000M8	**JCT07012000O9**	**JCT07012000M0**	M12 x 1,5	15	10	6	100
JCT07016000M8	**JCT07016000O9**	**JCT07016000M0**	M16 x 1,5	20	10,5	6	100
JCT07020000M8	**JCT07020000O9**	**JCT07020000M0**	M20 x 1,5	24	10,5	6	100
JCT07025000M8	**JCT07025000O9**	**JCT07025000M0**	M25 x 1,5	30	13	8	100
JCT07032000M8	**JCT07032000O9**	**JCT07032000M0**	M32 x 1,5	37	13,5	8	100
JCT07040000M8	**JCT07040000O9**	**JCT07040000M0**	M40 x 1,5	46	14	8	50
JCT07050000M8	**JCT07050000O9**	**JCT07050000M0**	M50 x 1,5	56	16,5	10	50
JCT07063000M8	**JCT07063000O9**	**JCT07063000M0**	M63 x 1,5	70	17	12	50

THREADED PLUG
metric thread IP54

MATERIAL
PA6-CV30% (Glass-filled polyamide)

COLOUR
G5 Grey RAL 7035
G7 Grey RAL 7001
N5 Black RAL 9005

PROTECTION GRADE
IP54

SELF-EXTINGUISHING
HB (UL 94)

OPERATING TEMPERATURE
-40°C ÷ 100°C

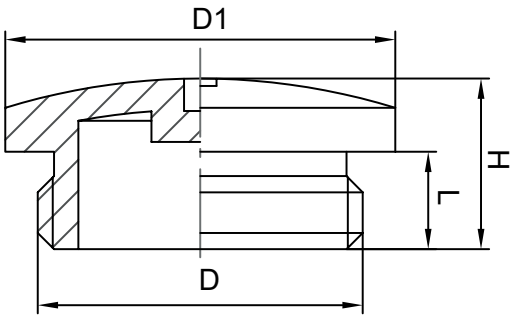

Code G5	Code G7	Code N5	D	D1	H	L	Package (pcs)
JCT05012000M8	**JCT0501200O9**	**JCT05012000M0**	M12 x 1,5	15	10	6	100
JCT05016000M8	**JCT0501600O9**	**JCT05016000M0**	M16 x 1,5	20	10,5	6	100
JCT05020000M8	**JCT0502000O9**	**JCT05020000M0**	M20 x 1,5	24	10,5	6	100
JCT05025000M8	**JCT0502500O9**	**JCT05025000M0**	M25 x 1,5	30	13	8	100
JCT05032000M8	**JCT0503200O9**	**JCT05032000M0**	M32 x 1,5	37	13,5	8	100
JCT05040000M8	**JCT0504000O9**	**JCT05040000M0**	M40 x 1,5	46	14	8	50
JCT05050000M8	**JCT0505000O9**	**JCT05050000M0**	M50 x 1,5	56	16,5	10	50
JCT05063000M8	**JCT0506300O9**	**JCT05063000M0**	M63 x 1,5	70	17	12	50

MATERIAL
PA6-CV30% (Glass-filled polyamide)

COLOUR
G5 Grey RAL 7035

PROTECTION GRADE
IP54

SELF-EXTINGUISHING
HB (UL 94)

OPERATING TEMPERATURE
-40°C ÷ 100°C

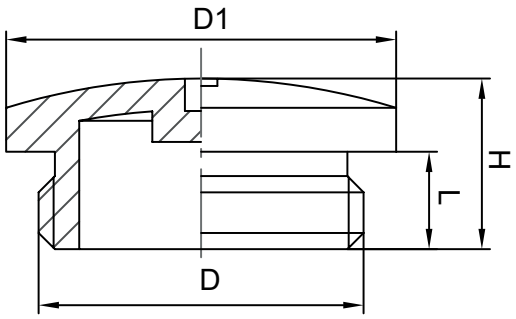

Code G5	D	D1	H	L	Package (pcs)
JCT06007000M8	PG7	15	10	6	100
JCT06009000M8	PG9	19	10	6	100
JCT06011000M8	PG11	22	10	6	100
JCT06013000M8	PG13,5	25	10	6	100
JCT06016000M8	PG16	27	10	6	100
JCT06021000M8	PG21	33	12,5	8	100
JCT06029000M8	PG29	44,5	13	8	100
JCT06036000M8	PG36	55,5	15	10	50
JCT06042000M8	PG42	62,5	15,5	10	50
JCT06048000M8	PG48	69,5	17	12	50

VENTING ELEMENT
metric thread

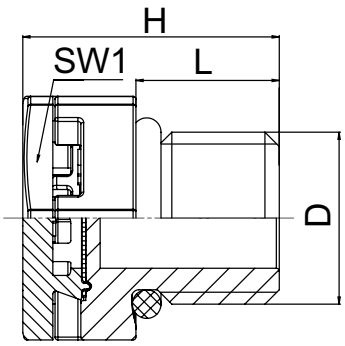

MATERIAL
Body: PA6 (Polyamide)
Diaphragm: PES (Polyethersulfone)
O-ring: NBR (Nitrile rubber)

COLOUR
G5 Grey RAL 7035
N5 Black RAL 9005

PROTECTION GRADE
IP66
IP68 - 0,6 bar (60 min)
IP69

SELF-EXTINGUISHING
UL 94 V-0

AIR PASSAGE
> 400 ml / min / cm² a Δp = 0,07 bar

WATER PASSAGE
≥ 0,83 bar (30 sec)

OPERATING TEMPERATURE
-40°C ÷ 100°C

USE
Protection for electro-technical and electronic enclosures against condensation due to temperature and pressure variations.

NOTES
Ventilation and continuous adaptation to the internal pressure.
The venting element does not work if blocked by dust or submerged in water.

Code G5	Code N5	D	H	L	SW1	Package (pcs)
JCT12012000M8	**JCT12012000M0**	M12 x 1,5	17,8	10	17	100
JCT12020000M8	**JCT12020000M0**	M20 x 1,5	21,6	10	27	10
JCT12040000M8	**JCT12040000M0**	M40 x 1,5	35,6	18	50	5

MATERIAL - SURFACE TREATMENT
Body: OT58 (Brass) nickel-plated
Insert: PA6 (Polyamide)
Sealing ring: CR/NBR (Nitrile chloroprene)
O-ring: NBR (Nitrile rubber)

PROTECTION GRADE
IP68 - 5 bar
IP69K (tested for M12 - M25 - M50 - M63)

SELF-EXTINGUISHING
UL 94 V-2

OPERATING TEMPERATURE
-20°C ÷ 100°C

CERTIFICATION
VDE 40020901

UL/CSA-FILE
E140310

STANDARD TEST
EN 62444 / UL 514B

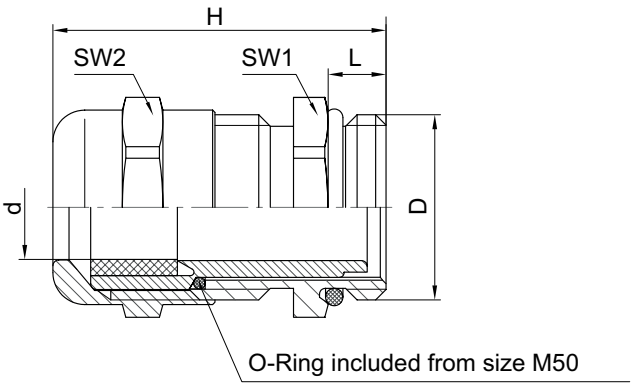

Code	D	d	H	L	Properties	SW1	SW2	Package (pcs)
JCR0301203C08	M12 x 1,5	3 ÷ 6	25	5	Standard thread	14	14	100
JCR0301605C08	M16 x 1,5	5 ÷ 9	30	5	Standard thread	17	17	100
JCR0302009C08	M20 x 1,5	9 ÷ 13	33,5	6	Standard thread	22	22	100
JCR0302511C08	M25 x 1,5	11 ÷ 16	36,5	7	Standard thread	27	27	50
JCR0303214C08	M32 x 1,5	14 ÷ 20	38	8	Standard thread	34	34	25
JCR0304019C08	M40 x 1,5	19 ÷ 27	41	8	Standard thread	43	43	10
JCR0305024C08	M50 x 1,5	24 ÷ 35	49,5	9	Standard thread	55	55	5
JCR0306332C08	M63 x 1,5	32 ÷ 42	52,5	10	Standard thread	65	65	5
JCR0306338C08	M63 x 1,5	38 ÷ 48	52,5	10	Standard thread	65	65	5
JCR0301203L08	M12 x 1,5	3 ÷ 6	30	10	Long thread	14	14	100
JCR0301605L08	M16 x 1,5	5 ÷ 9	35	10	Long thread	17	17	100
JCR0302009L08	M20 x 1,5	9 ÷ 13	37,5	10	Long thread	22	22	100
JCR0302511L08	M25 x 1,5	11 ÷ 16	40,5	11	Long thread	27	27	50
JCR0303214L08	M32 x 1,5	14 ÷ 20	43	13	Long thread	34	34	25
JCR0304019L08	M40 x 1,5	19 ÷ 27	46	13	Long thread	43	43	10
JCR0305024L08	M50 x 1,5	24 ÷ 35	54,5	14	Long thread	55	55	5
JCR0306332L08	M63 x 1,5	32 ÷ 42	56,5	14	Long thread	65	65	5
JCR0306338L08	M63 x 1,5	38 ÷ 48	56,5	14	Long thread	65	65	5

PERFECT CABLE GLAND REDUCED TIGHTENING
metric thread

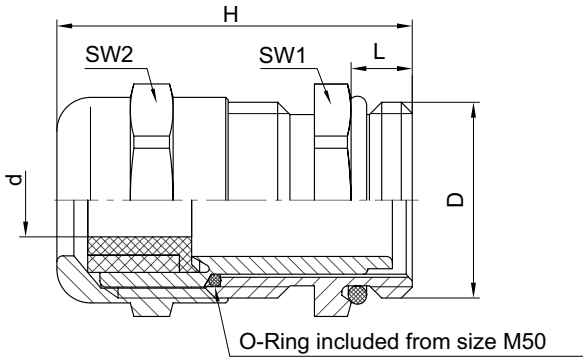

MATERIAL - SURFACE TREATMENT

Body:	OT58 (Brass) nickel-plated
Insert:	PA6 (Polyamide)
Sealing ring:	CR/NBR (Nitrile chloroprene)
O-ring:	NBR (Nitrile rubber)

PROTECTION GRADE
IP68 - 5 bar
IP69K (tested for M12 - M25 - M50 - M63)

SELF-EXTINGUISHING
UL 94 V-2

OPERATING TEMPERATURE
-20°C ÷ 100°C

CERTIFICATION
VDE 40020901

UL/CSA-FILE
E140310

STANDARD TEST
EN 62444 / UL 514B

NOTES
*One-piece retaining ring.

Code	D	d	H	L	SW1	SW2	Package (pcs)
JCR0901202008 *	M12 x 1,5	2 ÷ 5	25	5	14	14	100
JCR0901603008	M16 x 1,5	3 ÷ 9	30	5	17	17	100
JCR0902005008	M20 x 1,5	5 ÷ 13	33,5	6	22	22	100
JCR0902508008	M25 x 1,5	8 ÷ 16	36,5	7	27	27	50
JCR0903212008	M32 x 1,5	12 ÷ 20	38	8	34	34	25
JCR0904016008	M40 x 1,5	16 ÷ 27	41	8	43	43	10
JCR0905021008	M50 x 1,5	21 ÷ 35	49,5	9	55	55	5
JCR0906327008	M63 x 1,5	27 ÷ 48	52,5	10	65	65	5

MATERIAL - SURFACE TREATMENT
Body: OT58 (Brass) nickel-plated
Insert: PA6 (Polyamide)
Sealing ring: TPE (Thermoplastic elastomer)
O-ring: NBR (Nitrile rubber)

PROTECTION GRADE
IP65

SELF-EXTINGUISHING
UL 94 V-2

OPERATING TEMPERATURE
-20°C ÷ 100°C

ACCESSORIES
Multi-hole sealing rings

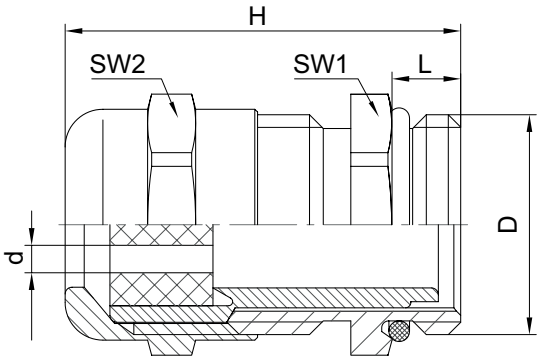

Code	D	no. of Holes x d	H	L	SW1	SW2	Package (pcs)
JCR1601221608	M12 x 1,5	2 x 1,6	25	5	14	14	100
JCR1601624008	M16 x 1,5	2 x 4	30	5	17	17	100
JCR1602024008	M20 x 1,5	2 x 4	33,5	6	22	22	100
JCR1602526008	M25 x 1,5	2 x 6	36,5	7	27	27	50
JCR1603228008	M32 x 1,5	2 x 8	38	8	34	34	25
JCR160404A008	M40 x 1,5	4 x 10	41	8	43	43	10

MATERIAL - SURFACE TREATMENT

Body:	OT58 (Brass) nickel-plated
Insert:	PA6 (Polyamide)
Sealing ring:	CR/NBR (Nitrile chloroprene)
O-ring:	NBR (Nitrile rubber)

PROTECTION GRADE
IP68 - 5 bar
IP69K (tested for M12 - M25 - M50 - M63)

SELF-EXTINGUISHING
UL 94 V-2

OPERATING TEMPERATURE
-20°C ÷ 100°C

CERTIFICATION
VDE 40020901

UL/CSA-FILE
E140310

STANDARD TEST
EN 62444 / UL 514B

USE
For shielded cables

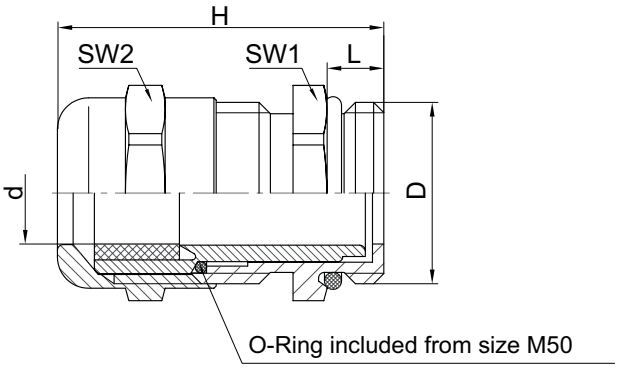

Code	D	d	H	L	Properties	SW1	SW2	Package (pcs)
JCR2801203C08	M12 x 1,5	3 ÷ 6	25	5	Standard thread	14	14	100
JCR2801605C08	M16 x 1,5	5 ÷ 9	30	5	Standard thread	17	17	100
JCR2802009C08	M20 x 1,5	9 ÷ 13	33,5	6	Standard thread	22	22	100
JCR2802511C08	M25 x 1,5	11 ÷ 16	36,5	7	Standard thread	27	27	50
JCR2803214C08	M32 x 1,5	14 ÷ 20	38	8	Standard thread	34	34	25
JCR2804019C08	M40 x 1,5	19 ÷ 27	41	8	Standard thread	43	43	10
JCR2805024C08	M50 x 1,5	24 ÷ 35	49,5	9	Standard thread	55	55	5
JCR2806332C08	M63 x 1,5	32 ÷ 42	52,5	10	Standard thread	65	65	5
JCR2806338C08	M63 x 1,5	38 ÷ 48	52,5	10	Standard thread	65	65	5
JCR2801203L08	M12 x 1,5	3 ÷ 6	30	10	Long thread	14	14	100
JCR2801605L08	M16 x 1,5	5 ÷ 9	35	10	Long thread	17	17	100
JCR2802009L08	M20 x 1,5	9 ÷ 13	37,5	10	Long thread	22	22	100
JCR2802511L08	M25 x 1,5	11 ÷ 16	40,5	11	Long thread	27	27	50
JCR2803214L08	M32 x 1,5	14 ÷ 20	43	13	Long thread	34	34	25
JCR2804019L08	M40 x 1,5	19 ÷ 27	46	13	Long thread	43	43	10
JCR2805024L08	M50 x 1,5	24 ÷ 35	54,5	14	Long thread	55	55	5
JCR2806332L08	M63 x 1,5	32 ÷ 42	56,5	14	Long thread	65	65	5
JCR2806338L08	M63 x 1,5	38 ÷ 48	56,5	14	Long thread	65	65	5

MATERIAL - SURFACE TREATMENT
Body: OT58 (Brass) nickel-plated
Insert: PA6 (Polyamide)
Sealing ring: CR/NBR (Nitrile chloroprene)
Spring: Stainless steel
O-ring: NBR (Nitrile rubber)

PROTECTION GRADE
IP68

SELF-EXTINGUISHING
UL 94 V-2

OPERATING TEMPERATURE
-20°C ÷ 100°C

UL/CSA-FILE
E140310

STANDARD TEST
UL 514B

USE
For shielded cables

NOTES
With contact spring to make installation quicker

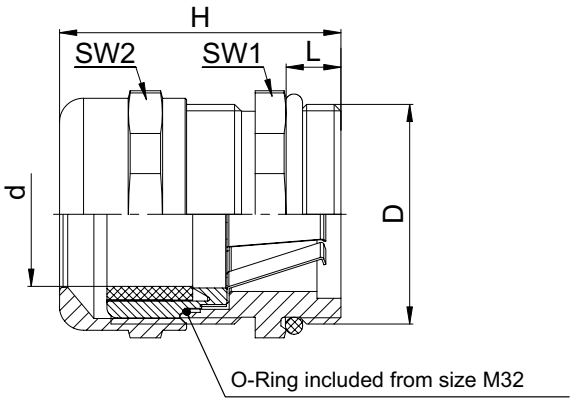

Code	D	d	H	L	Properties	SW1	SW2	Package (pcs)
JCR3101605C08	M16 x 1,5	5 ÷ 9	30	5	Standard thread	17	17	100
JCR3102009C08	M20 x 1,5	9 ÷ 13	33,5	6	Standard thread	22	22	100
JCR3102511C08	M25 x 1,5	11 ÷ 16	36,5	7	Standard thread	27	27	50
JCR3103214C08	M32 x 1,5	14 ÷ 20	38	8	Standard thread	34	34	25
JCR3104019C08	M40 x 1,5	19 ÷ 27	41	8	Standard thread	43	43	10
JCR3105024C08	M50 x 1,5	24 ÷ 35	49,5	9	Standard thread	55	55	5
JCR3106332C08	M63 x 1,5	32 ÷ 42	52,5	10	Standard thread	65	65	5
JCR3101605L08	M16 x 1,5	5 ÷ 9	35	10	Long thread	17	17	100
JCR3102009L08	M20 x 1,5	9 ÷ 13	37,5	10	Long thread	22	22	100
JCR3102511L08	M25 x 1,5	11 ÷ 16	40,5	11	Long thread	27	27	50
JCR3103214L08	M32 x 1,5	14 ÷ 20	43	13	Long thread	34	34	25
JCR3104019L08	M40 x 1,5	19 ÷ 27	46	13	Long thread	43	43	10

PERFECT CABLE GLAND
PG thread

MATERIAL - SURFACE TREATMENT

Body:	OT58 (Brass) nickel-plated
Insert:	PA6 (Polyamide)
Sealing ring:	CR/NBR (Nitrile chloroprene)
O-ring:	NBR (Nitrile rubber)

PROTECTION GRADE
IP68 - 5 bar

SELF-EXTINGUISHING
UL 94 V-2

OPERATING TEMPERATURE
-20°C ÷ 100°C

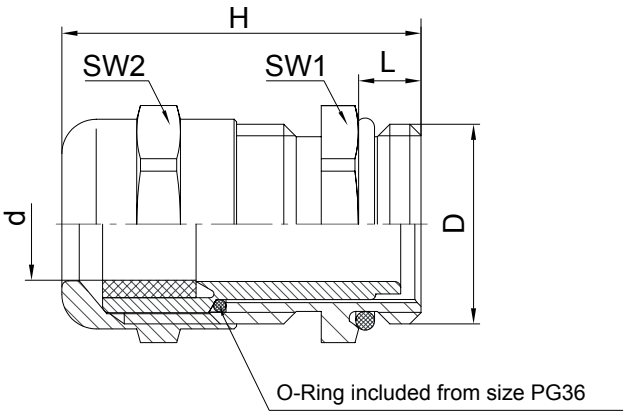

Code	D	d	H	L	Properties	SW1	SW2	Package (pcs)
JCR0100703C08	PG7	3 ÷ 6,5	24	5	Standard thread	14	14	100
JCR0100904C08	PG9	4 ÷ 8	29	6	Standard thread	17	17	100
JCR0101105C08	PG11	5 ÷ 10	29,5	6	Standard thread	20	20	50
JCR0101306C08	PG13,5	6 ÷ 12	31,5	6,5	Standard thread	22	22	50
JCR0101610C08	PG16	10 ÷ 14	31,5	6,5	Standard thread	24	24	50
JCR0102113C08	PG21	13 ÷ 18	34	7	Standard thread	30	30	50
JCR0102918C08	PG29	18 ÷ 25	39	8	Standard thread	40	40	25
JCR0103624C08	PG36	24 ÷ 32	45	9	Standard thread	50	50	10
JCR0104230C08	PG42	30 ÷ 38	49	10	Standard thread	57	57	5
JCR0104834C08	PG48	34 ÷ 44	52	10	Standard thread	64	64	5
JCR0100703L08	PG7	3 ÷ 6,5	34	15	Long thread	14	14	100
JCR0100904L08	PG9	4 ÷ 8	38	15	Long thread	17	17	100
JCR0101105L08	PG11	5 ÷ 10	38,5	15	Long thread	20	20	50
JCR0101306L08	PG13,5	6 ÷ 12	40	15	Long thread	22	22	50
JCR0101610L08	PG16	10 ÷ 14	40	15	Long thread	24	24	50
JCR0102113L08	PG21	13 ÷ 18	42	15	Long thread	30	30	50
JCR0102918L08	PG29	18 ÷ 25	46	15	Long thread	40	40	25

MATERIAL - SURFACE TREATMENT
Body: OT58 (Brass) nickel-plated
Insert: PA6 (Polyamide)
Sealing ring: CR/NBR (Nitrile chloroprene)
O-ring: NBR (Nitrile rubber)

PROTECTION GRADE
IP68 - 5 bar

SELF-EXTINGUISHING
UL 94 V-2

OPERATING TEMPERATURE
-20°C ÷ 100°C

USE
For shielded cables

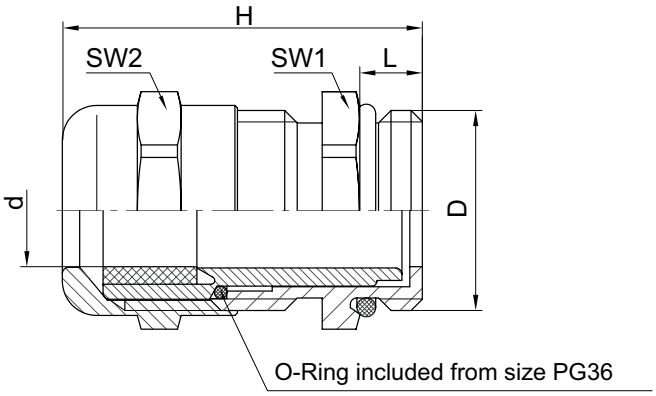

Code	D	d	H	L	SW1	SW2	Package (pcs)
JCR2700703008	PG7	3 ÷ 6,5	24	5	14	14	100
JCR2700904008	PG9	4 ÷ 8	29	6	17	17	100
JCR2701105008	PG11	5 ÷ 10	29,5	6	20	20	100
JCR2701306008	PG13,5	6 ÷ 12	31,5	6,5	22	22	50
JCR2701610008	PG16	10 ÷ 14	31,5	6,5	24	24	50
JCR2702113008	PG21	13 ÷ 18	34	7	30	30	25
JCR2702918008	PG29	18 ÷ 25	39	8	40	40	25
JCR2703624008	PG36	24 ÷ 32	45	9	50	50	10
JCR2704230008	PG42	30 ÷ 38	49	10	57	57	5
JCR2704834008	PG48	34 ÷ 44	52	10	64	64	5

PERFECT CABLE GLAND
metric thread stainless steel

MATERIAL

Body:	AISI303 (Stainless steel)
Insert:	PA6 (Polyamide)
Sealing ring:	CR/NBR (Nitrile chloroprene)
O-ring:	NBR (Nitrile rubber)

PROTECTION GRADE
IP68 - 5 bar
IP69K (tested for M12 - M25 - M50 - M63)

SELF-EXTINGUISHING
UL 94 V-2

OPERATING TEMPERATURE
-20°C ÷ 100°C

UL/CSA-FILE
E140310

STANDARD TEST
UL 514B

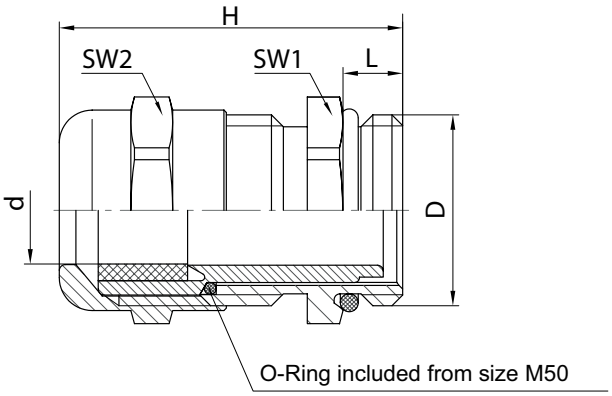

Code	D	d	H	L	SW1	SW2	Package (pcs)
JCR0201203000	M12 x 1,5	3 ÷ 6	25	5	14	14	50
JCR0201605000	M16 x 1,5	5 ÷ 9	30	5	17	17	50
JCR0202009000	M20 x 1,5	9 ÷ 13	33,5	6	22	22	50
JCR0202511000	M25 x 1,5	11 ÷ 16	36,5	7	27	27	50
JCR0203214000	M32 x 1,5	14 ÷ 20	38	8	34	34	25
JCR0204019000	M40 x 1,5	19 ÷ 27	41	8	43	43	10
JCR0205024000	M50 x 1,5	24 ÷ 35	49,5	9	55	55	5
JCR0206332000	M63 x 1,5	32 ÷ 42	52,5	10	65	65	5

MATERIAL
Body: AISI303 (Stainless steel)
Insert: PA6 (Polyamide)
Sealing ring: CR/NBR (Nitrile chloroprene)
O-ring: NBR (Nitrile rubber)

PROTECTION GRADE
IP68
IP69K (tested for M16 - M25)

SELF-EXTINGUISHING
UL 94 V-2

OPERATING TEMPERATURE
-20°C ÷ 100°C

UL/CSA-FILE
E140310

STANDARD TEST
UL 514B

USE
For shielded cables

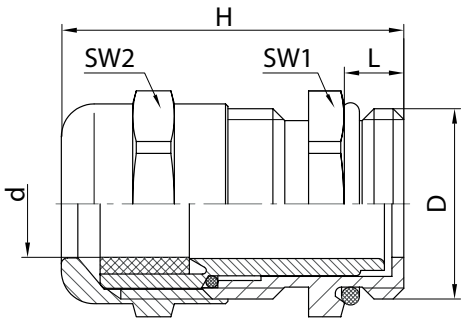

Code	D	d	H	L	SW1	SW2	Package (pcs)
JCR2901605000	M16 x 1,5	5 ÷ 9	30	5	17	17	100
JCR2902009000	M20 x 1,5	9 ÷ 13	33,5	6	22	22	100
JCR2902511000	M25 x 1,5	11 ÷ 16	36,5	7	27	27	50
JCR2903214000	M32 x 1,5	14 ÷ 20	38	8	34	34	25

HEXAGONAL LOCK NUT
metric thread

MATERIAL
OT58 (Brass)

SURFACE TREATMENT
Nickel-plated

OPERATING TEMPERATURE
-60°C ÷ 200°C

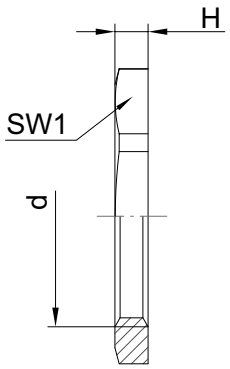

Code	d	H	SW1	Package (pcs)
JCD0801200008	M12 x 1,5	2,8	15	100
JCD0801600008	M16 x 1,5	2,8	19	100
JCD0802000008	M20 x 1,5	3	24	100
JCD0802500008	M25 x 1,5	3,5	30	100
JCD0803200008	M32 x 1,5	4	36	100
JCD0804000008	M40 x 1,5	5	46	50
JCD0805000008	M50 x 1,5	5	60	50
JCD0806300008	M63 x 1,5	6	70	50

MATERIAL
OT58 (Brass)

SURFACE TREATMENT
Nickel-plated

OPERATING TEMPERATURE
-60°C ÷ 200°C

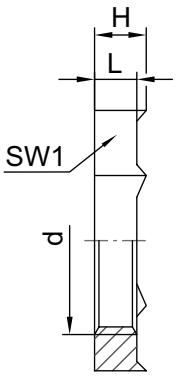

Code	d	H	L	SW1	Package (pcs)
JCD1201200008	M12 x 1,5	3,5	2,8	15	100
JCD1201600008	M16 x 1,5	3,5	2,8	19	100
JCD1202000008	M20 x 1,5	3,7	3	24	100
JCD1202500008	M25 x 1,5	4,2	3,5	30	100
JCD1203200008	M32 x 1,5	4,7	4	36	100
JCD1204000008	M40 x 1,5	5,7	5	46	50
JCD1205000008	M50 x 1,5	5,7	5	60	50

HEXAGONAL LOCK NUT
PG thread

MATERIAL
OT58 (Brass)

SURFACE TREATMENT
Nickel-plated

OPERATING TEMPERATURE
-60°C ÷ 200°C

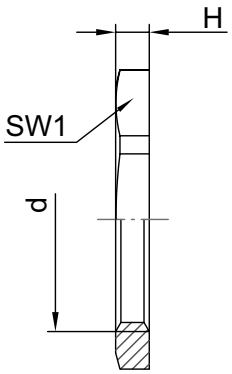

Code	d	H	SW1	Package (pcs)
JCD0100700008	PG7	2,8	15	100
JCD0100900008	PG9	2,8	18	100
JCD0101100008	PG11	3	21	100
JCD0101300008	PG13,5	3	23	100
JCD0101600008	PG16	3	26	100
JCD0102100008	PG21	3,5	32	100
JCD0102900008	PG29	4	41	100
JCD0103600008	PG36	5	51	50
JCD0104200008	PG42	5	60	50
JCD0104800008	PG48	5,5	64	50

MATERIAL
OT58 (Brass)

SURFACE TREATMENT
Nickel-plated

OPERATING TEMPERATURE
-60°C ÷ 200°C

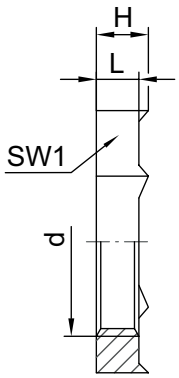

Code	d	H	L	SW1	Package (pcs)
JCD1100700008	PG7	4,7	3,7	15	100
JCD1100900008	PG9	4,7	3,7	18	100
JCD1101100008	PG11	4,7	3,7	21	100
JCD1101300008	PG13,5	4,7	3,7	23	100
JCD1101600008	PG16	4,7	3,7	26	100
JCD1102100008	PG21	5,2	4,2	32	100
JCD1102900008	PG29	5,7	4,7	41	100
JCD1103600008	PG36	6	5	51	50
JCD1104200008	PG42	6	5	60	50
JCD1104800008	PG48	6,5	5,5	64	50

HEXAGONAL LOCK NUT
metric thread stainless steel

MATERIAL
AISI303 (Stainless steel)

OPERATING TEMPERATURE
-60°C ÷ 200°C

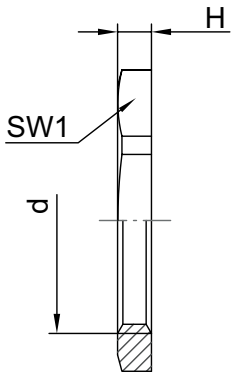

Code	d	H	SW1	Package (pcs)
JCD0701200000	M12 x 1,5	2,8	14	50
JCD0701600000	M16 x 1,5	2,8	19	50
JCD0702000000	M20 x 1,5	3	24	50
JCD0702500000	M25 x 1,5	3,5	30	50
JCD0703200000	M32 x 1,5	4	36	25
JCD0704000000	M40 x 1,5	5	46	10
JCD0705000000	M50 x 1,5	5	60	5
JCD0706300000	M63 x 1,5	6	70	5

MATERIAL - SURFACE TREATMENT
Body: OT58 (Brass) nickel-plated
O-ring: NBR (Nitrile rubber)

PROTECTION GRADE
IP68 - 5 bar

OPERATING TEMPERATURE
-40°C ÷ 100°C

UL/CSA-FILE
E140310

STANDARD TEST
UL 514B

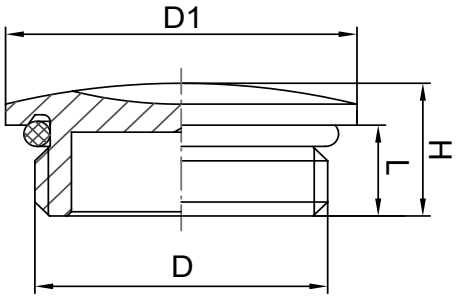

Code	D	D1	H	L	Package (pcs)
JCT0301200008	M12 x 1,5	16	8	5	100
JCT0301600008	M16 x 1,5	20	9	6	100
JCT0302000008	M20 x 1,5	24	9,5	6,5	100
JCT0302500008	M25 x 1,5	28	11	7	100
JCT0303200008	M32 x 1,5	35	12	8	50
JCT0304000008	M40 x 1,5	45	12	8	50
JCT0305000008	M50 x 1,5	55	15	9	25
JCT0306300008	M63 x 1,5	68	16	10	10

THREADED PLUG WITH O-RING
PG thread

MATERIAL - SURFACE TREATMENT
Body: OT58 (Brass) nickel-plated
O-ring: NBR (Nitrile rubber)

PROTECTION GRADE
IP68 - 5 bar

OPERATING TEMPERATURE
-40°C ÷ 100°C

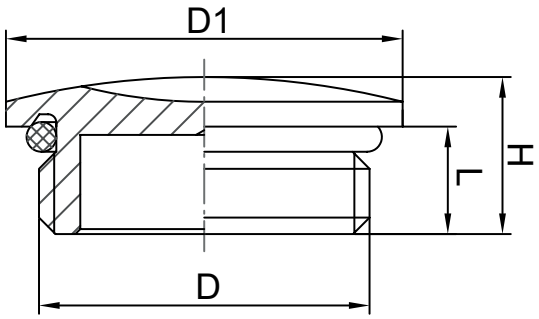

Code	D	D1	H	L	Package (pcs)
JCT0400700008	PG7	16	7	4,5	100
JCT0400900008	PG9	19	8	4,5	100
JCT0401100008	PG11	22	8	4,5	100
JCT0401300008	PG13,5	24	10	6	100
JCT0401600008	PG16	26	10	6	100
JCT0402100008	PG21	32	10	6,5	100
JCT0402900008	PG29	39	12	8	50
JCT0403600008	PG36	50	15	9	25
JCT0404200008	PG42	57	16	10	25
JCT0404800008	PG48	64	16	10	10

MATERIAL - SURFACE TREATMENT
Body: OT58 (Brass) nickel-plated
O-ring: NBR (Nitrile rubber)

PROTECTION GRADE
IP68 - 5 bar

OPERATING TEMPERATURE
-40°C ÷ 100°C

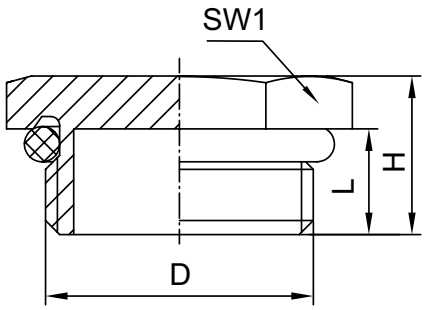

Code	D	H	L	SW1	Package (pcs)
JCT0901200008	M12 x 1,5	7,5	5	14	100
JCT0901600008	M16 x 1,5	8	5	18	100
JCT0902000008	M20 x 1,5	9	6	22	100
JCT0902500008	M25 x 1,5	10	6,5	28	100
JCT0903200008	M32 x 1,5	10,5	7	35	50
JCT0904000008	M40 x 1,5	12	8	44	50

PRESSURE CHECK VALVE
metric thread stainless steel

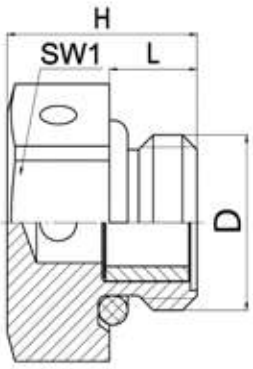

MATERIAL
Body: AISI303 (Stainless steel)
Diaphragm: PES (Polyethersulfone)
O-ring: NBR (Nitrile rubber)

PROTECTION GRADE
IP66
IP68 - 0,6 bar (60 min)
IP69

AIR PASSAGE
> 400 ml / min / cm² a Δp = 0,07 bar

WATER PASSAGE
≥ 0,83 bar (30 sec)

OPERATING TEMPERATURE
-40°C ÷ 100°C

USE
Protection for electro-technical and electronic enclosures against condensation due to temperature and pressure variations.

NOTES
Ventilation and continuous adaptation to the internal pressure.The venting element does not work if blocked by dust or submerged in water.

Code	D	H	L	SW1	Package (pcs)
JCT1301200000	M12 x 1,5	13	6	17	25
JCT1302000000	M20 x 1,5	13	6	24	10
JCT1304000000	M40 x 1,5	18	8	45	5

MATERIAL
TPE (Thermoplastic elastomer)

COLOUR
NE Black

OPERATING TEMPERATURE
-30°C ÷ 100°C

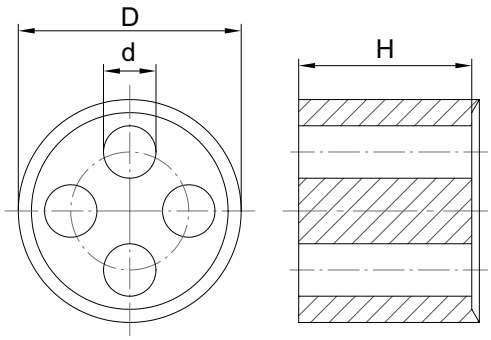

Code NE	Measure	no. of Holes x d	D	H	Package (pcs)
JCG01012216N8	M12	2 x 1,6	8,5	6,6	50
JCG01012323N8	M12	3 x 2,3	8,5	6,6	50
JCG01012420N8	M12	4 x 2	8,5	6,6	50
JCG01016240N8	M16	2 x 4	11,7	7,6	50
JCG01016245N8	M16	2 x 4,5	11,7	7,6	50
JCG01016423N8	M16	4 x 2,3	11,7	7,6	50
JCG01016435N8	M16	4 x 3,5	11,7	7,6	50
JCG01020240N8	M20	2 x 4	15,1	7,5	50
JCG01020260N8	M20	2 x 6	15,1	7,5	50
JCG01020450N8	M20	4 x 5	15,1	7,5	50
JCG01025260N8	M25	2 x 6	19,8	9,3	50
JCG01025280N8	M25	2 x 8	19,8	9,3	50
JCG01025340N8	M25	3 x 4	19,8	9,3	50
JCG01025360N8	M25	3 x 6	19,8	9,3	50
JCG01025370N8	M25	3 x 7	19,8	9,3	50
JCG01025450N8	M25	4 x 5	19,8	9,3	50
JCG01025460N8	M25	4 x 6	19,8	9,3	50
JCG01025465N8	M25	4 x 6,5	19,8	9,3	50
JCG01025540N8	M25	5 x 4	19,8	9,3	50
JCG01025640N8	M25	6 x 4	19,8	9,3	50
JCG01032280N8	M32	2 x 8	25,1	12,5	25
JCG01032380N8	M32	3 x 8	25,1	12,5	25
JCG01032470N8	M32	4 x 7	25,1	12,5	25
JCG01032480N8	M32	4 x 8	25,1	12,5	25
JCG01032485N8	M32	4 x 8,5	25,1	12,5	25
JCG01032640N8	M32	6 x 4	25,1	12,5	25
JCG01032660N8	M32	6 x 6	25,1	12,5	25
JCG010404A0N8	M40	4 x 10	32,3	15	10
JCG01040585N8	M40	5 x 8,5	32,3	15	10
JCG01040865N8	M40	8 x 6,5	32,3	15	10

MULTI-HOLE SEALING RING
PG

MATERIAL
TPE (Thermoplastic elastomer)

COLOUR
NE Black

OPERATING TEMPERATURE
-30°C ÷ 100°C

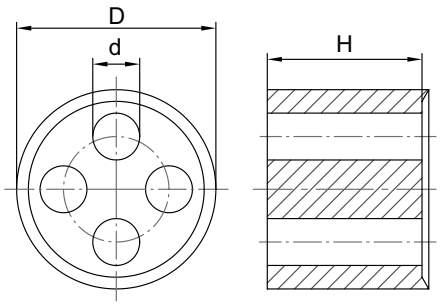

Code NE	Measure	no. of Holes x d	D	H	Package (pcs)
JCG02009230N8	PG9	2 x 3	10,6	7,5	10
JCG02009235N8	PG9	2 x 3,5	10,6	7,5	10
JCG02009320N8	PG9	3 x 2	10,6	7,5	10
JCG02009335N8	PG9	3 x 3,5	10,6	7,5	10
JCG02009420N8	PG9	4 x 2	10,6	7,5	10
JCG02009430N8	PG9	4 x 3	10,6	7,5	10
JCG02011230N8	PG11	2 x 3	13,3	8,5	10
JCG02011240N8	PG11	2 x 4	13,3	8,5	10
JCG02011245N8	PG11	2 x 4,5	13,3	8,5	10
JCG02011250N8	PG11	2 x 5	13,3	8,5	10
JCG02011330N8	PG11	3 x 3	13,3	8,5	10
JCG02011340N8	PG11	3 x 4	13,3	8,5	10
JCG02011350N8	PG11	3 x 5	13,3	8,5	10
JCG02011430N8	PG11	4 x 3	13,3	8,5	10
JCG02011727N8	PG11	7 x 2,7	13,3	8,5	10
JCG02013245N8	PG13,5	2 x 4,5	15,3	8,5	10
JCG02013250N8	PG13,5	2 x 5	15,3	8,5	10
JCG02013260N8	PG13,5	2 x 6	15,3	8,5	10
JCG02013340N8	PG13,5	3 x 4	15,3	8,5	10
JCG02013350N8	PG13,5	3 x 5	15,3	8,5	10
JCG02016240N8	PG16	2 x 4	17,4	9	10
JCG02016260N8	PG16	2 x 6	17,4	9	10
JCG02016340N8	PG16	3 x 4	17,4	9	10
JCG02016345N8	PG16	3 x 4,5	17,4	9	10
JCG02016350N8	PG16	3 x 5	17,4	9	10
JCG02016360N8	PG16	3 x 6	17,4	9	10
JCG02016365N8	PG16	3 x 6,5	17,4	9	10
JCG02016370N8	PG16	3 x 7	17,4	9	10
JCG02016440N8	PG16	4 x 4	17,4	9	10
JCG02016450N8	PG16	4 x 5	17,4	9	10
JCG02016460N8	PG16	4 x 6	17,4	9	10
JCG02016540N8	PG16	5 x 4	17,4	9	10
JCG02016175N8	PG16	1 x 7,5 / 1 x 5,5	17,4	9	10
JCG02021270N8	PG21	2 x 7	22,2	11	10
JCG02021280N8	PG21	2 x 8	22,2	11	10
JCG02021290N8	PG21	2 x 9	22,2	11	10
JCG02021370N8	PG21	3 x 7	22,2	11	10
JCG02021380N8	PG21	3 x 8	22,2	11	10
JCG02021450N8	PG21	4 x 5	22,2	11	10
JCG02021465N8	PG21	4 x 6,5	22,2	11	10
JCG02021470N8	PG21	4 x 7	22,2	11	10
JCG02021475N8	PG21	4 x 7,5	22,2	11	10
JCG02021550N8	PG21	5 x 5	22,2	11	10
JCG02029585N8	PG29	5 x 8,5	29,8	13	10
JCG02029650N8	PG29	6 x 5	29,8	13	10
JCG02029675N8	PG29	6 x 7,5	29,8	13	10
JCG02029850N8	PG29	8 x 5	29,8	13	10

MATERIAL
PA6.6 (Polyamide)

COLOUR
NE Black

SELF-EXTINGUISHING
UL 94 V-2

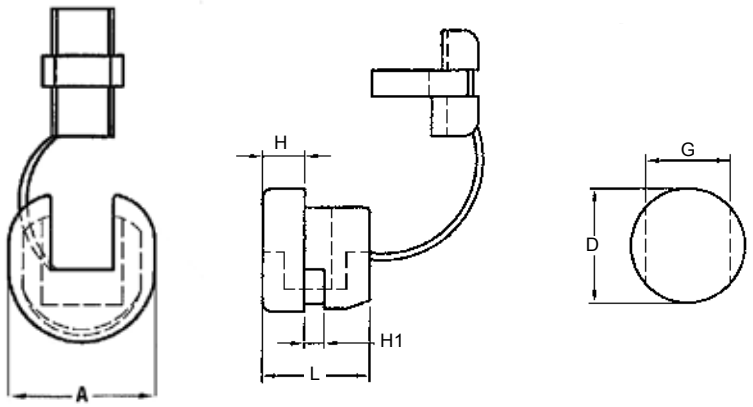

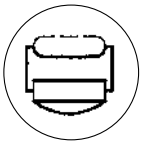

TYPE 1
FLAT CABLE

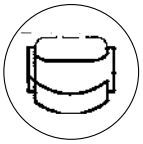

TYPE 2
FLAT CABLE

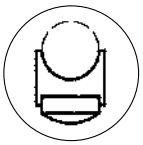

TYPE 3
ROUND CABLE

Code NE	Type	Cable section	D	G	H1	A	L	H	Package (pcs)
KGS57002P04N8	1	3 x 5,6	9,5	8,7	0,8 ÷ 1,6	10,4	10,4	4	1.000
KGS57003P04N8	1	3 x 5,6	11	9,9	0,8 ÷ 1,6	11,5	10,4	4	1.000
KGS57003W01N8	1	3 x 5,6	11	9,9	1,9 ÷ 2,5	11,5	10,4	4	1.000
KGS57004N04N8	1	3,7 / 3,8 x 7,6	12,7 / 13,1	11,8	0,8 ÷ 1,6	13,3	10,4	4	1.000
KGS57004K04N8	1	3,7 / 3,8 x 7,6	12,7 / 13,1	11,8	1,9 ÷ 2,5	13,3	10,5	4	1.000
KGS57SB5F04N8	1	5 x 10	14,3	13,4	0,8 ÷ 1,6	15,5	15,4	6,2	1.000
KGS57SB5F06N8	1	5 x 10	14,3	13,4	1,8 ÷ 3,2	15,5	15,4	6,2	1000
KGS57SB6P44N8	2	3 x 7,6 / 4,1 x 10,4	15,9	14	2 ÷ 2,5	16,5	14,9	5,8	1.000
KGS57SB4F02N8	2	4,1 x 8,6	12,7	11,8	1,8 ÷ 2,5	14,0	12,4	4	1.000
KGS59007N02N8	3	ø 9,2 ÷ 11	19 / 19,8	16,5	0,8 ÷ 1,6	19,5	19,1	7,8	1.000
KGS59007P02N8	3	ø 9,2 ÷ 11	19 / 19,8	16,5	1,9 ÷ 3,2	19,5	19,4	7,8	1.000
KGS58002P01N8	3	ø 3 ÷ 4,7	9,5	8,4	0,8 ÷ 1,6	10,4	10,4	4	1.000
KGS58005N04N8	3	ø 6,4 ÷ 7,4	12,7 / 13,1	11,5	0,8 ÷ 1,6	13,5	10,9	4,2	1.000
KGS58005P04N8	3	ø 6,4 ÷ 7,4	12,7 / 13,1	11,5	1,9 ÷ 2,5	13,5	10,9	4,2	1.000
KGS58006N04N8	3	ø 7,6	15,9	14	0,8 ÷ 1,6	16,8	14,8	5,6	1.000
KGS58006P04N8	3	ø 7,6	15,9	14	1,9 ÷ 3,2	16,8	14,8	5,6	1.000
KGS5806N304N8	3	ø 8,2 ÷ 9,2	15,9	14	0,8 ÷ 1,6	16,2	15	5,6	1.000
KGS5806P304N8	3	ø 8,2 ÷ 9,2	15,9	14	1,9 ÷ 3,2	16,2	14,8	5,7	1.000
KGS58SB5R04N8	3	ø 8,2 ÷ 9,2 / 7,6	13,1 / 12,7	11,5	0,8 ÷ 1,6	13,4	10,9	4,2	1.000
KGS58SB6R06N8	3	ø 8,2 ÷ 9,2	15,9	14	0,8 ÷ 1,6	16,6	14,6	5,6	1.000
KGS58SB8R02N8	3	ø 13,5 ÷ 15,2	22	21,7	1,8 ÷ 2,5	22,6	20,4	8,4	1.000
KGS58SB9R02N8	3	ø 15,2 ÷ 16,3 / 17,5	28 ÷ 30,2	25,4	1,2 ÷ 7	27,5	25,2	10,6	1.000

HEXAGONAL REDUCTION
metric thread

MATERIAL - SURFACE TREATMENT
Body: OT58 (Brass) nickel-plated
O-ring: NBR (Nitrile rubber)

PROTECTION GRADE
IP68 max

OPERATING TEMPERATURE
-40°C ÷ 100°C

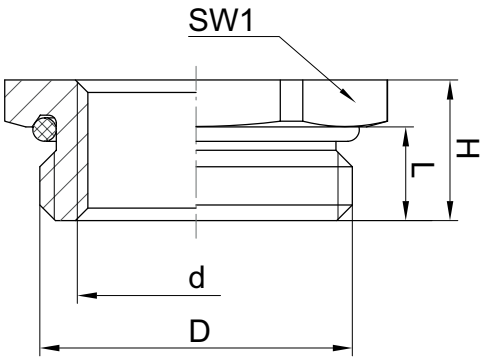

Code	D	d	H	L	SW1	Package (pcs)
JCA0501601208	M16 x 1,5	M12 x 1,5	8	5	17	100
JCA0502001208	M20 x 1,5	M12 x 1,5	9	6	22	100
JCA0502001608	M20 x 1,5	M16 x 1,5	9	6	22	100
JCA0502501608	M25 x 1,5	M16 x 1,5	10	7	27	100
JCA0502502008	M25 x 1,5	M20 x 1,5	10	7	27	100
JCA0503201608	M32 x 1,5	M16 x 1,5	11	8	34	50
JCA0503202008	M32 x 1,5	M20 x 1,5	11	8	34	50
JCA0503202508	M32 x 1,5	M25 x 1,5	11	8	34	50
JCA0504002008	M40 x 1,5	M20 x 1,5	12	8	43	25
JCA0504002508	M40 x 1,5	M25 x 1,5	12	8	43	25
JCA0504003208	M40 x 1,5	M32 x 1,5	12	8	43	25
JCA0505002508	M50 x 1,5	M25 x 1,5	13	9	55	10
JCA0505003208	M50 x 1,5	M32 x 1,5	13	9	55	10
JCA0505004008	M50 x 1,5	M40 x 1,5	13	9	55	10
JCA0506303208	M63 x 1,5	M32 x 1,5	14	10	65	10
JCA0506304008	M63 x 1,5	M40 x 1,5	14	10	65	10
JCA0506305008	M63 x 1,5	M50 x 1,5	14	10	65	10

MATERIAL - SURFACE TREATMENT
Body: OT58 (Brass) nickel-plated
O-ring: NBR (Nitrile rubber)

PROTECTION GRADE
IP68 max

OPERATING TEMPERATURE
-40°C ÷ 100°C

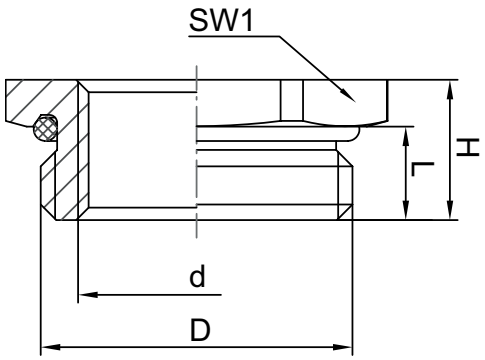

Code	D	d	H	L	SW1	Package (pcs)
JCA0400900708	PG9	PG7	8,5	6	18	100
JCA0401100708	PG11	PG7	8,5	6	20	100
JCA0401100908	PG11	PG9	8,5	6	20	100
JCA0401300708	PG13,5	PG7	9,5	6,5	24	100
JCA0401300908	PG13,5	PG9	9,5	6,5	24	100
JCA0401301108	PG13,5	PG11	9,5	6,5	24	100
JCA0401600708	PG16	PG7	9,5	6,5	24	100
JCA0401600908	PG16	PG9	9,5	6,5	24	100
JCA0401601108	PG16	PG11	9,5	6,5	24	100
JCA0401601308	PG16	PG13,5	9,5	6,5	24	100
JCA0402101108	PG21	PG11	10	7	32	100
JCA0402101308	PG21	PG13,5	10	7	32	100
JCA0402101608	PG21	PG16	10	7	32	100
JCA0402901608	PG29	PG16	11,5	8	41	50
JCA0402902108	PG29	PG21	11,5	8	41	50
JCA0403602108	PG36	PG21	12,5	9	50	25
JCA0403602908	PG36	PG29	12,5	9	50	25
JCA0404203608	PG42	PG36	14	10	60	25

KNURLED REDUCTION
metric thread

MATERIAL
OT58 (Brass)

SURFACE TREATMENT
Nickel-plated

OPERATING TEMPERATURE
-60°C ÷ 200°C

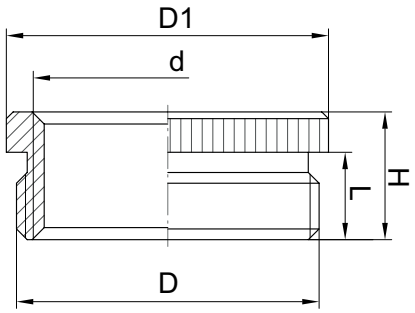

Code	D	d	D1	H	L	Package (pcs)
JCA0101601208	M16 x 1,5	M12 x 1,5	20	8,5	6	100
JCA0102001208	M20 x 1,5	M12 x 1,5	24	9	6,5	100
JCA0102001608	M20 x 1,5	M16 x 1,5	24	9	6,5	100
JCA0102501608	M25 x 1,5	M16 x 1,5	30	10	7	100
JCA0102502008	M25 x 1,5	M20 x 1,5	30	10	7	100
JCA0103202008	M32 x 1,5	M20 x 1,5	39	11,5	8	50
JCA0103202508	M32 x 1,5	M25 x 1,5	39	11,5	8	50
JCA0104002508	M40 x 1,5	M25 x 1,5	50	12,5	9	25
JCA0104003208	M40 x 1,5	M32 x 1,5	50	12,5	9	25
JCA0105003208	M50 x 1,5	M32 x 1,5	57	14	10	10
JCA0105004008	M50 x 1,5	M40 x 1,5	57	14	10	10
JCA0106304008	M63 x 1,5	M40 x 1,5	70	14	10	10
JCA0106305008	M63 x 1,5	M50 x 1,5	70	14	10	10

MATERIAL
OT58 (Brass)

SURFACE TREATMENT
Nickel-plated

OPERATING TEMPERATURE
-60°C ÷ 200°C

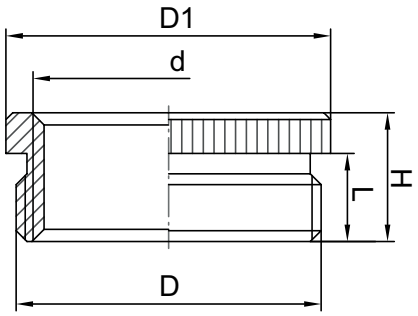

Code	D	d	D1	H	L	Package (pcs)
JCA0200900708	PG9	PG7	17	8,5	6	100
JCA0201100708	PG11	PG7	20	8,5	6	100
JCA0201100908	PG11	PG9	20	8,5	6	100
JCA0201300708	PG13,5	PG7	22	9	6,5	100
JCA0201300908	PG13,5	PG9	22	9	6,5	100
JCA0201301108	PG13,5	PG11	22	9	6,5	100
JCA0201600708	PG16	PG7	24	9,5	6,5	100
JCA0201600908	PG16	PG9	24	9,5	6,5	100
JCA0201601108	PG16	PG11	24	9,5	6,5	100
JCA0201601308	PG16	PG13,5	24	9,5	6,5	100
JCA0202101108	PG21	PG11	30	10	7	100
JCA0202101308	PG21	PG13,5	30	10	7	100
JCA0202101608	PG21	PG16	30	10	7	100
JCA0202901608	PG29	PG16	39	11,5	8	50
JCA0202902108	PG29	PG21	39	11,5	8	50
JCA0203602108	PG36	PG21	50	12,5	9	25
JCA0203602908	PG36	PG29	50	12,5	9	25
JCA0204202908	PG42	PG29	57	14	10	10
JCA0204203608	PG42	PG36	57	14	10	10
JCA0204803608	PG48	PG36	64	14	10	10
JCA0204804208	PG48	PG42	64	14	10	10

HEXAGONAL REDUCTION
metric - PG

MATERIAL - SURFACE TREATMENT
Body: OT58 (Brass) nickel-plated
O-ring: NBR (Nitrile rubber)

PROTECTION GRADE
IP68 max

OPERATING TEMPERATURE
-40°C ÷ 100°C

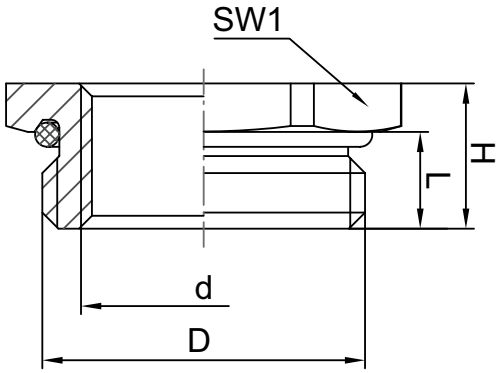

Code	D	d	H	L	SW1	Package (pcs)
JCA0301600708	M16 x 1,5	PG7	8	5	17	100
JCA0302000908	M20 x 1,5	PG9	9	6	22	100
JCA0302500908	M25 x 1,5	PG9	10	7	27	100
JCA0302501108	M25 x 1,5	PG11	10	7	27	100
JCA0302501308	M25 x 1,5	PG13,5	10	7	27	100
JCA0303201308	M32 x 1,5	PG13,5	11	8	34	50
JCA0303201608	M32 x 1,5	PG16	11	8	34	50
JCA0303202108	M32 x 1,5	PG21	11	8	34	50
JCA0304001608	M40 x 1,5	PG16	12	8	43	25
JCA0304002108	M40 x 1,5	PG21	12	8	43	25
JCA0304002908	M40 x 1,5	PG29	12	8	43	25
JCA0305002108	M50 x 1,5	PG21	13	9	55	25
JCA0305002908	M50 x 1,5	PG29	13	9	55	10
JCA0305003608	M50 x 1,5	PG36	13	9	55	10
JCA0306302908	M63 x 1,5	PG29	14	10	65	10
JCA0306303608	M63 x 1,5	PG36	14	10	65	10
JCA0306304208	M63 x 1,5	PG42	14	10	65	10

MATERIAL
OT58 (Brass)

SURFACE TREATMENT
Nickel-plated

OPERATING TEMPERATURE
-60°C ÷ 200°C

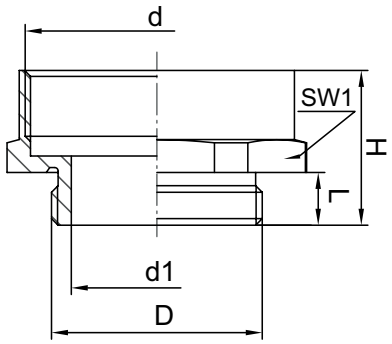

Code	D	d	d1	H	L	SW1	Package (pcs)
JCA1801201608	M12 x 1,5	M16 x 1,5	8	16	5	18	100
JCA1801602008	M16 x 1,5	M20 x 1,5	12	16,5	5	22	100
JCA1802002508	M20 x 1,5	M25 x 1,5	15	18,5	6	27	50
JCA1802503208	M25 x 1,5	M32 x 1,5	21	20,5	7	34	25
JCA1803204008	M32 x 1,5	M40 x 1,5	26	23,5	8	42	25
JCA1804005008	M40 x 1,5	M50 x 1,5	34	30	8	52	10
JCA1805006308	M50 x 1,5	M63 x 1,5	44	32,5	9	65	10

HEXAGONAL ADAPTER
metric - PG

MATERIAL
OT58 (Brass)

SURFACE TREATMENT
Nickel-plated

OPERATING TEMPERATURE
-60°C ÷ 200°C

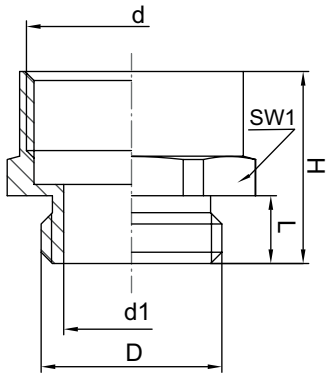

Code	D	d	d1	H	L	SW1	Package (pcs)
JCA1301200708	M12 x 1,5	PG7	8	16	6	14	100
JCA1301200908	M12 x 1,5	PG9	8,2	16,5	6	17	100
JCA1301601108	M16 x 1,5	PG11	12	17	6	20	100
JCA1302001108	M20 x 1,5	PG11	15	17,5	6,5	22	100
JCA1302001308	M20 x 1,5	PG13,5	16	19	6,5	22	100
JCA1302501608	M25 x 1,5	PG16	18,5	20,5	7	27	50
JCA1302502108	M25 x 1,5	PG21	21	22	7	30	50
JCA1303202908	M32 x 1,5	PG29	27,5	24,5	8	40	25
JCA1304002908	M40 x 1,5	PG29	32	24,5	8	43	25
JCA1305003608	M50 x 1,5	PG36	42	28,5	9	55	10
JCA1305004208	M50 x 1,5	PG42	44	31	9	57	5
JCA1306304808	M63 x 1,5	PG48	52,5	33	10	65	5

MATERIAL
OT58 (Brass)

SURFACE TREATMENT
Nickel-plated

OPERATING TEMPERATURE
-60°C ÷ 200°C

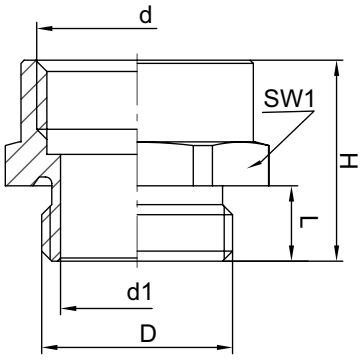

Code	D	d	d1	H	L	SW1	Package (pcs)
JCA1200701208	PG7	M12 x 1,5	9	15	5	14	100
JCA1200901608	PG9	M16 x 1,5	12,2	16	6	19	100
JCA1201101608	PG11	M16 x 1,5	13	16	6	22	100
JCA1201302008	PG13,5	M20 x 1,5	16	17,5	6,5	24	100
JCA1201602008	PG16	M20 x 1,5	18,5	17,5	6,5	27	100
JCA1201602508	PG16	M25 x 1,5	18,5	18,5	6,5	30	100
JCA1202102508	PG21	M25 x 1,5	23	19	7	32	50
JCA1202103208	PG21	M32 x 1,5	23	20	7	36	50
JCA1202904008	PG29	M40 x 1,5	32	21	8	43	50
JCA1203605008	PG36	M50 x 1,5	42	23	9	55	25
JCA1204206308	PG42	M63 x 1,5	48	25	10	65	10

KNURLED ADAPTER
PG - metric

MATERIAL
OT58 (Brass)

SURFACE TREATMENT
Nickel-plated

OPERATING TEMPERATURE
-60°C ÷ 200°C

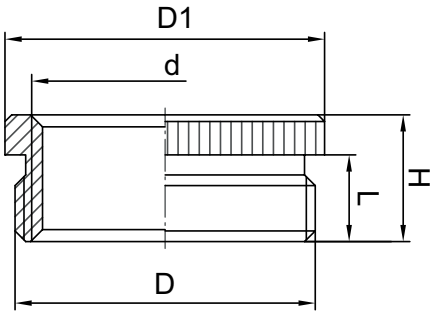

Code	D	d	D1	H	L	Package (pcs)
JCA1101602008	PG16	M20 x 1,5	24	9,5	6,5	100
JCA1102102508	PG21	M25 x 1,5	30	10	7	100
JCA1102902508	PG29	M25 x 1,5	39	11,5	8	50

MATERIAL - SURFACE TREATMENT
Body: OT58 (Brass) nickel-plated
O-ring: NBR (Nitrile rubber)

PROTECTION GRADE
IP68 max

OPERATING TEMPERATURE
-40°C ÷ 100°C

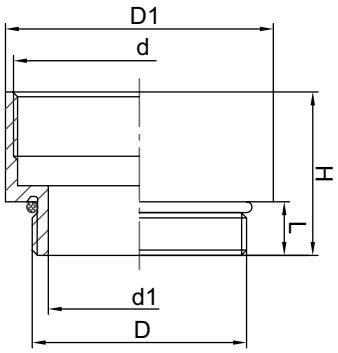

Code	D	d	D1	d1	H	L	Package (pcs)
JCA1601200908	M12 x 1,5	PG9	17	8	16	5	100
JCA1601601108	M16 x 1,5	PG11	20	12	16,5	5	100
JCA1602001608	M20 x 1,5	PG16	24	15	19,5	6	100
JCA1602502108	M25 x 1,5	PG21	30	21	21,5	7	50
JCA1603202908	M32 x 1,5	PG29	39	26	25	8	50
JCA1604003608	M40 x 1,5	PG36	50	34	28,5	8	25
JCA1605004208	M50 x 1,5	PG42	57	44	32	9	10
JCA1605004808	M50 x 1,5	PG48	64	44	33	9	10

PRESSURE SCREW
metric thread

MATERIAL
OT58 (Brass)

SURFACE TREATMENT
Nickel-plated

OPERATING TEMPERATURE
-60°C ÷ 200°C

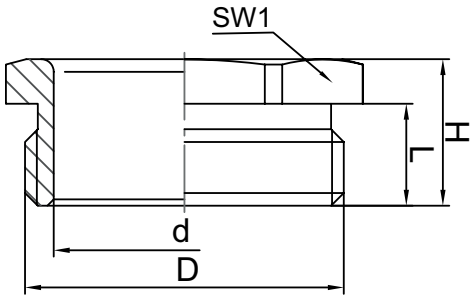

Code	D	d	H	L	SW1	Package (pcs)
JCA2801208008	M12 x 1,5	8,5	8,5	6	12	10
JCA2801612008	M16 x 1,5	12,5	8,5	6	16	10
JCA2802015008	M20 x 1,5	15,5	10,5	7,5	20	10
JCA2802520008	M25 x 1,5	20,5	11,5	8	25	10
JCA2803227008	M32 x 1,5	27,5	12	8	32	10

2

ELECTRIC TERMINALS

Terminals
page 2.1

Connectors
page 2.6

Cable lugs
page 2.17

Terminals not insulated
page 2.20

Terminal Block
page 2.22

Tools
page 2.23

SINGLE FERRULE
insulated

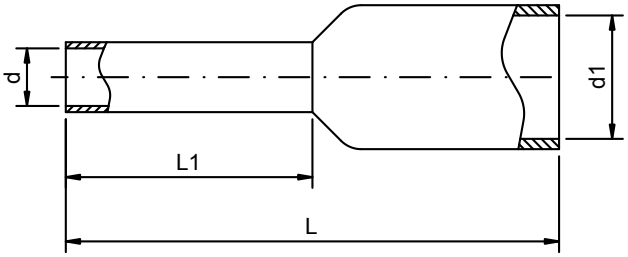

MATERIAL
CU-ETP 99,9% (Tin-plated copper)

INSULATION
PP (Polypropylene)

COLOUR
See table

FLAMMABILITY RATING
105°C max

CERTIFICATION
CSA (File 268879)
RoHS

ACCESSORIES
Crimp tool CBU000MPAE16T

Code	Colour DIN 46228/4	Code	Colour	Code	Colour	Cable section mm²	d	d1	L	L1	Package (pcs)
				CB00TPO1408GR	GR Grey	0,14	0,7	1,6	10	8	500
				CB000TPO306AZ	AZ Light blue	0,25	0,75	1,8	10	6	500
				CB000TPO308AZ	AZ Light blue	0,25	0,75	1,8	12	8	500
				CB000TPO348AZ	AZ Light blue	0,34	0,8	2	12	8	500
CB0000TPD0506	BI White					0,5	1	2,6	12	6	500
CB0000TPD0508	BI White			CB000TPO508AR	AR Orange	0,5	1	2,6	14	8	500
CB0000TPD0510	BI White			CB000TPO510AR	AR Orange	0,5	1	2,6	16	10	500
CB0000TPD7506	GR Grey					0,75	1,2	2,8	12	6	500
CB0000TPD7508	GR Grey	CB000TP0758BL	BL Blue	CB00TPO7508BI	BI White	0,75	1,2	2,8	14	8	500
CB0000TPD7510	GR Grey					0,75	1,2	2,8	16	10	500
CB0000TPD7512	GR Grey			CB00TPO7512BI	BI White	0,75	1,2	2,8	18	12	500
CB0000TPD0106	RO Red					1	1,4	3	12	6	500
CB0000TPD0108	RO Red			CB000TPO108GI	GI Yellow	1	1,4	3	14	8	500
CB0000TPD0110	RO Red					1	1,4	3	16	10	500
CB0000TPD0112	RO Red			CB000TPO112GI	GI Yellow	1	1,4	3	18	12	500
CB0000TPD1508	NE Black			CB00TPO1508RO	RO Red	1,5	1,7	3,5	14	8	500
CB0000TPD1510	NE Black			CB00TPO1510RO	RO Red	1,5	1,7	3,5	16	10	500
CB0000TPD1512	NE Black					1,5	1,7	3,5	18	12	500
CB0000TPD1518	NE Black			CB00TPO1518RO	RO Red	1,5	1,7	3,5	24	18	500
CB0000TPD2508	BL Blue	CB000TP2508GR	GR Grey			2,5	2,2	4,2	14	8	500
CB0000TPD2512	BL Blue	CB000TP2512GR	GR Grey			2,5	2,2	4,2	18	12	500
CB0000TPD2518	BL Blue	CB000TP2518GR	GR Grey			2,5	2,2	4,2	24	18	500
CB0000TPD0410	GR Grey	CB0000TP410AR	AR Orange			4	2,8	4,8	17	10	500
		CB0000TP412AR	AR Orange	CB000TPO412GR	GR Grey	4	2,8	4,8	20	12	500
CB0000TPD0418	GR Grey	CB0000TP418AR	AR Orange			4	2,8	4,8	26	18	200
CB0000TPD0612	GI Yellow	CB0000TP612VE	VE Green	CB000TPO612NR	NE Black	6	3,5	6,3	20	12	100
CB0000TPD0618	GI Yellow	CB0000TP618VE	VE Green	CB000TPO618NR	NE Black	6	3,5	6,3	26	18	100
CB0000TPD1012	RO Red	CB000TP1012MA	MA Brown	CB00TPO1012AV	BE Beige	10	4,5	7,6	22	12	100
CB0000TPD1018	RO Red	CB000TP1018MA	MA Brown	CB00TPO1018AV	BE Beige	10	4,5	7,6	28	18	100
CB0000TPD1612	BL Blue	CB000TP1612BI	BI White	CB00TPO1612VE	VE Green	16	5,8	8,8	24	12	100
CB0000TPD1618	BL Blue	CB000TP1618BI	BI White	CB00TPO1618VE	VE Green	16	5,8	8,8	28	18	100
CB000TPD25016	GI Yellow	CB000TP2516NR	NE Black	CB0TPO25016MA	MA Brown	25	7,3	11,2	30	16	50
CB000TPD25022	GI Yellow	CB000TP2522NR	NE Black	CB0TPO25022MA	MA Brown	25	7,3	11,2	36	22	50
CB000TPD35016	RO Red			CB0TPO35016NO	MN Brown	35	8,3	12,7	30	16	50
CB000TPD35025	RO Red			CB0TPO35025NO	MN Brown	35	8,3	12,7	39	25	50
CB000TPD50020	BL Blue			CB0TPO50020VE	VE Green	50	10,3	15	36	20	50
CB000TPD50025	BL Blue			CB0TPO50025VS	VE Green	50	10,3	15	40	25	50
				CB0TPO70022GI	GI Yellow	70	13,5	16	37	21	25
				CB0TPO95025RO	RO Red	95	14,5	18	44	25	25
				CBTPO120027BL	BL Blue	120	16,5	20	48	27	25

MATERIAL
CU-ETP 99,9% (Tin-plated copper)

INSULATION
PP (Polypropylene)

COLOUR
See table

FLAMMABILITY RATING
105°C max

CERTIFICATION
CSA (File 268879)
RoHS

ACCESSORIES
Crimp tool CBU000MPAE16T

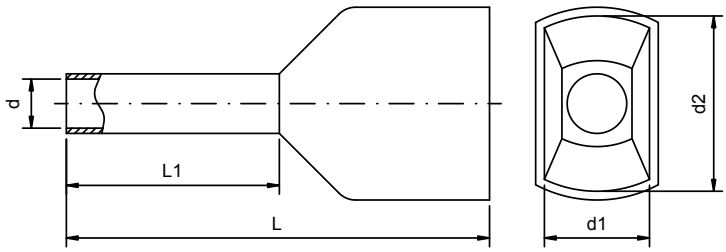

Code	Colour DIN 46228/4	Code	Colour	Code	Colour	Cable section mm²	d	d1	d2	L	L1	Package (pcs)
CB000TPT508BI	BI White			**CB00TP2T508AR**	AR Orange	2 x 0,5	1,4	2,5	4,7	15	8	200
CB000TPT758GR	GR Grey	**CB00TP1T758BL**	BL Blue	**CB00TP2T758BI**	BI White	2 x 0,75	1,7	2,8	5	15	8	200
CB00TPT7510GR	GR Grey	**CB0TP1T7510BL**	BL Blue	**CB0TP2T7510BI**	BI White	2 x 0,75	1,7	2,8	5	17	10	200
CB000TPT108RO	RO Red			**CB00TP2T108GI**	GI Yellow	2 x 1	2	3,4	5,4	15	8	200
CB000TPT110RO	RO Red			**CB00TP2T110GI**	GI Yellow	2 x 1	2	3,4	5,4	17	10	200
CB00TPT1508NR	NE Black			**CB0TP2T1508RO**	RO Red	2 x 1,5	2,2	3,6	6,6	16	8	200
CB00TPT1512NR	NE Black			**CB0TP2T1512RO**	RO Red	2 x 1,5	2,2	3,6	6,6	20	12	200
CB00TPT2510BL	BL Blue	**CB0TP1T2510GR**	GR Grey			2 x 2,5	2,8	4,2	7,8	18,5	10	100
CB00TPT2512BL	BL Blue	**CB0TP1T2512GR**	GR Grey			2 x 2,5	2,8	4,2	7,8	21,5	13	100
CB000TPT412GR	GR Grey	**CB00TP1T412AR**	AR Orange			2 x 4	3,7	4,9	8,8	23	12	100
CB000TPT614GI	GI Yellow	**CB00TP1T614VE**	VE Green	**CB00TP2T614NR**	NE Black	2 x 6	4,8	6,9	10	26	14	50
CB00TPT1014RO	RO Red	**CB0TP1T1014MA**	MA Brown	**CB0TP2T1014AV**	AV Ivory	2 x 10	6,4	7,2	13	26	14	50
CB00TPT1614BL	BL Blue	**CB0TP1T1614AV**	AV Ivory	**CB0TP2T1614VE**	VE Green	2 x 16	8,2	9,6	18,4	30	14	50

RING TERMINAL
preinsulated

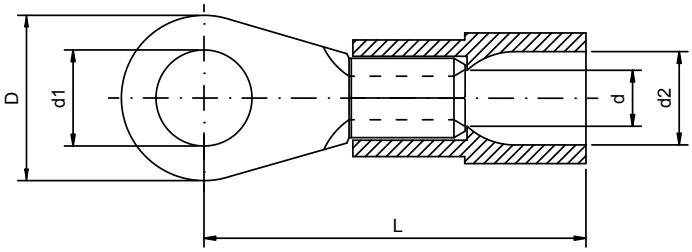

MATERIAL
CU-ETP 99,9% (Tin-plated copper)

INSULATION
PC (Polycarbonate)

COLOUR
RO Red
BL Blue
GI Yellow

NOMINAL VOLTAGE
600V max

FLAMMABILITY RATING
125°C max

CERTIFICATION
RoHS

ACCESSORIES
Crimp tool CBU00000MPIQ6

RoHS compliant Halogen Free

Code	Cable section mm²	Colour	d	d1	d2	D	L	Package (pcs)
CB00000RO0M3A	0,5 ÷ 1,5	RO	1,6	3,2	4	6	17	100
CB000RO0M305A	0,5 ÷ 1,5	RO	1,6	3,7	4	6	17	100
CB00000RO0M4A	0,5 ÷ 1,5	RO	1,6	4,3	4	8	18	100
CB0000ICIQ14S	0,5 ÷ 1,5	RO	1,6	4,3	4	7	17,5	100
CB00000RO0M5A	0,5 ÷ 1,5	RO	1,6	5,3	4	10	19	100
CB0000ICIQ15S	0,5 ÷ 1,5	RO	1,6	5,3	4	8	18,5	100
CB00000RO0M6A	0,5 ÷ 1,5	RO	1,6	6,5	4	10	19	100
CB00000RO0M8A	0,5 ÷ 1,5	RO	1,6	8,4	4	14	23	100
CB0000RO0M10A	0,5 ÷ 1,5	RO	1,6	10,5	4	18	25	100
CB00000BO0M3A	1,5 ÷ 2,5	BL	2,3	3,2	4,4	6	17	100
CB0000BO0M35A	1,5 ÷ 2,5	BL	2,3	3,7	4,4	6	17	100
CB00000BO0M4A	1,5 ÷ 2,5	BL	2,3	4,3	4,4	8	18	100
CB0000ICIQ24S	1,5 ÷ 2,5	BL	2,3	4,3	4,4	6,8	17,6	100
CB00000BO0M5A	1,5 ÷ 2,5	BL	2,3	5,3	4,4	10	20	100
CB0000ICIQ25S	1,5 ÷ 2,5	BL	2,3	5,3	4,4	8	19,5	100
CB00000BO0M6A	1,5 ÷ 2,5	BL	2,3	6,5	4,4	11	22	100
CB00000BO0M8A	1,5 ÷ 2,5	BL	2,3	8,4	4,4	14	23	100
CB0000BO0M10A	1,5 ÷ 2,5	BL	2,3	10,5	4,4	18	25,6	100
CB00000GO0M4A	4 ÷ 6	GI	3,6	4,3	6,4	8	21	100
CB00000GO0M5A	4 ÷ 6	GI	3,6	5,3	6,4	10	22	100
CB00000GO0M6A	4 ÷ 6	GI	3,6	6,5	6,4	11	23	100
CB00000GO0M8A	4 ÷ 6	GI	3,6	8,4	6,4	14	26	100
CB0000GO0M10A	4 ÷ 6	GI	3,6	10,5	6,4	18	28	100

MATERIAL
CU-ETP 99,9% (Tin-plated copper)

INSULATION
PC (Polycarbonate)

COLOUR
RO Red
BL Blue
GI Yellow

NOMINAL VOLTAGE
600V max

FLAMMABILITY RATING
125°C max

CERTIFICATION
RoHS

ACCESSORIES
Crimp tool CBU00000MPIQ6

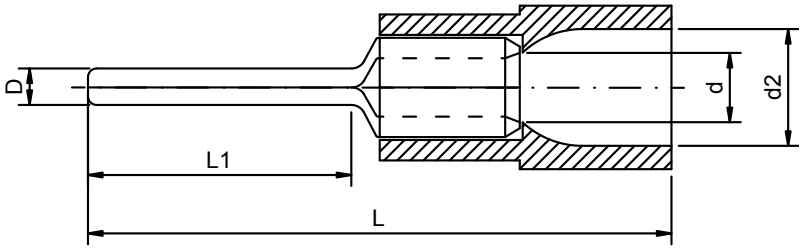

Code	Cable section mm²	Colour	d	D	d2	L	L1	Package (pcs)
CB00000RP012A	0,5 ÷ 1,5	RO	1,7	1,9	4	22,8	12	100
CB00000BP012A	1,5 ÷ 2,5	BL	2,3	1,9	4,5	22,8	12	100
CB00000BP016A	1,5 ÷ 2,5	BL	2,3	1,9	4,5	27	16	100
CB00000GP014A	4 ÷ 6	GI	3,6	2,8	6,4	27	14	100

FORK TERMINAL
preinsulated

MATERIAL
CU-ETP 99,9% (Tin-plated copper)

INSULATION
PC (Polycarbonate)

COLOUR
RO Red
BL Blue
GI Yellow

NOMINAL VOLTAGE
600V max

FLAMMABILITY RATING
125°C max

CERTIFICATION
RoHS

ACCESSORIES
Crimp tool CBU00000MPIQ6

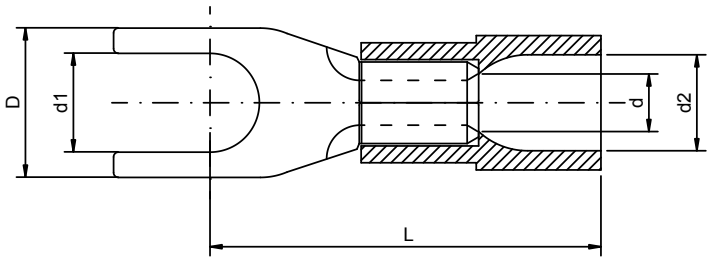

Code	Cable section mm²	Colour	d	d1	d2	D	L	Package (pcs)
CB00000RF0M3A	0,5 ÷ 1,5	RO	1,6	3,2	4	6	17	100
CB000RF0M305A	0,5 ÷ 1,5	RO	1,6	3,7	4	6	17	100
CB00000RF0M4A	0,5 ÷ 1,5	RO	1,6	4,3	4	8	18,1	100
CB000ICIQ14GS	0,5 ÷ 1,5	RO	1,6	4,3	4	6,8	18	100
CB00000RF0M5A	0,5 ÷ 1,5	RO	1,6	5,3	4	10	19	100
CB00000RF0M6A	0,5 ÷ 1,5	RO	1,6	6,5	4	11	21	100
CB00000BF0M3A	1,5 ÷ 2,5	BL	2,3	3,2	4,5	5,5	19	100
CB000BF0M305A	1,5 ÷ 2,5	BL	2,3	3,7	4,5	6	17	100
CB00000BF0M4A	1,5 ÷ 2,5	BL	2,3	4,3	4,5	8	18	100
CB000ICIQ24GS	1,5 ÷ 2,5	BL	2,3	4,3	4,5	6,8	18,7	100
CB00000BF0M5A	1,5 ÷ 2,5	BL	2,3	5,3	4,5	10	20	100
CB00000BF0M6A	1,5 ÷ 2,5	BL	2,3	6,5	4,5	11	22	100
CB00000GF0M4A	4 ÷ 6	GI	3,6	4,3	6,4	8	21	100
CB00000GF0M5A	4 ÷ 6	GI	3,6	5,3	6,4	10	22	100
CB00000GF0M6A	4 ÷ 6	GI	3,6	6,5	6,4	11	23	100
CB00000GF0M8A	4 ÷ 6	GI	3,6	8,4	6,4	14	26	100
CB000ICIQ105G	10	RO	4,5	5,3	8	10,5	24,1	50
CB000ICIQ106G	10	RO	4,5	6,5	8	10,8	24,6	50
CB000ICIQ166G	16	BL	5,8	6,5	11	11	32,2	50
CB000ICIQ168G	16	BL	5,8	8,4	11	13,8	32,2	50

MATERIAL
CU-ETP 99,9% (Tin-plated copper)

INSULATION
PC (Halogen free)

COLOUR
RO Red
BL Blue
GI Yellow

NOMINAL VOLTAGE
300V max

FLAMMABILITY RATING
120°C max

CERTIFICATION
RoHS

ACCESSORIES
Crimp tool CBU00000MPIQ6

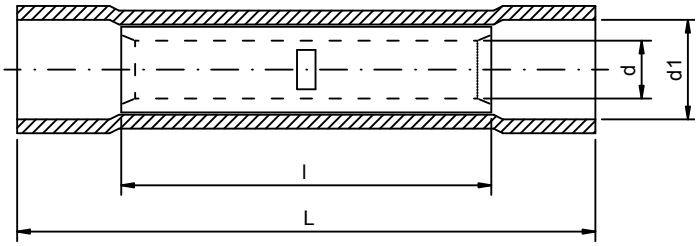

Code	Cable section mm²	Colour	d	d1	L	l	Package (pcs)
CB0000ICIQ05V	0,1 ÷ 0,5	GI	1,2	2	20	12	100
CB00000GPVC15	0,5 ÷ 1,5	RO	1,8	4,2	25	15	100
CB00000GPVC25	1,5 ÷ 2,5	BL	2,5	4,8	26	15	100
CB0000GPVC600	4 ÷ 6	GI	3,7	6,5	27	15	100

FLAG FEMALE CONNECTOR
insulated

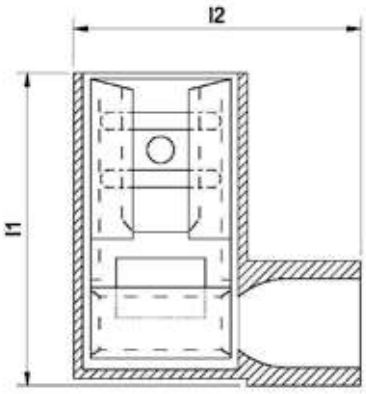

MATERIAL
Tin-plated brass

INSULATION
PA6.6 (Poliamminde)

COLOUR
RO Red
BL Blue

NOMINAL VOLTAGE
300V max

FLAMMABILITY RATING
105°C max

CERTIFICATION
RoHS

Code	Cable section mm²	Colour	Clip	l1	l2	Package (pcs)
CB000RIBF0608	0,5 ÷ 1,5	RO	6,3 x 0,8	16,3	15	100
CB000BIBF0608	1,5 ÷ 2,5	BL	6,3 x 0,8	16,8	15	100

MATERIAL
CU-ETP 99,9% (Tin-plated copper)

INSULATION
PE-HD (High density polyethylene)

COLOUR
RO Red
BL Blue
GI Yellow

NOMINAL VOLTAGE
300V max

FLAMMABILITY RATING
-10°C ÷ 105°C

CERTIFICATION
RoHS

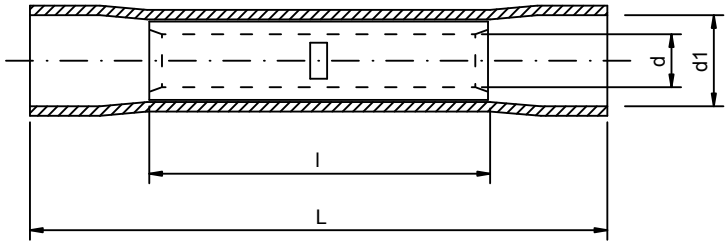

Code	Cable section mm²	Colour	d	d1	L	l	Package (pcs)
CB0000GPET15A	0,5 ÷ 1,5	RO	1,7	4,4	36	15	100
CB0000GPET25A	1,5 ÷ 2,5	BL	2,3	5,2	36	15	100
CB00000GPET6A	4 ÷ 6	GI	3,6	6,5	41	15	100

PARALLEL SPLICE
preinsulated

MATERIAL
CU-ETP 99,9% (Tin-plated copper)

INSULATION
PVC (Polyvinyl chloride)

COLOUR
RO Red
BL Blue
GI Yellow

NOMINAL VOLTAGE
300V max

FLAMMABILITY RATING
75°C max

CERTIFICATION
RoHS

ACCESSORIES
Crimp tool CBU00000MPIQ6

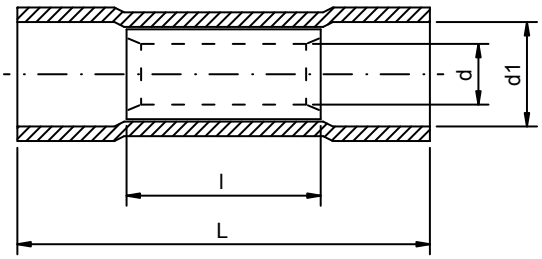

Code	Cable section mm²	Colour	d	d1	L	l	Package (pcs)
CB0000GPVC15S	0,5 ÷ 1,5	RO	1,8	4,2	18	8	100
CB0000GPVC25S	1,5 ÷ 2,5	BL	2,5	4,8	18	8	100
CB00000GPVC6S	4 ÷ 6	GI	3,7	6,5	21,5	8,5	100

MATERIAL
CU-ETP 99,9% (Tin-plated copper)

INSULATION
PA6.6 (Polyamide)

COLOUR
See table

NOMINAL VOLTAGE
300V max

FLAMMABILITY RATING
105°C max

CERTIFICATION
RoHS

ACCESSORIES
Crimp tool CBU00000MPIQ6

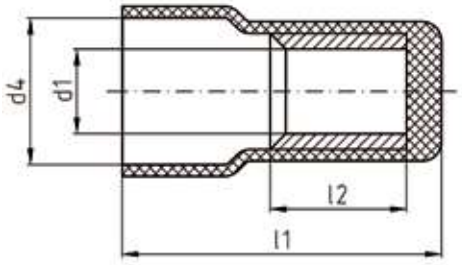

Code	Cable section mm²	Colour	d4	d1	L1	L2	Package (pcs)
CB0000ICIQ1EV	0,5 ÷ 1,5	(NA) Transparent	6	2,3	15,2	8,8	100
CB0000TCT2500	1,5 ÷ 2,5	(BL) Transparent blue	6,4	2,3	15,4	8	100
CB0000TCT6000	4 ÷ 6	(GI) Transparent Yellow	9,2	3,4	17,7	8,5	100
CB000ICIQ10EV	10	(NA) Transparent	11,8	5	22	8	100

FEMALE SPADE CONNECTOR
partially preinsulated

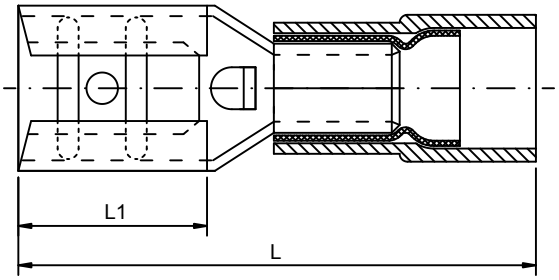

MATERIAL
Tin-plated brass with copper collar

INSULATION
PC (Polycarbonate)

COLOUR
RO Red
BL Blue
GI Yellow

NOMINAL VOLTAGE
300V max

FLAMMABILITY RATING
125°C max

CERTIFICATION
RoHS

ACCESSORIES
Crimp tool CBU00000MPIQ6

Code	Cable section mm²	Colour	Connector size	L	L1	Package (pcs)
CB0000RIF0305	0,5 ÷ 1,5	RO	2,8 x 0,5	19	6,5	100
CB0000RIF0308	0,5 ÷ 1,5	RO	2,8 x 0,8	19	6,5	100
CB0000RIF0405	0,5 ÷ 1,5	RO	4,8 x 0,5	19,4	6,4	100
CB0000RIF0408	0,5 ÷ 1,5	RO	4,8 x 0,8	19,4	6,4	100
CB0000RIF0608	0,5 ÷ 1,5	RO	6,3 x 0,8	20,8	7,5	100
CB0000BIF0405	1,5 ÷ 2,5	BL	4,8 x 0,5	19,4	6,4	100
CB0000BIF0408	1,5 ÷ 2,5	BL	4,8 x 0,8	19,4	6,4	100
CB0000BIF0608	1,5 ÷ 2,5	BL	6,3 x 0,8	20,8	7,3	100
CB0000GIF0608	4 ÷ 6	GI	6,3 x 0,8	23,3	7,3	100

MATERIAL
CU-ETP 99,9% (Tin-plated copper)

INSULATION
PA6.6 (Polyamide)

COLOUR
RO Red
BL Blue
GI Yellow

NOMINAL VOLTAGE
300V max

FLAMMABILITY RATING
105°C max

CERTIFICATION
RoHS

ACCESSORIES
Crimp tool CBU00000MPIQ6

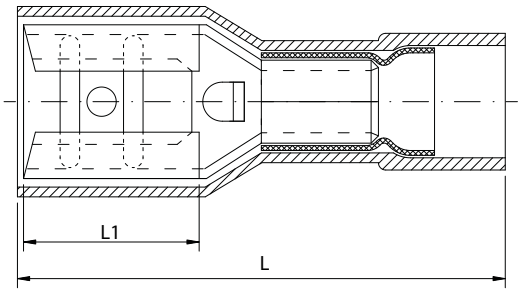

Code	Cable section mm²	Colour	Connector size	L	L1	Package (pcs)
CB00RIF0305TI	0,5 ÷ 1,5	RO	2,8 x 0,5	19,2	6,4	100
CB00RIF0308TI	0,5 ÷ 1,5	RO	2,8 x 0,8	19,2	6,4	100
CB00RIF4050TI	0,5 ÷ 1,5	RO	4,8 x 0,5	20,2	6,4	100
CB00RIF4080TI	0,5 ÷ 1,5	RO	4,8 x 0,8	20,2	6,4	100
CB000RIF608TI	0,5 ÷ 1,5	RO	6,3 x 0,8	21,5	7,3	100
CB000BIF405TI	1,5 ÷ 2,5	BL	4,8 x 0,5	20,2	6,5	100
CB000BIF408TI	1,5 ÷ 2,5	BL	4,8 x 0,8	20,2	6,5	100
CB000BIF608TI	1,5 ÷ 2,5	BL	6,3 x 0,8	24,5	7,3	100
CB00GIF0608TI	4 ÷ 6	GI	6,3 x 0,8	24,2	7,3	100

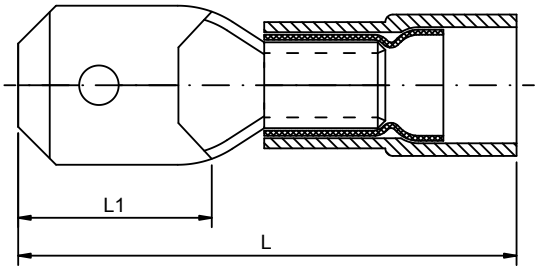

MATERIAL
Tin-plated brass with copper collar

INSULATION
PC (Polycarbonate)

COLOUR
RO Red
BL Blue
GI Yellow

NOMINAL VOLTAGE
300V max

FLAMMABILITY RATING
125°C max

CERTIFICATION
RoHS

ACCESSORIES
Crimp tool CBU00000MPIQ6

Code	Cable section mm²	Colour	Tongue section	L	L1	Package (pcs)
CB0000RIM0308	0,5 ÷ 1,5	RO	2,8 x 0,8	19,2	6,5	100
CB0000RIM0408	0,5 ÷ 1,5	RO	4,8 x 0,8	19,8	6,7	100
CB0000RIM0608	0,5 ÷ 1,5	RO	6,3 x 0,8	21,8	7,7	100
CB0000BIM0408	1,5 ÷ 2,5	BL	4,8 x 0,8	19,8	6,7	100
CB0000BIM0608	1,5 ÷ 2,5	BL	6,3 x 0,8	21,8	7,7	100
CB0000GIM0608	4 ÷ 6	GI	6,3 x 0,8	24	7,7	100

MATERIAL
CU-ETP 99,9% (Tin-plated copper)

INSULATION
PA6.6 (Polyamide)

COLOUR
RO Red
BL Blue

NOMINAL VOLTAGE
300V max

FLAMMABILITY RATING
105°C max

CERTIFICATION
RoHS

ACCESSORIES
Crimp tool CBU00000MPIQ6

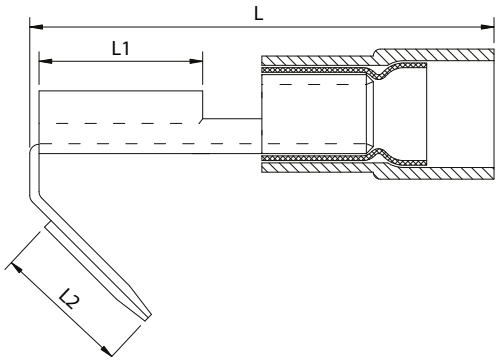

Code	Cable section mm²	Colour	Tongue section	L	L1	L2	Package (pcs)
CB000RIMF0608	0,5 ÷ 1,5	RO	6,3 x 0,8	23,9	6	8,2	100
CB000BIMF0608	1,5 ÷ 2,5	BL	6,3 x 0,8	23	8	6,2	100

FEMALE BULLET CONNECTOR
completely preinsulated

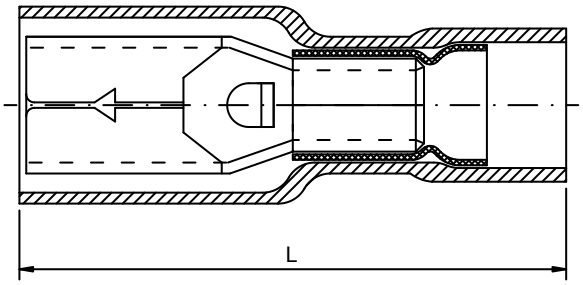

MATERIAL
Tin-plated brass with copper collar

INSULATION
PVC (Polyvinyl chloride)

COLOUR
RO Red
BL Blue
GI Yellow

NOMINAL VOLTAGE
300V max

FLAMMABILITY RATING
75°C max

CERTIFICATION
RoHS

ACCESSORIES
Crimp tool CBU00000MPIQ6

Code	Cable section mm²	Colour	Ø Pin male	L	Package (pcs)
CB00000RIC0F4	0,5 ÷ 1,5	RO	4	23,3	100
CB00000BIC0F5	1,5 ÷ 2,5	BL	5	23,3	100
CB00000GIC0F5	4 ÷ 6	GI	5	25,1	100

MATERIAL
Tin-plated brass with copper collar

INSULATION
PVC (Polyvinyl chloride)

COLOUR
RO Red
BL Blue
GI Yellow

NOMINAL VOLTAGE
300V max

FLAMMABILITY RATING
75°C max

CERTIFICATION
RoHS

ACCESSORIES
Crimp tool CBU00000MPIQ6

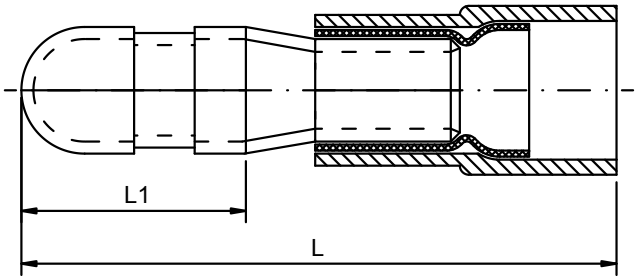

Code	Cable section mm²	Colour	Ø Pin	L	L1	Package (pcs)
CB00000RIC0M4	0,5 ÷ 1,5	RO	4	21,5	8,5	100
CB00000BIC0M5	1,5 ÷ 2,5	BL	5	21,2	8,5	100
CB00000GIC0M5	4 ÷ 6	GI	5	24	8,5	100

PIPE CABLE LUG
not insulated

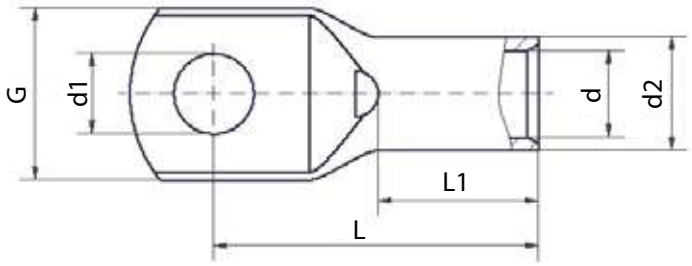

MATERIAL
CU-HCP 99.9%, Tin-plated copper

NOTES
With inspection hole (also available without).

UL/CSA-FILE
E499227

ACCESSORIES
Crimp tool CBU00000MPR01 for cable sections from 6 ÷ 50.

Code	Cable section mm²	d	d1	d2	G	L	L1	Package (pcs)
CB000CI1050M3	1 ÷ 1,5	1,9	3,2	3,9	6,5	14	6	100
CB000CI1050M4	1 ÷ 1,5	1,9	4,3	3,9	8,5	15	6	100
CB000CI1050M5	1 ÷ 1,5	1,9	5,3	3,9	10	16	6	100
CB000CI1050M6	1 ÷ 1,5	1,9	6,4	3,9	11	18	6	100
CB000CI2050M4	2,5	2,4	4,3	4,4	8,5	15	6,5	100
CB000CI2050M5	2,5	2,4	5,3	4,4	10	16	6,5	100
CB000CI2050M6	2,5	2,4	6,4	4,4	11	18	6,5	100
CB000CI2050M8	2,5	2,4	8,4	4,4	13	20	6,5	100
CB00000CI40M4	4	3	4,3	5	8,5	17	8	100
CB00000CI40M5	4	3	5,3	5	10	18	8	100
CB00000CI40M6	4	3	6,4	5	11	20	8	100
CB00000CI40M8	4	3	8,4	5	14	22	8	100
CB00000CI60M4	6	3,7	4,3	5,5	8,5	17,5	8	100
CB00000CI60M5	6	3,7	5,3	5,5	10	19	8	100
CB00000CI60M6	6	3,7	6,4	5,5	11	21	8	100
CB00000CI60M8	6	3,7	8,4	5,5	14	23	8	100
CB0000CI60M10	6	3,7	10,5	5,5	15	25,5	8	100
CB0000CI100M4	10	4,3	4,3	6,7	10	19,5	10	100
CB0000CI100M5	10	4,3	5,3	6,7	10	20,5	10	100
CB0000CI100M6	10	4,3	6,4	6,7	11	22,5	10	100
CB0000CI100M8	10	4,3	8,4	6,7	15	25	10	100
CB000CI100M10	10	4,3	10,5	6,7	18	27,5	10	100
CB000CI100M12	10	4,3	13	6,7	19	28,5	10	100
CB0000CI160M5	16	5,4	5,3	7,8	12	22,5	11	100
CB0000CI160M6	16	5,4	6,4	7,8	12	24,5	11	100
CB0000CI160M8	16	5,4	8,4	7,8	15	26,5	11	100
CB000CI160M10	16	5,4	10,5	7,8	18	29	11	100
CB000CI160M12	16	5,4	13	7,8	20	30	11	100
CB0000CI250M5	25	6,9	5,3	9,4	14	25	13	100
CB0000CI250M6	25	6,9	6,4	9,4	14	27	13	100
CB0000CI250M8	25	6,9	8,4	9,4	15	29	13	100
CB000CI250M10	25	6,9	10,5	9,4	18	31,5	13	100
CB000CI250M12	25	6,9	13	9,4	20	32,5	13	100
CB000CI250M14	25	6,9	15	9,4	22	34,5	13	100
CB0000CI350M5	35	8,3	5,3	11,3	16,5	32,5	16	100
CB0000CI350M6	35	8,3	6,4	11,3	16,5	32,5	16	100
CB0000CI350M8	35	8,3	8,4	11,3	16,5	33	16	100
CB000CI350M10	35	8,3	10,5	11,3	18	35,5	16	100
CB000CI350M12	35	8,3	13	11,3	20	36,5	16	100
CB000CI350M14	35	8,3	15	11,3	22	39	16	100
CB000CI350M16	35	8,3	17	11,3	26	41,5	16	100

MATERIAL
CU-HCP 99.9%, Tin-plated copper

NOTES
With inspection hole

UL/CSA-FILE
E499227

ACCESSORIES
Crimp tool CBU00000MPR02 for cable sections from 25 ÷ 150.

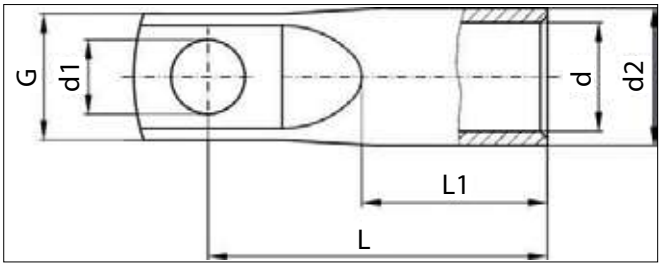

Code	Cable section mm²	d	d1	d2	G	L	L1	Package (pcs)
CB000CI35M6PR	35	8,3	6,4	11,3	15	32,5	16	25
CB000CI50M6PR	50	9,6	6,4	13,1	15	36	18	25
CB00CI50M10PR	50	9,6	10,5	13,1	18,5	39	18	25
CB000CI70M6PR	70	11,3	6,4	14,7	17	41	21	25
CB00CI70M10PR	70	11,3	10,5	14,7	19	42,5	21	25
CB000CI95M8PR	95	13,5	8,4	17,5	19	48	23	25
CB00CI95M10PR	95	13,5	10,5	17,5	19	50	23	25
CB00CI120M8PR	120	15,5	8,4	20	19	51	26	25
CB0CI120M10PR	120	15,5	10,5	20	19	53,5	26	25
CB00CI150M8PR	150	16,8	8,4	21,3	19	55	29	25
CB00CI15010PR	150	16,8	10,5	21,3	19	57	29	25
CB0CI185M12PR	185	19	13	24	31	59,5	30	25
CB0CI240M12PR	240	21,1	13	27,3	31,5	69	35	25

PIPE CABLE LUG
preinsulated

MATERIAL
CU-HCP 99.9%, Tin-plated copper

INSULATION
PA6.6 (Polyamide)

COLOUR
N5 Black RAL 9005

NOTES
With inspection hole

ACCESSORIES
Crimp tool CBU00000MPIQ6

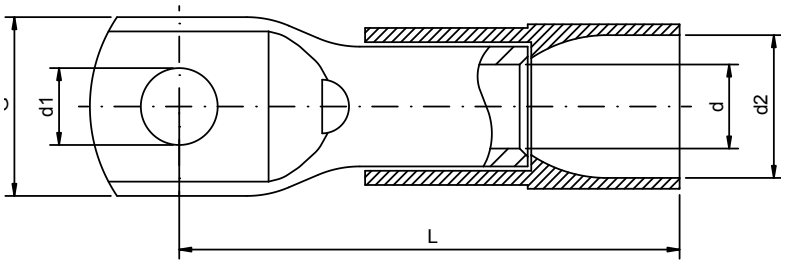

Code N5	Cable section mm²	d	d1	d2	G	L	Package (pcs)
CB000CIP100M4	10	4,3	4,3	10	10	32,5	100
CB000CIP100M5	10	4,3	5,3	10	10	33,5	100
CB000CIP100M6	10	4,3	6,4	10	11	35,5	100
CB000CIP100M8	10	4,3	8,4	10	15	38	100
CB00CIP100M10	10	4,3	10,5	10	18	40,5	100
CB00CIP100M12	10	4,3	13	10	19	41,5	100
CB000CIP160M5	16	5,4	5,3	11	12	36,5	100
CB000CIP160M6	16	5,4	6,4	11	12	38,5	100
CB000CIP160M8	16	5,4	8,4	11	15	40,5	100
CB00CIP160M10	16	5,4	10,5	11	18	43	100
CB00CIP160M12	16	5,4	13	11	20	44	100
CB000CIP250M5	25	6,9	5,3	13	14	39,5	100
CB000CIP250M6	25	6,9	6,4	13	14	41,5	100
CB000CIP250M8	25	6,9	8,4	13	15	43,5	100
CB00CIP250M10	25	6,9	10,5	13	18	46	100
CB00CIP250M12	25	6,9	13	13	20	47	100
CB00CIP250M14	25	6,9	15	13	22	49	100
CB000CIP350M5	35	8,3	5,3	16	16,5	49,5	100
CB000CIP350M6	35	8,3	6,4	16	16,5	49,5	100
CB000CIP350M8	35	8,3	8,4	16	16,5	50	100
CB00CIP350M10	35	8,3	10,5	16	18	52,5	100
CB00CIP350M12	35	8,3	13	16	20	53,5	100
CB00CIP350M14	35	8,3	15	16	22	56	100
CB00CIP350M16	35	8,3	17	16	26	58,5	100
CB000CIP500M6	50	9,6	6,4	18	19	53	100
CB000CIP500M8	50	9,6	8,4	18	19	54	100
CB00CIP500M10	50	9,6	10,5	18	20	56	100
CB00CIP500M12	50	9,6	13	18	23	57,5	100
CB00CIP500M14	50	9,6	15	18	25	59,5	100
CB00CIP500M16	50	9,6	17	18	27	62,5	100
CB00CIP500M20	50	9,6	21	18	28	67	100
CB000CIP700M6	70	11,3	6,4	21	22,5	63	100
CB000CIP700M8	70	11,3	8,4	21	22,5	63	100
CB00CIP700M10	70	11,3	10,5	21	22,5	64,5	100
CB00CIP700M12	70	11,3	13	21	23	65,5	100
CB00CIP700M14	70	11,3	15	21	26	68	100
CB00CIP700M16	70	11,3	17	21	28	70,5	100

MATERIAL
Brass tinned

CERTIFICATION
RoHS

TYPE A

TYPE B

TYPE A

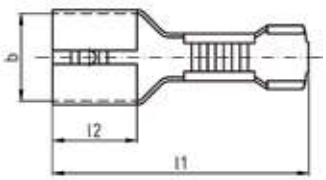

TYPE B

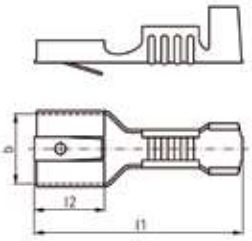

Code	Type	Cable section mm²	Connector size	l1	l2	Package (pcs)
CB000ICC125FH	A	0,5 ÷ 1	2,8 x 0,5	14,6	6,2	100
CB000ICC128FH	A	0,5 ÷ 1	2,8 x 0,8	14,6	5,2	100
CB000ICC145FH	A	0,5 ÷ 1	4,8 x 0,5	15,6	6,4	100
CB000ICC148FH	A	0,5 ÷ 1	4,8 x 0,8	15,6	6,4	100
CB000ICC168FH	A	0,5 ÷ 1	5,3 x 0,8	19,7	7,7	100
CB000ICC248FH	A	1,5 ÷ 2,5	4,8 x 0,8	15,9	6,6	100
CB000ICC268FH	A	1,5 ÷ 2,5	6,3 x 0,8	19,7	7,7	100
CB000ICC668FH	A	4 ÷ 6	6,3 x 0,8	19,8	7,7	100
CB00ICC168FHR	B	0,5 ÷ 1	6,3 x 0,8	20	7,6	100
CB00ICC268FHR	B	1,5 ÷ 2,5	6,3 x 0,8	20	7,6	100
CB00ICC668FHR	B	4 ÷ 6	6,3 x 0,8	19,38	7,7	100

MALE SPADE CONNECTOR
not preinsulated
CB000-V

MATERIAL
Brass tinned

CERTIFICATION
RoHS

TYPE A

TYPE B

TYPE A

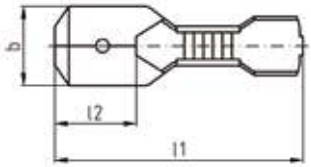

TYPE B

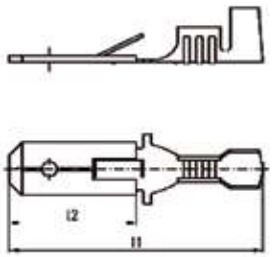

Code	Type	Cable section mm²	Tongue section	l1	l2	Package (pcs)
CB000ICC168FS	A	0,5 ÷ 1	6,3 x 0,8	20,5	9,3	100
CB000ICC268FS	A	1,5 ÷ 2,5	6,3 x 0,8	20,7	8	100
CB00ICC168FSR	B	0,5 ÷ 1	6,3 x 0,8	28	15	100
CB00ICC268FSR	B	1,5 ÷ 2,5	6,3 x 0,8	28	15	100
CB00ICC668FSR	B	4 ÷ 6	6,3 x 0,8	28,7	15,4	100

MATERIAL
PA6.6 (Polyamide)
PE (Polyethylene)

NOMINAL VOLTAGE
UL 94 V-2

FLAMMABILITY RATING
105°C max

Code PA6.6	Code PE	Type	Cable section mm²	For connector size	Package (pcs)
CB0000ICC12IH	-	1	0,5 ÷ 1	2,8	100
CB0000ICC24IH	-	2	0,5 ÷ 2,5	4,8	100
-	**CB0000ICC26IH**	3	0,5 ÷ 2,5	6,3	100
CB0000ICC66IH	-	4	0,5 ÷ 6	6,3	100

CB000-Y UNINSULATED ADAPTER FOR SPADE CONNECTOR

MATERIAL
OT58 Brass tinned

Code	Type	Cable section mm²	Tongue	Package (pcs)
CB0000ICC1FHA	1	0,5 ÷ 1,5	6,3 x 0,8	100
CB0000ICC2FHA	1	1,5 ÷ 2,5	6,3 x 0,8	100
CB0ICC68FHAII	2	-	6,3 x 0,8	100
CBICC68FHAIII	3	-	6,3 x 0,8	100

MATERIAL
OT58 Brass tinned

CERTIFICATION
RoHS

Code	Type	Tongue	Ø Hole	Package (pcs)
CB000ICC68FSI	1	6,3 x 0,8	4,2	100
CBICC68FSIIL4	2	6,3 x 0,8	4,2	100
CBICC68FSIIL5	2	6,3 x 0,8	5,2	100
CB0ICC68FSIII	3	6,3 x 0,8	4,2	100
CB0ICC68FSVL4	5	6,3 x 0,8	4,3	100
CB0ICC68FSVL6	5	6,3 x 0,8	6,2	100
CB00ICC68FSVI	6	6,3 x 0,8	4,3	100
CB0ICC28FSVII	7	2,8 x 0,8	-	100
CB0ICC68FSVII	7	6,3 x 0,8	-	100
CBICC68FSVIII	8	6,3 x 0,8	-	100

SINGLE-POLE TERMINAL BLOCK | CB000-T

MATERIAL
Body: PC (transparent polycarbonate)
Cage insert: Brass
Screw: Zinc Plated Steel

NOMINAL VOLTAGE
UL 94 V-2

FLAMMABILITY RATING
85°C

CERTIFICATION
RoHS

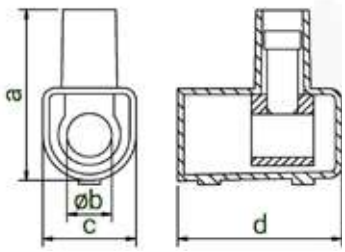

Code	Concuctor section mm²	Rated voltage V	Rated current A	Degree of protection	Poles per bar	a	b	c	d	Package (pcs)
CB00000MVU105	1,5	450	17,5	IP 20	10	16	3,3	10	15	10
CB00000MVU205	2,5	450	24	IP 20	10	17,6	3,7	8,4	17,6	10
CB00000MVU040	4	450	32	IP 20	10	21	4,5	10,5	19,3	10
CB00000MVU060	6	500	41	IP 20	10	23	5,6	11,5	22,5	10
CB00000MVU100	10	500	57	IP 20	10	28	6,9	14,6	26	5
CB00000MVU160	16	500	76	IP 00	10	33	9	19,7	31	5
CB00000MVU250	25	500	101	IP 00	1	41	12	22	39	5
CB00000MVU350	35	500	125	IP 00	1	44	14	25	46	5
CB00000MVU500	50	750	150	IP 00	1	63	7,7	28	44	1
CB00000MVU700	70	750	175	IP 00	1	71	11	33	48	1

CBU00-A CRIMP TOOL FOR PREINSULATED TERMINALS

CRIMPING PROFILE
Oval / Double crimping

NOTES
Simultaneous crimping of the conductor and insulation.

Code	Cable section mm²	Length mm	Package (pcs)
CBU00000MPIQ6	0,5 ÷ 6	220	1

CBU00-B CRIMP TOOL FOR FERRULES WITH BUSHINGS

CRIMPING PROFILE
Trapezoid

Code	Cable section mm²	Length mm	Package (pcs)
CBU000MPAE16T	0,14 ÷ 16	230	1

CBU00-E CABLE STRIPPER WITH QUICK RELEASE SYSTEM

NOTES
Cutting depth 0.1-3.0 mm; guarantees zero damage to underlying layers.
Circular, lengthwise and helicoidal cut.

Code	Cable section mm²	Length mm	Package (pcs)
CBU00000ABI01	4,5 ÷ 29	140	1

USE
Removal of external insulation from unipolar and multipolar cables.

NOTES
Adjustable blade pressure.
Adjustable wire stripping length.
Built-in cutting device.
Caution: not recommended for use on live electrical equipment.

Code	Cable section mm²	Dimensions mm	Package (pcs)
CBU00000PTS04	0,2 ÷ 6	170 x 82 x 20	1

CRIMP TOOL FOR UNINSULATED CABLE LUGS AND JOINTS | CBU00-D

CRIMPING PROFILE
Hexagonal

6 - 50 mm²

25 - 150 mm²

USE
Suitable for hexagonal crimping of uninsulated terminals and joints

NOTES
Ability to select the section through a revolver matrix.
Decreased crimping strength.

Code	Cable section mm²	Length mm	Weight Kg	Package (pcs)
CBU00000MPR01	6 ÷ 50	380	1,5	1
CBU00000MPR02	25 ÷ 150	535	3,7	1

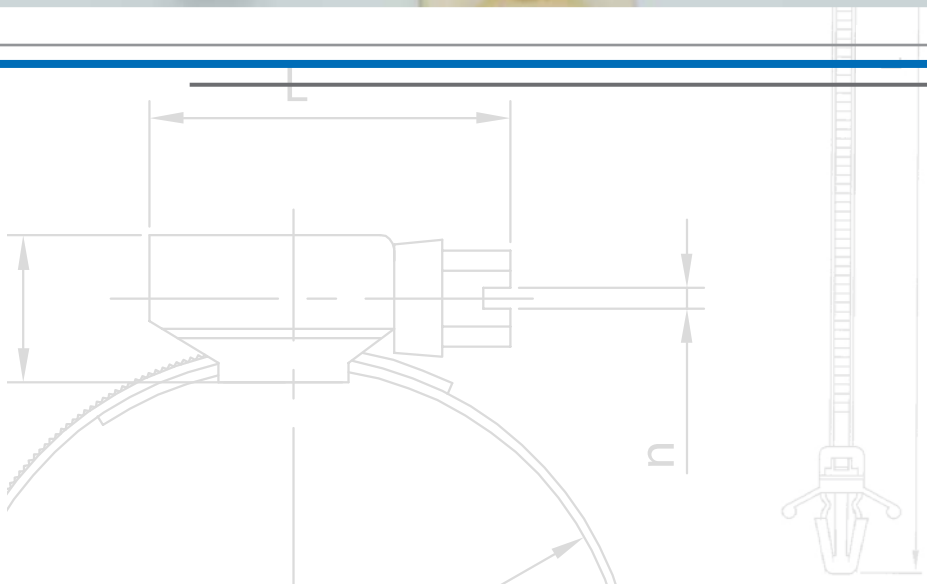

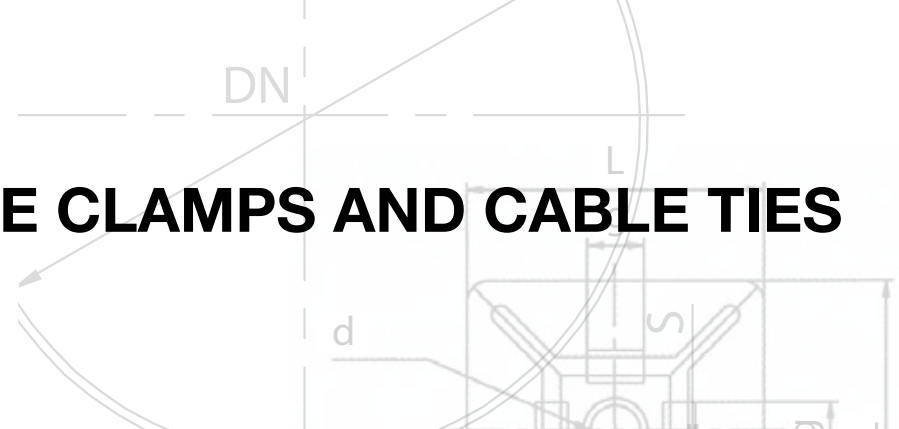

3

HOSE CLAMPS AND CABLE TIES

Plastic cable ties
page 3.1

Plastic cable tie holder
page 3.8

Metal hose clamps
page 3.12

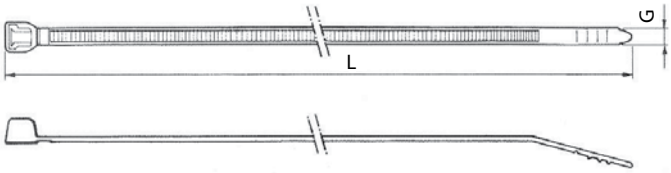

MATERIAL
PA6.6 (Polyamide)

COLOUR
(NA) Natural
(NE) Black

SELF-EXTINGUISHING
UL 94 V-2

OPERATING TEMPERATURE
-40°C ÷ 85°C

CERTIFICATION
UL
LLOYD'S
GL 59425-08HH
MIL-23190D

Code (NA)	Code (NE)	G	L	Tightening diameter (max)	Package (pcs)
EL00F08020400	EL00F08020409	2,4	80	15	1.000
EL00F10020500	EL00F10020509	2,5	100	22	1.000
EL00F12020500	EL00F12020509	2,5	120	30	1.000
EL00F14020500	EL00F14020509	2,5	140	33	1.000
EL00F16020500	EL00F16020509	2,5	160	40	1.000
EL00F20020500	EL00F20020509	2,5	200	53	1.000
EL00F12030600	EL00F12030609	3,6	120	24	1.000
EL00F14030600	EL00F14030609	3,6	140	33	1.000
EL00F20030600	EL00F20030609	3,6	200	53	1.000
EL00F29230600	EL00F29230609	3,6	292	76	1.000
EL00F37030600	EL00F37030609	3,6	370	102	1.000
EL00F12040800	EL00F12040809	4,8	120	24	1.000
EL00F16040800	EL00F16040809	4,8	160	38	1.000
EL00F18840800	EL00F18840809	4,8	188	46	1.000
EL00F20040800	EL00F20040809	4,8	200	50	1.000
EL00F25040800	EL00F25040809	4,8	250	60	1.000
EL00F28040800	EL00F28040809	4,8	280	70	1.000
EL00F30040800	EL00F30040809	4,8	300	76	1.000
EL00F36840800	EL00F36840809	4,8	368	102	100
EL00F39040800	EL00F39040809	4,8	390	105	100
EL00F43040800	EL00F43040809	4,8	430	110	100
EL00F53040800	EL00F53040809	4,8	530	140	100
EL00F15070600	EL00F15070609	7,6	150	33	100
EL00F20070600	EL00F20070609	7,6	200	50	100
EL00F25070600	EL00F25070609	7,6	250	65	100
EL00F29270600	EL00F29270609	7,6	292	76	100
EL00F36870600	EL00F36870609	7,6	368	102	100
EL00F45070600	EL00F45070609	7,6	450	132	100
EL00F61570600	EL00F61570609	7,6	615	176	100
EL00F75070600	EL00F75070609	7,6	750	218	100
EL00F43000900	EL00F43000909	9	430	110	100
EL00F53000900	EL00F53000909	9	530	140	100
EL00F63000900	EL00F63000909	9	630	187	100
EL00F71000900	EL00F71000909	9	710	190	100
EL00F78000900	EL00F78000909	9	780	228	100
EL00F83000900	EL00F83000909	9	830	239	100
EL00F92000900	EL00F92000909	9	920	263	100
EL00F23001300	EL00F23001309	13	230	50	100
EL00F48001300	EL00F48001309	13	480	120	100
EL00F58001300	EL00F58001309	13	580	152	100
EL00F73001300	EL00F73001309	13	730	204	100
EL00F88001300	EL00F88001309	13	880	248	100

MATERIAL
PA6.6 (Polyamide)

COLOUR
(NA) Natural
(NE) Black

SELF-EXTINGUISHING
UL 94 V-2

OPERATING TEMPERATURE
-40°C ÷ 85°C

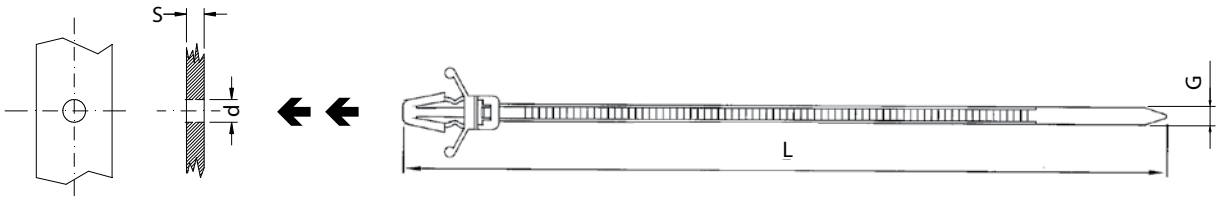

Code (NA)	Code (NE)	G	L	d	S	Tightening diameter (max)	Package (pcs)
MFF2406218000	-	4,5	100	6,2 ÷ 6,5	0,8 ÷ 2	18	10.000
-	**MFF24080450N8**	5	206	8	0,7 ÷ 3,5	45	3.000

MATERIAL
PA6.6 (Polyamide)

COLOUR
(NA) Natural
(NE) Black

SELF-EXTINGUISHING
UL 94 V-2

OPERATING TEMPERATURE
-40°C ÷ 85°C

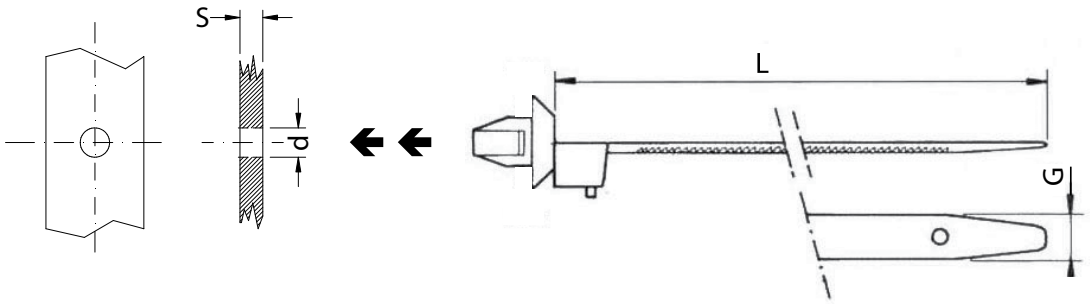

Code (NA)	Code (NE)	G	L	d	S	Tightening diameter (min÷max)	Releasable	Package (pcs)
-	**MFF28065010N8**	4,5	160	6,5	0,7 ÷ 3	1,5 ÷ 35	No	4.000
MFF2806503000	-	4,8	100	6,5	0,6 ÷ 2,5	3 ÷ 20	Yes	5.000

MATERIAL
PA6.6 (Polyamide)

COLOUR
NE Black

SELF-EXTINGUISHING
UL 94 V-2

OPERATING TEMPERATURE
-40°C ÷ 85°C

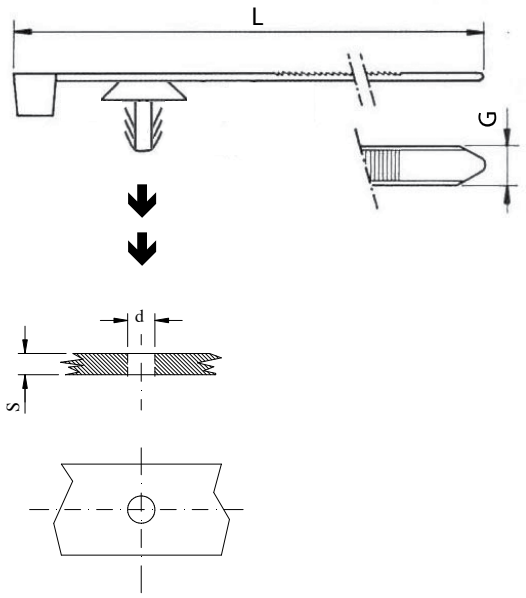

Code NE	G	L	d	S	Tightening diameter (min÷max)	Package (pcs)
MFF26065050N8	4,8	186	6,5	0,7 ÷ 3,5	5 ÷ 45	4.000

MATERIAL
PA6.6 (Polyamide)

COLOUR
NE Black

SELF-EXTINGUISHING
UL 94 V-2

OPERATING TEMPERATURE
-40°C ÷ 85°C

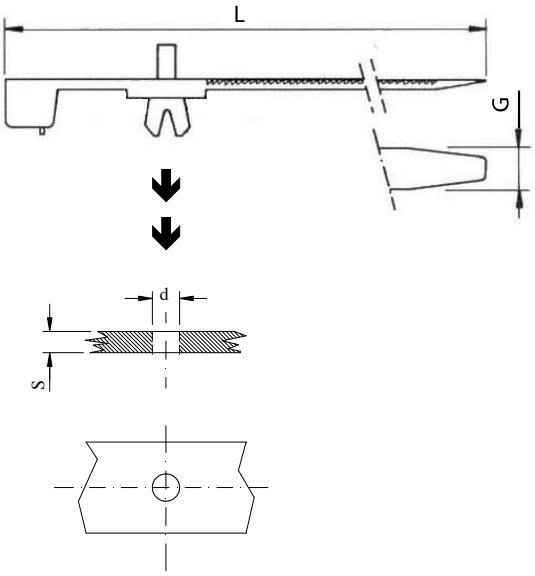

Code NE	G	L	d	S	Tightening diameter (min÷max)	Package (pcs)
MFF27080080N8	7	160	8	0,5 ÷ 3	8 ÷ 40	1.000

MATERIAL - SURFACE TREATMENT
Body: PA6.6 (Polyamide)
Clamp: AC (Steel) galvanized white

COLOUR
NE Black

SELF-EXTINGUISHING
UL 94 V-2

OPERATING TEMPERATURE
-40°C ÷ 85°C

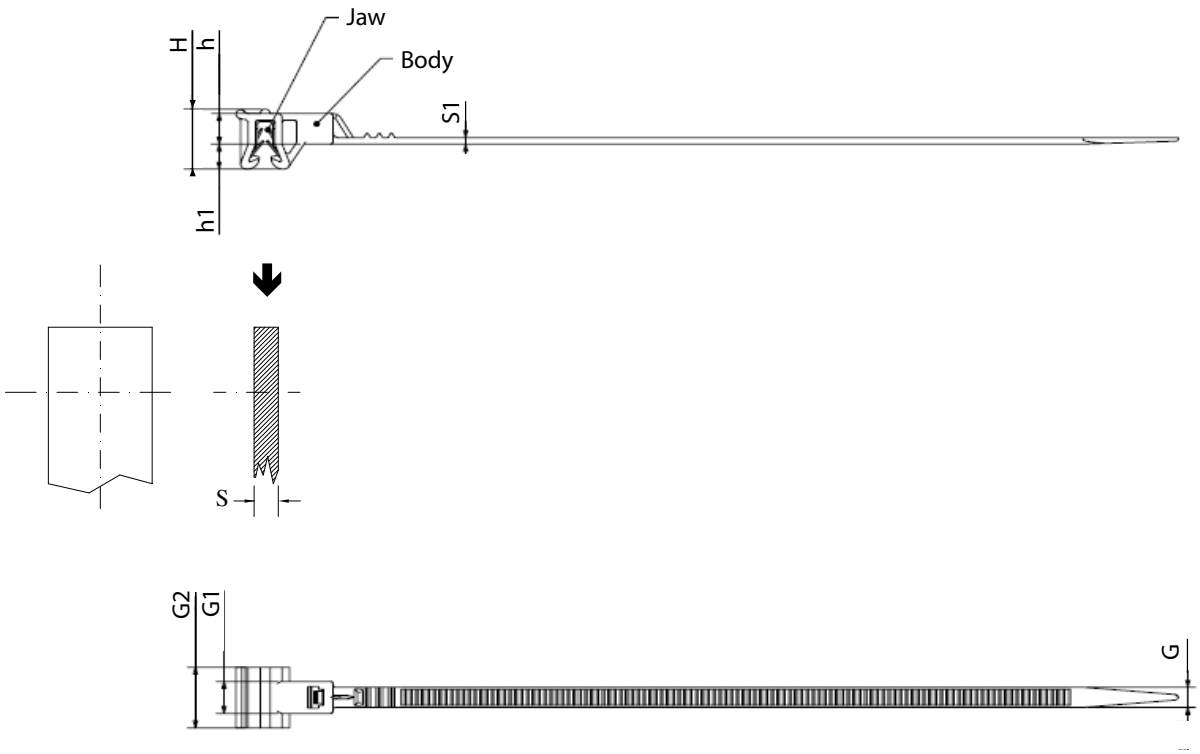

Code NE	G	L	S1	H	h	h1	G1	G2	S	Tightening diameter (min÷max)	Package (pcs)
MFF25007050N8	4,8	195	1,5	13	7	5,7	7,5	14	0,7 ÷ 2,5	5 ÷ 40	1.200

MATERIAL
PA6.6 (Polyamide)

COLOUR
(NA) Natural
(NE) Black

SELF-EXTINGUISHING
UL 94 V-2

OPERATING TEMPERATURE
-40°C ÷ 85°C

CERTIFICATION
UL
LLOYD'S
MIL-23190D

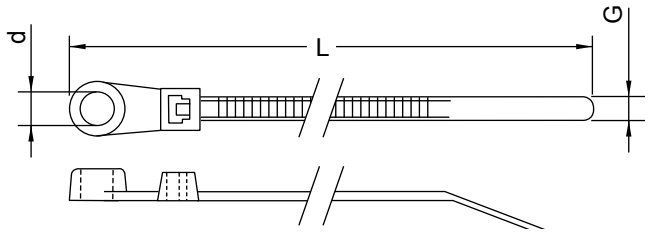

Code (NA)	Code (NE)	G	L	d	Capacity (Kg)	Tightening diameter (max)	Package (pcs)
WKF0303222000	**WKF03032220N8**	2,5	110	3,2	8,1	22	100
WKF0304232000	**WKF03042320N8**	3,6	150	4,2	18,2	32	100
WKF0305550000	**WKF03055500N8**	4,8	200	5,5	22,2	50	100
WKF0305750000	**WKF03057500N8**	7,6	200	5,7	54,4	50	100
WKF0305776000	**WKF03057760N8**	7,6	313	5,7	54,4	76	100
WKF0306398000	**WKF03063980N8**	7,6	382	6,3	54,4	98	100

MATERIAL
PA6.6 (Polyamide)

COLOUR
(NA) Natural
(NE) Black

ADHESIVE
Rubber base
Adhesive 3M*

SELF-EXTINGUISHING
UL 94 V-2

OPERATING TEMPERATURE
-40°C ÷ 85°C

• c UL us

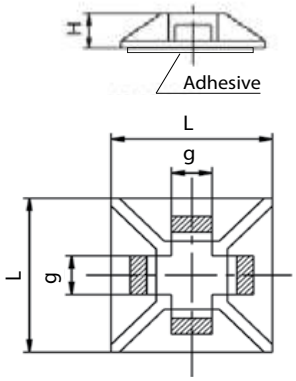

Code (NA)	Code (NE)	g	L	H	Package (pcs))
WKF0503212000	**WKF05032120N8**	3,2	12,7	3,2	100
KGF3642038000*	**-**	3,8	16	4	1.000
KGF3642040000* •	**-**	4	19,1	4	500
KGF3642050000*	**-**	5	19,5	4,8	500
KGF3642048000* •	**-**	4,8	20	4,3	500

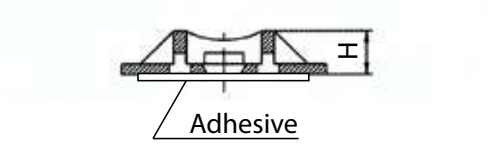

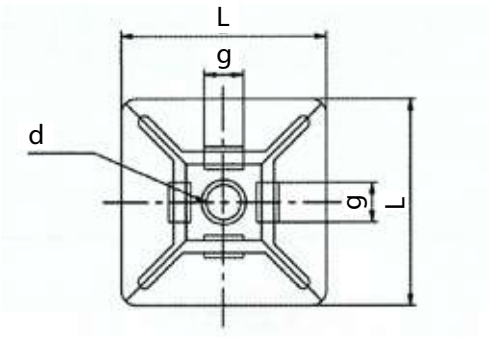

MATERIAL
PA6.6 (Polyamide)

COLOUR
(NA) Natural
(NE) Black

ADHESIVE
Rubber base

SELF-EXTINGUISHING
UL 94 V-2

OPERATING TEMPERATURE
-40°C ÷ 85°C

Code (NA)	Code (NE)	g	L	H	d	Package (pcs)
WKF0504019000	**WKF05040190N8**	4	19	4,4	3,5	100
WKF0505327000	**WKF05053270N8**	5,3	27,7	5,7	5,7	100

MATERIAL
PA6.6 (Polyamide)

COLOUR
(NA) Natural
(NE) Black

SELF-EXTINGUISHING
UL 94 V-2

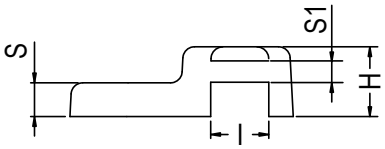

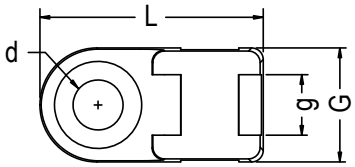

Code (NA)	Code (NE)	g	G	L	S1	l	H	S	d	Package (pcs)
KGFA443052000	**KGFA4430520N8**	5,2	9,8	19,2	1,9	5	6	2,9	4,3	1.000

MATERIAL
PA6.6 (Polyamide)

COLOUR
(NA) Natural
(NE) Black

SELF-EXTINGUISHING
UL 94 V-2

OPERATING TEMPERATURE
-40°C ÷ 85°C

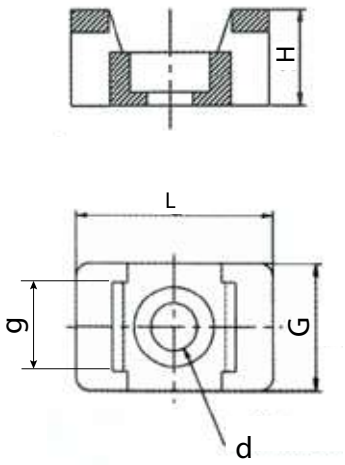

Code (NA)	Code (NE)	g	G	L	H	d	Package (pcs)
WKF0604837000	**WKF06048370N8**	4,8	9,5	14,9	7,2	3,7	100
WKF0604845000	**WKF06048450N8**	4,8	9,5	14,9	7,2	4,5	100
WKF0607645000	**WKF06076450N8**	7,6	15,9	21,9	9,7	4,5	100
WKF0607650000	**WKF06076500N8**	7,6	15,9	21,9	9,7	5	100
WKF0607664000	**WKF06076640N8**	7,6	15,9	21,9	9,7	6,4	100
KGF8337056000	-	5,6	9,6	14,9	7,2	3,7	1.000
KGF8345056000	-	5,6	9,6	14,9	7,2	4,5	1.000
KGF8345092000	-	9,2	16	22	9,6	4,5	1.000
KGF8348092000	**KGF83480920N8**	9,2	16	22	9,6	4,8	1.000
KGF8364092000	**KGF83640920N8**	9,2	16	22	9,6	6,4	1.000

STANDARD
DIN 3017

MATERIAL
W1 (Band-Housing-Screw: White galvanized steel)
W2 (Band-Housing: AISI430 - Screw: White galvanized steel)
W4 (Band-Housing-Screw: AISI304)
W5 ((Band-Housing-Screw: AISI316)

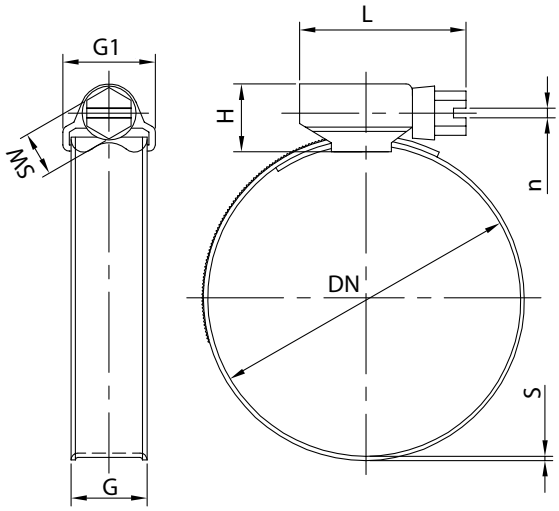

Code W1	Code W2	Code W4	Code W5	DN (min-max)	G (-0,2+0,5)	S (±0,7)	G1 (max)	L (±1)	H (max)	SW (+0-0,22)	n (±0,2)	Tightening torque (Nm)	Package (pcs)
CLPCN012W1000	**CLPCN01200000**	**CLPCNX0120000**	**CLPCNH0120000**	8 ÷ 12	9	0,7	13	-	12	7	1,5	4,5	100
CLPCN016W1000	**CLPCN01600000**	**CLPCNX0160000**	**CLPCNH0160000**	10 ÷ 16	9	0,7	13	-	12	7	1,5	4,5	100
CLPCN020W1000	**CLPCN02000000**	**CLPCNX0200000**	**CLPCNH0200000**	12 ÷ 20	9	0,7	13	-	12	7	1,5	4,5	100
CLPCN022W1000	**CLPCN02200000**	**CLPCNX0220000**	**CLPCNH0220000**	12 ÷ 22	9	0,7	13	-	12	7	1,5	4,5	100
CLPCN025W1000	**CLPCN02500000**	**CLPCNX0250000**	**CLPCNH0250000**	16 ÷ 25	9	0,7	13	-	12	7	1,5	4,5	100
CLPCN027W1000	**CLPCN02700000**	**CLPCNX0270000**	**CLPCNH0270000**	16 ÷ 27	9	0,7	13	-	12	7	1,5	4,5	100
CLPCN032W1000	**CLPCN03200000**	**CLPCNX0320000**	**CLPCNH0320000**	20 ÷ 32	9	0,7	13	-	12	7	1,5	4,5	100
CLPCN035W1000	**CLPCN03500000**	**CLPCNX0350000**	**CLPCNH0350000**	23 ÷ 35	9	0,7	13	-	12	7	1,5	4,5	100
CLPCN040W1000	**CLPCN04000000**	**CLPCNX0400000**	**CLPCNH0400000**	25 ÷ 40	9	0,7	13	-	12	7	1,5	4,5	100
CLPCN045W1000	**CLPCN04500000**	**CLPCNX0450000**	**CLPCNH0450000**	30 ÷ 45	9	0,7	13	-	12	7	1,5	4,5	100
CLPCN050W1000	**CLPCN05000000**	**CLPCNX0500000**	**CLPCNH0500000**	32 ÷ 50	9	0,7	13	-	12	7	1,5	4,5	100
CLPCN060W1000	**CLPCN06000000**	**CLPCNX0600000**	**CLPCNH0600000**	40 ÷ 60	9	0,7	13	-	12	7	1,5	4,5	50
CLPCN070W1000	**CLPCN07000000**	**CLPCNX0700000**	**CLPCNH0700000**	50 ÷ 70	9	0,7	13	-	12	7	1,5	4,5	50
CLPCN080W1000	**CLPCN08000000**	**CLPCNX0800000**	**CLPCNH0800000**	60 ÷ 80	9	0,7	13	-	12	7	1,5	4,5	50
CLPCN090W1000	**CLPCN09000000**	**CLPCNX0900000**	**CLPCNH0900000**	70 ÷ 90	9	0,7	13	-	12	7	1,5	4,5	25
CLPCN100W1000	**CLPCN10000000**	**CLPCNX1000000**	**CLPCNH1000000**	80 ÷ 100	9	0,7	13	-	12	7	1,5	4,5	25
CLPCN110W1000	**CLPCN11000000**	**CLPCNX1100000**	**CLPCNH1100000**	90 ÷ 110	9	0,7	13	-	12	7	1,5	4,5	25
CLPCN120W1000	**CLPCN12000000**	**CLPCNX1200000**	**CLPCNH1200000**	100 ÷ 120	9	0,7	13	-	12	7	1,5	4,5	25
CLPCN130W1000	**CLPCN13000000**	**CLPCNX1300000**	**CLPCNH1300000**	110 ÷ 130	9	0,7	13	-	12	7	1,5	4,5	25
CLPCN140W1000	**CLPCN14000000**	**CLPCNX1400000**	**CLPCNH1400000**	120 ÷ 140	9	0,7	13	-	12	7	1,5	4,5	25
CLPCN150W1000	**CLPCN15000000**	**CLPCNX1500000**	**CLPCNH1500000**	130 ÷ 150	9	0,7	13	-	12	7	1,5	4,5	25
CLPCN160W1000	**CLPCN16000000**	**CLPCNX1600000**	**CLPCNH1600000**	140 ÷ 160	9	0,7	13	-	12	7	1,5	4,5	25

STANDARD
DIN 3017

MATERIAL
W1 (Band-Housing-Screw: White galvanized steel)
W2 (Band-Housing: AISI430 - Screw: White galvanized steel)
W4 (Band-Housing-Screw: AISI304)
W5 ((Band-Housing-Screw: AISI316)

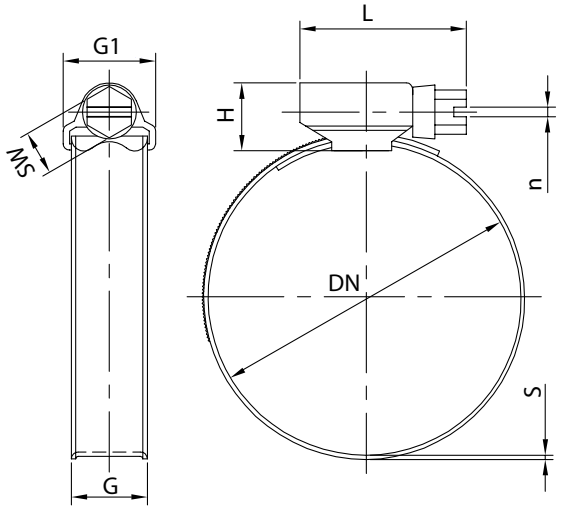

Code W1	Code W2	Code W4	Code W5	DN (min-max)	G (-0,2+0,5)	S (±0,7)	G1 (max)	L (±1)	H (max)	SW (+0-0,22)	n (±0,2)	Tightening torque (Nm)	Package (pcs)
CLPCNS0250000	**CLPCNSP025000**	**CLPCNSX025000**	**CLPCNSH025000**	16 ÷ 25	12	0,7	16	-	12	7	1,5	6	100
CLPCNS0270000	**CLPCNSP027000**	**CLPCNSX027000**	**CLPCNSH027000**	16 ÷ 27	12	0,7	16	-	12	7	1,5	6	100
CLPCNS0320000	**CLPCNSP032000**	**CLPCNSX032000**	**CLPCNSH032000**	20 ÷ 32	12	0,7	16	-	12	7	1,5	6	100
CLPCNS0350000	**CLPCNSP035000**	**CLPCNSX035000**	**CLPCNSH035000**	23 ÷ 35	12	0,7	16	-	12	7	1,5	6	100
CLPCNS0400000	**CLPCNSP040000**	**CLPCNSX040000**	**CLPCNSH040000**	25 ÷ 40	12	0,7	16	-	12	7	1,5	6	100
CLPCNS0450000	**CLPCNSP045000**	**CLPCNSX045000**	**CLPCNSH045000**	30 ÷ 45	12	0,7	16	-	12	7	1,5	6	50
CLPCNS0500000	**CLPCNSP050000**	**CLPCNSX050000**	**CLPCNSH050000**	32 ÷ 50	12	0,7	16	-	12	7	1,5	6	50
CLPCNS0600000	**CLPCNSP060000**	**CLPCNSX060000**	**CLPCNSH060000**	40 ÷ 60	12	0,7	16	-	12	7	1,5	6	50
CLPCNS0650000	**CLPCNSP065000**	**CLPCNSX065000**	**CLPCNSH065000**	45 ÷ 65	12	0,7	16	-	12	7	1,5	6	50
CLPCNS0700000	**CLPCNSP070000**	**CLPCNSX070000**	**CLPCNSH070000**	50 ÷ 70	12	0,7	16	-	12	7	1,5	6	50
CLPCNS0800000	**CLPCNSP080000**	**CLPCNSX080000**	**CLPCNSH080000**	60 ÷ 80	12	0,7	16	-	12	7	1,5	6	50
CLPCNS0900000	**CLPCNSP090000**	**CLPCNSX090000**	**CLPCNSH090000**	70 ÷ 90	12	0,7	16	-	12	7	1,5	6	25
CLPCNS1000000	**CLPCNSP100000**	**CLPCNSX100000**	**CLPCNSH100000**	80 ÷ 100	12	0,7	16	-	12	7	1,5	6	25
CLPCNS1100000	**CLPCNSP110000**	**CLPCNSX110000**	**CLPCNSH110000**	90 ÷ 110	12	0,7	16	-	12	7	1,5	6	25
CLPCNS1200000	**CLPCNSP120000**	**CLPCNSX120000**	**CLPCNSH120000**	100 ÷ 120	12	0,7	16	-	12	7	1,5	6	25
CLPCNS1300000	**CLPCNSP130000**	**CLPCNSX130000**	**CLPCNSH130000**	110 ÷ 130	12	0,7	16	-	12	7	1,5	6	25
CLPCNS1400000	**CLPCNSP140000**	**CLPCNSX140000**	**CLPCNSH140000**	120 ÷ 140	12	0,7	16	-	12	7	1,5	6	25
CLPCNS1500000	**CLPCNSP150000**	**CLPCNSX150000**	**CLPCNSH150000**	130 ÷ 150	12	0,7	16	-	12	7	1,5	6	25
CLPCNS1600000	**CLPCNSP160000**	**CLPCNSX160000**	**CLPCNSH160000**	140 ÷ 160	12	0,7	16	-	12	7	1,5	6	25
CLPCNS1700000	**CLPCNSP170000**	**CLPCNSX170000**	**CLPCNSH170000**	150 ÷ 170	12	0,7	16	-	12	7	1,5	6	25
CLPCNS1800000	**CLPCNSP180000**	**CLPCNSX180000**	**CLPCNSH180000**	160 ÷ 180	12	0,7	16	-	12	7	1,5	6	25
CLPCNS1900000	**CLPCNSP190000**	**CLPCNSX190000**	**CLPCNSH190000**	170 ÷ 190	12	0,7	16	-	12	7	1,5	6	25
CLPCNS2000000	**CLPCNSP200000**	**CLPCNSX200000**	**CLPCNSH200000**	180 ÷ 200	12	0,7	16	-	12	7	1,5	6	25

MATERIAL
W2 (Band-Housing: AISI430 - Screw: White galvanized steel)

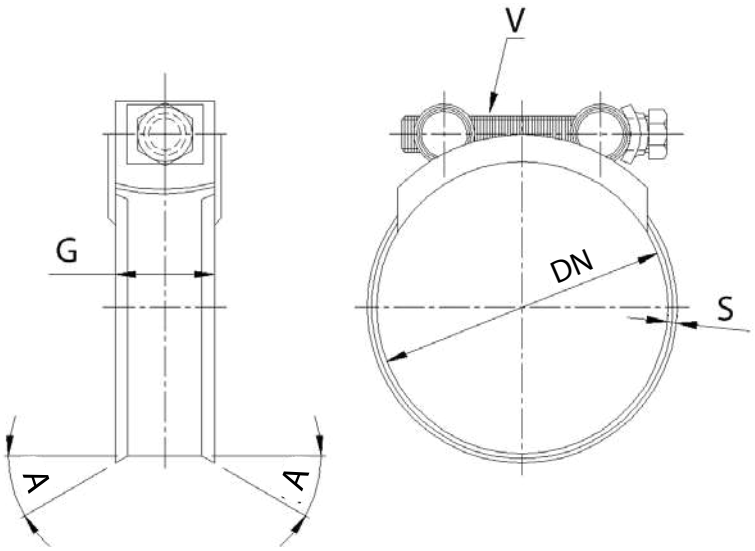

Code W2	DN (min-max)	G	S	V	A	Package (pcs)
CLPPCN0360390	36 ÷ 39	22	1,2	M8	30°	100
CLPPCN0400430	40 ÷ 43	22	1,2	M8	30°	100
CLPPCN0440470	44 ÷ 47	22	1,2	M8	30°	100
CLPPCN0480510	48 ÷ 51	22	1,2	M8	30°	100
CLPPCN0520550	52 ÷ 55	22	1,2	M8	30°	100
CLPPCN0560590	56 ÷ 59	22	1,2	M8	30°	100
CLPPCN0600630	60 ÷ 63	22	1,2	M8	30°	100
CLPPCN0640670	64 ÷ 67	22	1,2	M8	30°	100
CLPPCN0680730	68 ÷ 73	22	1,2	M8	30°	50
CLPPCN0740790	74 ÷ 79	22	1,2	M8	30°	50
CLPPCN0800850	80 ÷ 85	22	1,2	M8	30°	50
CLPPCN0850950	85 ÷ 95	22	1,2	M8	30°	50
CLPPCN0860910	86 ÷ 91	22	1,2	M8	30°	50
CLPPCN0920970	92 ÷ 97	22	1,2	M8	30°	50
CLPPCN0981030	98 ÷ 103	22	1,2	M8	30°	50
CLPPCN1041120	104 ÷ 112	22	1,2	M8	30°	50
CLPPCN1051150	105 ÷ 115	22	1,2	M8	30°	50
CLPPCN1131210	113 ÷ 121	22	1,2	M8	30°	50
CLPPCN1221300	122 ÷ 130	24	1,5	M10	30°	50
CLPPCN1311400	131 ÷ 140	24	1,5	M10	30°	25
CLPPCN1401480	140 ÷ 148	24	1,5	M10	30°	25
CLPPCN1491610	149 ÷ 161	24	1,5	M10	30°	25
CLPPCN1621740	162 ÷ 174	24	1,5	M10	30°	25
CLPPCN1751870	175 ÷ 187	24	1,5	M10	30°	20
CLPPCN1882000	188 ÷ 200	24	1,5	M10	30°	20
CLPPCN2012130	201 ÷ 213	24	1,5	M10	30°	15
CLPPCN2142270	214 ÷ 227	24	1,5	M10	30°	15
CLPPCN2272390	227 ÷ 239	24	1,5	M10	30°	10
CLPPCN2402520	240 ÷ 252	24	1,5	M10	30°	10

MATERIAL
W1 (Band-Housing-Screw: White galvanized steel)
W4 (Band-Housing-Screw: AISI304)

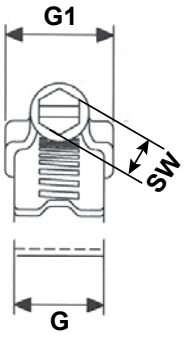

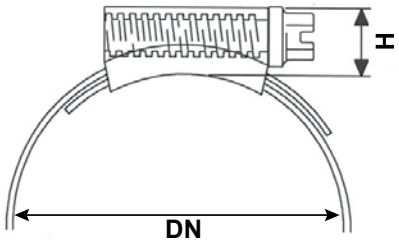

Code W1	Code W4	DN (min-max)	G	G1 (max)	H (max)	SW	Package (pcs)
CLPJC01200000	CLPJCX0120000	9,5 ÷ 12	9	16	14	7	10
CLPJC01600000	CLPJCX0160000	11 ÷ 16	9	16	14	7	10
CLPJC02000000	CLPJCX0200000	13 ÷ 20	9	16	14	7	10
CLPJC02200000	CLPJCX0220000	16 ÷ 22	13	16	14	7	10
CLPJC02500000	CLPJCX0250000	18 ÷ 25	13	16	14	7	10
CLPJC03000000	CLPJCX0300000	22 ÷ 30	13	16	14	7	10
CLPJC03500000	CLPJCX0350000	25 ÷ 35	13	16	14	7	10
CLPJC04000000	CLPJCX0400000	30 ÷ 40	13	16	14	7	10
CLPJC04500000	CLPJCX0450000	32 ÷ 45	13	16	14	7	10
CLPJC05000000	CLPJCX0500000	35 ÷ 50	13	16	14	7	10
CLPJC05500000	CLPJCX0550000	40 ÷ 55	13	16	14	7	10
CLPJC06000000	CLPJCX0600000	45 ÷ 60	13	16	14	7	10
CLPJC07000000	CLPJCX0700000	55 ÷ 70	13	16	14	7	10
CLPJC08000000	CLPJCX0800000	60 ÷ 80	13	16	14	7	10
CLPJC09000000	CLPJCX0900000	70 ÷ 90	13	16	14	7	10
CLPJC10000000	CLPJCX1000000	85 ÷ 100	13	16	14	7	10
CLPJC12000000	CLPJCX1200000	90 ÷ 120	13	16	14	7	10
CLPJC14000000	CLPJCX1400000	110 ÷ 140	13	16	14	7	10
CLPJC15000000	CLPJCX1500000	120 ÷ 150	13	16	14	7	10
CLPJC16500000	-	135 ÷ 165	13	16	14	7	10
CLPJC19000000	-	158 ÷ 190	13	16	14	7	10
CLPJC21600000	-	184 ÷ 216	13	16	14	7	10
CLPJC24200000	-	210 ÷ 242	13	16	14	7	10
CLPJC26700000	-	235 ÷ 267	13	16	14	7	10
CLPJC29200000	-	260 ÷ 292	13	16	14	7	10
CLPJC31800000	-	286 ÷ 318	13	16	14	7	10

MATERIAL
W4 (Band-Housing-Screw: AISI304)

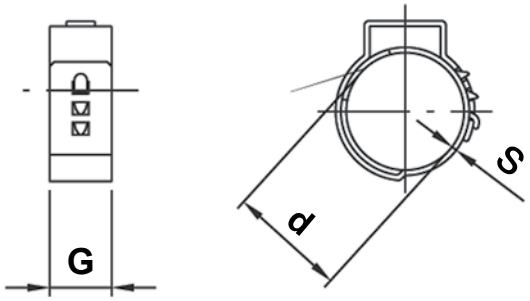

Code W4	DN (min-max)	d	G	S	Package (pcs)
CLPCAW0700000	5,7 ÷ 7	7	5	0,5	100
CLPCAW0800000	6,8 ÷ 8	8	5	0,5	100
CLPCAW0870000	7 ÷ 8,7	8,7	5	0,5	100
CLPCAW0900000	7,3 ÷ 9	9	5	0,5	100
CLPCAW0950000	7,8 ÷ 9,5	9,5	5	0,5	100
CLPCAW1000000	8,3 ÷ 10	10	5	0,5	100
CLPCAW1050000	8,8 ÷ 10,5	10,5	5	0,5	100
CLPCAW1090000	9,2 ÷ 10,9	10,9	5	0,5	100
CLPCAW1130000	9,6 ÷ 11,3	11,3	5	0,5	100
CLPCAW1180000	10,1 ÷ 11,8	11,8	5	0,5	100
CLPCAW1190000	9,4 ÷ 11,9	11,9	7	0,6	100
CLPCAW1230000	9,8 ÷ 12,3	12,3	7	0,6	100
CLPCAW1280000	10,3 ÷ 12,8	12,8	7	0,6	100
CLPCAW1330000	10,8 ÷ 13,3	13,3	7	0,6	100
CLPCAW1380000	11,3 ÷ 13,8	13,8	7	0,6	100
CLPCAW1400000	11,5 ÷ 14	14	7	0,6	100
CLPCAW1420000	11,7 ÷ 14,2	14,2	7	0,6	100
CLPCAW1450000	12 ÷ 14,5	14,5	7	0,6	100
CLPCAW1480000	12,3 ÷ 14,8	14,8	7	0,6	100
CLPCAW1530000	12,8 ÷ 15,3	15,3	7	0,6	100
CLPCAW1570000	13,2 ÷ 15,7	15,7	7	0,6	100
CLPCAW1600000	13,5 ÷ 16	16	7	0,6	100
CLPCAW1620000	13,7 ÷ 16,2	16,2	7	0,6	100
CLPCAW1660000	14,1 ÷ 16,6	16,6	7	0,6	100
CLPCAW1680000	14,3 ÷ 16,8	16,8	7	0,6	100
CLPCAW1700000	14,5 ÷ 17	17	7	0,6	100
CLPCAW1750000	15 ÷ 17,5	17,5	7	0,6	100
CLPCAW1780000	14,6 ÷ 17,8	17,8	7	0,6	100
CLPCAW1800000	14,8 ÷ 18	18	7	0,6	100
CLPCAW1850000	15,3 ÷ 18,5	18,5	7	0,6	100

MATERIAL
W4 (Band-Housing-Screw: AISI304)

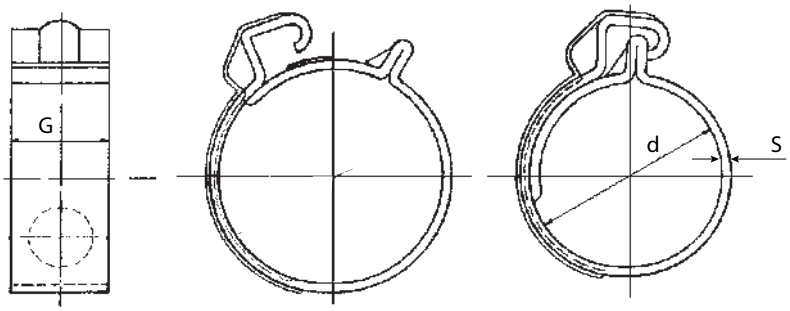

Code W4	DN (min-max)	d	G	S	Package (pcs)
CLPDCL0800000	8,5 ÷ 9,5	8	6	0,5	3.000
CLPDCL0850000	9 ÷ 10	8,5	6	0,5	3.000
CLPDCL0900000	9,5 ÷ 11	9	6	0,5	2.500
CLPDCL0950000	10 ÷ 11,5	9,5	6	0,5	2.500
CLPDCL1000000	10,5 ÷ 11,5	10	6	0,5	2.500
CLPDCL1050000	11 ÷ 12	10,5	6	0,6	2.500
CLPDCL1100000	11,5 ÷ 12,5	11	6	0,6	2.500
CLPDCL1150000	12 ÷ 13	11,5	6	0,6	2.500
CLPDCL1200000	12,5 ÷ 13,5	12	6	0,6	2.500
CLPDCL1250000	13 ÷ 14	12,5	6	0,6	2.500
CLPDCL1300000	13,5 ÷ 14,5	13	6	0,6	2.500
CLPDCL1350000	14 ÷ 15	13,5	6	0,6	2.500
CLPDCL1400000	14,5 ÷ 15,5	14	8	0,6	3.500
CLPDCL1450000	15 ÷ 16	14,5	8	0,6	3.500
CLPDCL1500000	15,5 ÷ 16,5	15	8	0,6	3.500
CLPDCL1550000	16 ÷ 17	15,5	8	0,6	3.500
CLPDCL1600000	16,5 ÷ 17,5	16	8	0,6	3.500
CLPDCL1650000	17 ÷ 18	16,5	8	0,6	3.000
CLPDCL1700000	17,5 ÷ 18,5	17	8	0,6	3.000
CLPDCL1750000	18 ÷ 19	17,5	8	0,6	3.000
CLPDCL1800000	18,5 ÷ 19,5	18	8	0,6	3.000
CLPDCL1850000	19 ÷ 20	18,5	8	0,6	3.000
CLPDCL1900000	19,5 ÷ 21	19	8	0,6	2.500
CLPDCL1950000	20 ÷ 21,5	19,5	8	0,6	2.500
CLPDCL2000000	20,5 ÷ 22	20	8	0,6	2.500
CLPDCL2050000	21 ÷ 22,5	20,5	8	0,6	2.500
CLPDCL2100000	21,5 ÷ 23	21	8	0,6	2.000
CLPDCL2150000	22 ÷ 23,5	21,5	8	0,6	2.000
CLPDCL2200000	22,5 ÷ 24	22	8	0,6	2.000
CLPDCL2250000	23 ÷ 24,5	22,5	8	0,6	2.000
CLPDCL2300000	23,5 ÷ 25	23	8	0,6	2.000
CLPDCL2350000	24 ÷ 25,5	23,5	8	0,6	2.000

MATERIAL
W1 (Band-Housing-Screw: White galvanized steel)

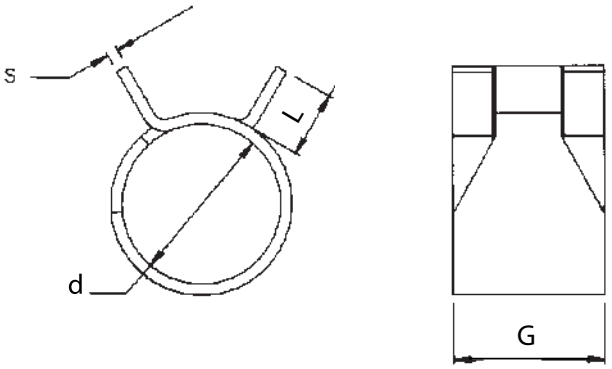

Code W1	DN	d	G	S	L	Tightening diameter (min÷max)	Package (pcs)
CLPCTS0060000	6	5,5	7	0,5	3	5,9 ÷ 6,1	500
CLPCTS0070000	7	6,4	7	0,5	3	6,9 ÷ 7,1	500
CLPCTS0080000	8	7,4	8	0,6	3	7,9 ÷ 8,2	500
CLPCTS0090000	9	8,4	8	0,6	3,5	8,9 ÷ 9,3	500
CLPCTS0100000	10	9,3	8	0,7	3,5	9,9 ÷ 10,4	500
CLPCTS0110000	11	10,3	8	0,7	4	10,9 ÷ 11,5	500
CLPCTS0120000	12	11,1	8	0,7	4	11,9 ÷ 12,6	500
CLPCTS0140000	14	12,9	8	0,8	4	13,8 ÷ 14,6	500
CLPCTS0150000	15	13,5	8	0,8	4,5	14,8 ÷ 15,8	500
CLPCTS0170000	17	15,6	8	0,8	4,5	16,8 ÷ 18	500
CLPCTS0200000	20	18,4	8	0,8	3,2	20 ÷ 21,3	500

MATERIAL
W1 (Band-Housing-Screw: White galvanized steel)
W4 (Band-Housing-Screw: AISI304)

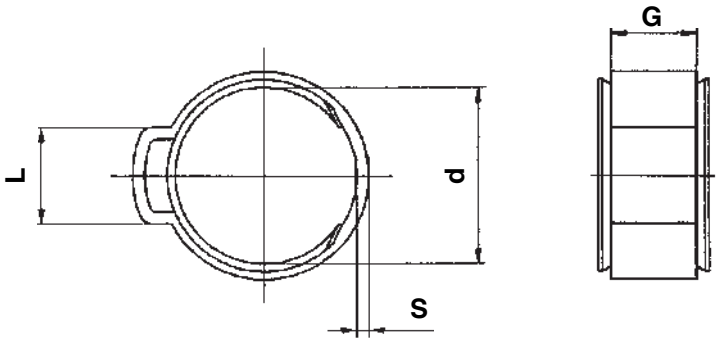

Code W1	Code W4	DN (min-max)	d (±0,3)	G (±0,3)	S (±10%)	L (±0,2)	Package (pcs)
CLPSG09000000	**CLPSGX0900000**	7,5 ÷ 8,5	8,5	6	0,8	5,5	100
CLPSG10000000	**CLPSGX1000000**	8 ÷ 9,5	9,5	6	0,8	6	100
CLPSG11000000	**CLPSGX1100000**	9 ÷ 10,5	10,5	6,5	0,8	6,5	100
CLPSG12000000	**CLPSGX1200000**	10 ÷ 11,5	11,5	6,5	0,8	7	100
CLPSG12800000	**CLPSGX1280000**	10,5 ÷ 12,5	12,5	6,5	0,9	7,5	100
CLPSG14000000	**CLPSGX1400000**	11,5 ÷ 13,5	13,5	7	1	8	100
-	**CLPSGX1500000**	12,4 ÷ 14,5	14,5	7	1	8,5	100
CLPSG16000000	**CLPSGX1600000**	13 ÷ 15,3	15,3	7	1,1	8,5	100
-	**CLPSGX1700000**	14,5 ÷ 16,3	16,3	7	1	9	100
CLPSG18000000	**CLPSGX1800000**	15 ÷ 17,3	17,3	7	1,2	9,5	100
CLPSGX1900000	-	16 ÷ 18,3	18,3	7,5	1	9,5	100
CLPSGX2000000	-	17 ÷ 19,3	19,3	7,5	1	10	100

MATERIAL
W1 (Band-Housing-Screw: White galvanized steel)

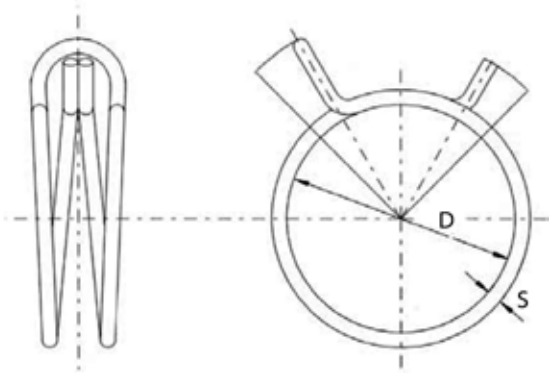

Code W1	DN (min-max)	D (ideal)	S	Package (pcs)
CLPBIFM055000	5,6 ÷ 6	5,8	0,8	5.000
CLPBIFM068000	6,6 ÷ 7	6,8	1	5.000
CLPBIFM073000	7 ÷ 7,5	7,3	1	5.000
CLPBIFM076000	7,3 ÷ 7,8	7,6	1	5.000
CLPBIFM081000	7,8 ÷ 8,3	8,1	1	5.000
CLPBIFM086000	8,3 ÷ 8,8	8,6	1	5.000
CLPBIFM091000	8,8 ÷ 9,3	9,1	1	5.000
CLPBIFM096000	9,3 ÷ 9,8	9,6	1	5.000
CLPBIFM101000	9,8 ÷ 10,4	10,1	1,2	5.000
CLPBIFM107000	10,4 ÷ 11	10,7	1,2	1.000
CLPBIFM113000	11 ÷ 11,6	11,3	1,2	1.000
CLPBIFM119000	11,6 ÷ 12,2	11,9	1,5	1.000
CLPBIFM126000	12,2 ÷ 12,9	12,6	1,5	1.000
CLPBIFM128000	12,1 ÷ 13,1	12,8	1,5	1.000
CLPBIFM133000	12,9 ÷ 13,6	13,3	1,5	1.000
CLPBIFM137000	13,3 ÷ 14,1	13,7	1,5	1.000
CLPBIFM140000	13,6 ÷ 14,4	14	1,5	1.000
CLPBIFM148000	14,4 ÷ 15,1	14,8	1,8	1.000
CLPBIFM155000	14,8 ÷ 15,9	15,5	1,6	1.000
CLPBIFM156000	15,1 ÷ 15,9	15,6	1,8	1.000
CLPBIFM158000	15,5 ÷ 16,3	15,8	1,8	1.000
CLPBIFM164000	15,9 ÷ 16,8	16,4	1,8	1.000
CLPBIFM173000	16,8 ÷ 17,7	17,3	1,8	1.000
CLPBIFM182000	17,7 ÷ 18,7	18,2	1,9	1.000
CLPBIFM192000	18,7 ÷ 19,5	19,2	2	1.000
CLPBIFM202000	19,6 ÷ 20,5	20,2	2	500
CLPBIFM212000	20,6 ÷ 21,6	21,2	2	500
CLPBIFM221000	21,5 ÷ 22,6	22,1	2,2	500

Code W1	DN (min-max)	D (ideal)	S	Package (pcs)
CLPBIFM226000	22 ÷ 23,1	22,6	2,2	500
CLPBIFM231000	22,4 ÷ 23,6	23,1	2,2	500
CLPBIFM242000	23,5 ÷ 24,7	24,2	2,2	500
CLPBIFM252000	24,5 ÷ 25,8	25,2	2,5	500
CLPBIFM258000	25,1 ÷ 26,4	25,8	2,5	500
CLPBIFM263000	25,6 ÷ 26,9	26,3	2,5	500
CLPBIFM275000	26,7 ÷ 28,1	27,5	2,5	500
CLPBIFM287000	27,9 ÷ 29,4	28,7	2,5	500
CLPBIFM300000	29,3 ÷ 30,9	30	2,8	500
CLPBIFM313000	30,4 ÷ 32	31,3	2,8	500
CLPBIFM327000	31,8 ÷ 33,4	32,7	2,8	500
CLPBIFM341000	33,2 ÷ 34,8	34,1	2,8	500
CLPBIFM350000	33,9 ÷ 35,7	35	2,8	100
CLPBIFM356000	34,6 ÷ 36,4	35,6	3	100
CLPBIFM372000	36,2 ÷ 38	37,5	3	100
CLPBIFM388000	37,7 ÷ 39,7	38,8	3,2	100
CLPBIFM396000	38,5 ÷ 40,5	39,6	3,2	100
CLPBIFM405000	39,4 ÷ 41,4	40,5	3,2	100
CLPBIFM415000	40,7 ÷ 42,3	41,5	3,2	100
CLPBIFM422000	41 ÷ 43,2	42,2	3,2	100
CLPBIFM440000	42,8 ÷ 45	44	3,2	100
CLPBIFM458000	44,6 ÷ 46,8	45,8	3,2	100
CLPBIFM478000	46,5 ÷ 48,9	47,8	3,2	100
CLPBIFM498000	48,8 ÷ 50,9	49,8	3,5	100
CLPBIFM520000	50,6 ÷ 53,2	52	3,5	100
CLPBIFM542000	52,7 ÷ 55,4	54,2	3,5	100
CLPBIFM574000	56 ÷ 58,8	57,4	3,5	100
CLPBIFM596000	58,2 ÷ 61	59,6	3,5	100

4

CABLE MANAGEMENT

Wire/cable clips
page 4.1

Twist lock clips
page 4.15

Cable grommets and clamps
page 4.17

OMEGA CABLE CLIP
Snap Lock

MATERIAL
PA6.6 (Polyamide)

COLOUR
(NA) Natural
(NE) Black

SELF-EXTINGUISHING
UL 94 V-2

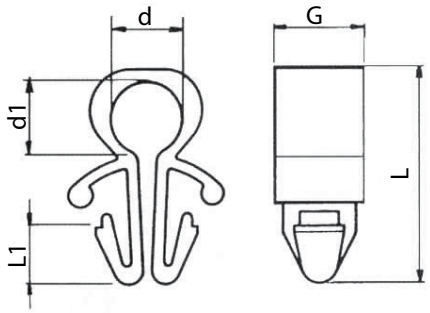

Code (NA)	Code (NE)	d1	d	G	L1	L	Panel hole	Panel thickness	Package (pcs)
MFF2306505000	**-**	5	8,5	8	5	13	6,5	1 ÷ 3	2.500
-	**MFF2306506AN8**	6,6	6,6	7,8	5	19	6,5	2,5 ÷ 4	2.500
MFF2306506000	**-**	6,8	6,8	8	5	17,5	6,5	1 ÷ 2,5	2.500
MFF2306012000	**-**	12	16	8	6	27	6	0,5 ÷ 2	5.000
K4F6765038000	**-**	-	4,2	6,55	6,5	16,9	6,5	1,2	1.000
K4F6860045000	**-**	-	5,2	6,9	5,6	15,3	6	2	1.000
K4F6660050000	**-**	-	6,2	6,9	5,6	16	6	2	1.000
K4F6660070000	**-**	-	8,2	6,9	5,6	17,6	6	2	1.000

MATERIAL
PA6.6 (Polyamide)

COLOUR
(NA) Natural
(NE) Black
(GR) Grey

SELF-EXTINGUISHING
UL 94 V-2

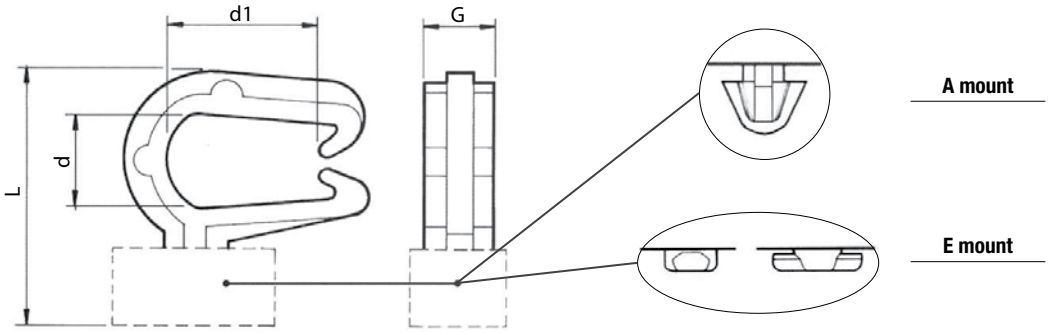

Code (NA)	Code (NE)	Code (GR)	d	d1	G	L	Panel hole	Panel thickness	Mount	Package (pcs)
MFF2205505000	-	-	5,8	-	9	13	12,5 x 5,5	0,7 ÷ 1,2	E	4.000
-	**MFF18065070N8**	-	7,5	9	6,3	23,5	6,5	0,5 ÷ 1,5	A	5.000
MFF1805010000	-	-	10,5	16	6,5	26	5	0,6 ÷ 1,7	A	3.000
-	**MFF18065100N8**	-	10,5	16	7,5	29,5	6,5	0,8 ÷ 2	A	10.000
MFF2205511000	-	-	11	-	9	19,5	12,5 x 5,5	0,7 ÷ 1,2	E	5.000
-	-	**MFF22065110O4**	11	-	9	24	15,5 x 6,5	0,7 ÷ 1,2	E	3.600

RIBBED CABLE CLIP
screw mount

MATERIAL
PA6.6 (Polyamide)

COLOUR
(NA) Natural

SELF-EXTINGUISHING
UL 94 V-2

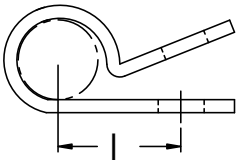

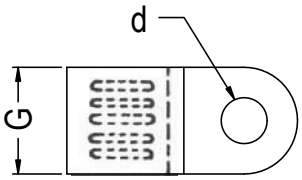

Code (NA)	Tightening diameter (max)	G	l	d	Package (pcs)
MFF3104206000	6	10	10	4,2	2.500

MATERIAL
PA6.6 (Polyamide)

COLOUR
(NA) Natural

SELF-EXTINGUISHING
UL 94 V-2

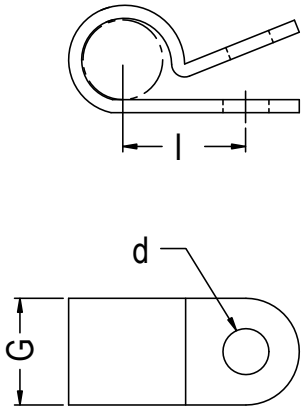

Code (NA)	Tightening diameter (max)	G	d	l	Package (pcs)
KGF0244030000	3	9,9	4,4	8,5	1.000
KGF0254030000	3	13,2	5,4	8,9	1.000
KGF0238032000	3,2	6,5	3,8	6,8	1.000
KGF0254032000	3,2	9,2	5,4	8,2	1.000
KGF0237035000	3,5	6,3	3,7	6,4	1.000
KGF0244045000	4,5	9,9	4,4	7,75	1.000
KGF0254045000	4,5	10	5,4	10,2	1.000
KGF0242050000	5	10	4,2	9,5	1.000
KGF0244056000	5,6	9,6	4,4	12,1	1.000
KGF0264056000	5,6	11,6	6,4	12,1	1.000
KGF0250062000	6,2	9,3	5	10,2	1.000
KGF0243065000	6,5	10	4,3	9,9	1.000
KGF0250075000	7,5	10,9	5	10,5	1.000
KGF0266075000	7,5	12,9	6,6	10,5	1.000
KGF0250076000	7,6	9,5	5	10,5	1.000
KGF0254080000	8	9,2	5,4	10,7	1.000
KGF0232083000	8,3	9,5	3,2	12	1.000
KGF0248090000	9	9,5	4,8	12,4	1.000
KGF0254090000	9	12,3	5,4	13,2	500
KGF0242110000	11	10	4,2	13	1.000
KGF0242115000	11,5	10	4,2	14	1.000
KGF0248115000	11,5	12,7	4,8	14,7	500
KGF0254128000	12,8	12,9	5,4	16	500
KGF0248155000	15,5	12,5	4,8	17,1	500
KGF0254170000	17	12,9	5,4	20,2	200
KGF0254200000	20	12,9	5,4	21,2	250

OPEN CABLE CLIP
screw mount

MATERIAL
PA6.6 (Polyamide)

COLOUR
(NA) Natural
(NE) Black

SELF-EXTINGUISHING
UL 94 V-2

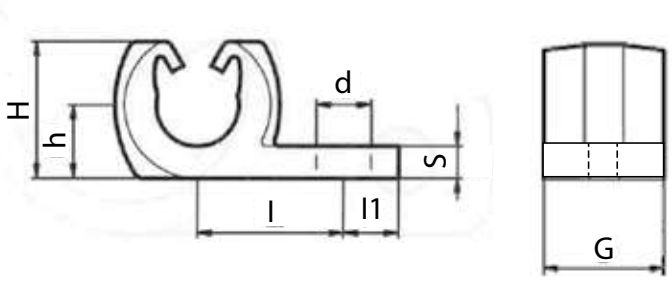

Code (NA)	Code (NE)	Tightening diameter (max)	H	h	d	S	l	l1	G	Package (pcs)
MFF1104307000	-	7,5	13	7	4,3	3	14	6	10	5.000
-	**MFF11060090N8**	9	15	8	6	3,5	16	6	10	3.500
-	**MFF11062110N8**	11,2	16	8	6,2	2,2	20	6	11	3.500
MFF1105014000	-	14,5	24	-	5	1,8	20	7,5	12	5.000

MATERIAL
PA6.6 (Polyamide)

COLOUR
(NE) Black
(NA) Natural

SELF-EXTINGUISHING
UL 94 V-2

NOTES
Install with self-tapping screws D.4,2.

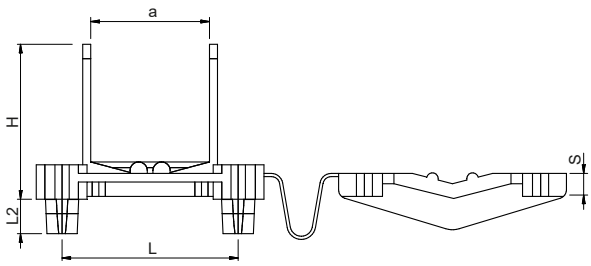

Code (NE)	Code (NA)	Tightening diameter (max)	L	L2	a	S	H	Panel hole	Panel thickness	Package (pcs)
-	**KGFA366700000**	14	31	6	15	4	24	7x7	1,2 ÷ 2	500
MFF34076160N8	-	16	37	8,25	21	4	24	7,6	0,8 ÷ 2,5	360
-	**MFF3406514000**	14	31	6	15	4	30	7x7	1,2 ÷ 2	360

SADDLE CABLE CLIP
screw mount

MATERIAL
PA6.6 (Polyamide)

COLOUR
(NA) Natural
(NE) Black

SELF-EXTINGUISHING
UL 94 V-2

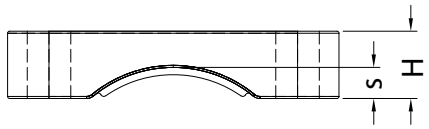

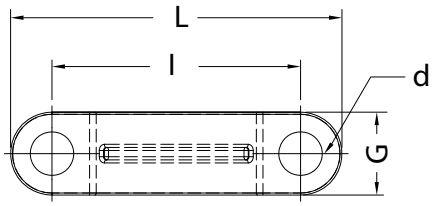

Code (NA)	Code (NE)	L	G	s	H	l	d	Package (pcs)
KGS5524440600	**-**	32	8	3	6,5	24	4,2	1.000
-	**MS007182604N8**	26	6,2	-	3	18	4	1.000

MATERIAL
PA6.6 (Polyamide)

COLOUR
(NA) Natural

SELF-EXTINGUISHING
UL 94 V-2

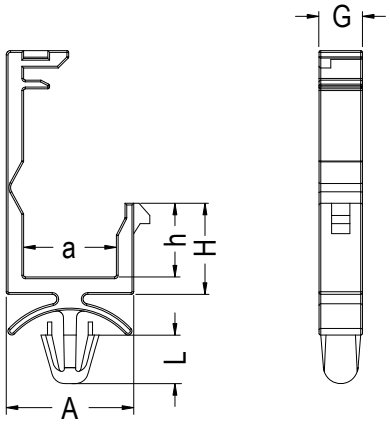

Code (NA)	A	a	G	h	L	H	Panel hole	Panel thickness	Package (pcs)
KGF2348045000	14,7	10,7	5	4,5	5,6	6,5	4,8	2	1.000
KGF2348085000	14,7	10,7	5	8,5	5,6	10,5	4,8	2	500
KGF2335031000	17,5	13,5	5	3,1	3	5,1	3,5	1,8	1.000
KGF2348031000	17,5	13,5	5	3,1	5,6	5,1	4,8	2	1.000
KGF2348097000	20,3	16,3	5	9,7	5,6	11,7	4,8	2	500
KGF2348138000	20,3	16,3	5	13,8	5,6	15,8	4,8	2	500
KGF2348160000	22	18	5	21,4	5,6	23,4	4,8	2	500

TOP INSERTION WIRE SADDLE
Snap Lock

MATERIAL
PA6.6 (Polyamide)

COLOUR
(NA) Natural

SELF-EXTINGUISHING
UL 94 V-2

CERTIFICATION
UL1565

E217732

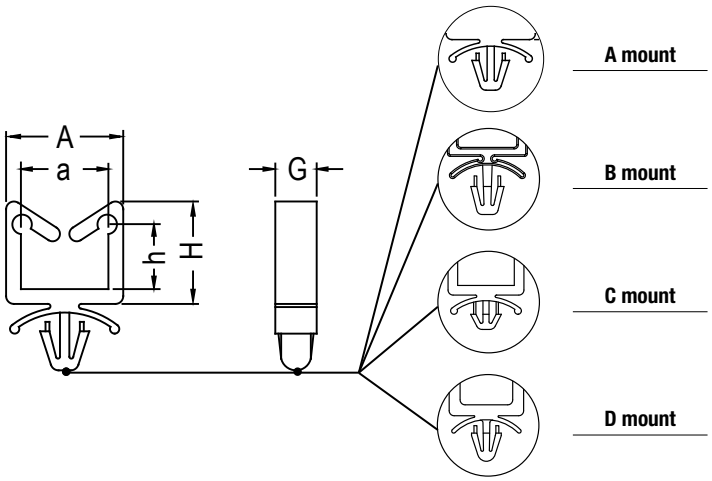

Code (NA)	A	a	G	H	h	Panel hole	Panel thickness	Mount	Certification	Package (pcs)
KGF2848153000	15	10,6	5,2	20	15,3	4,8	0,8 ÷ 2,2	D	-	500
KGF2548072000	15	11,2	5,3	12	7,2	4,8 ÷ 5	0,8 ÷ 2	A	UL1565	1.000
KGF2548072A00	15	11,2	5,3	12	7,2	4,8 ÷ 5	2,2	A	-	1.000
KGF2748122000	15	11,2	5,3	17	12,2	4,8	0,8 ÷ 2,2	C	-	500
KGF2548122A00	15	11,2	5,3	17	12,2	4,8 ÷ 5	0,8 ÷ 2	A	UL1565	500
KGF2548212000	15	11,2	5,3	26	21,2	4,8 ÷ 5	0,8 ÷ 2	A	UL1565	500
KGF2548292000	15	11,2	5,3	34	29,2	4,8 ÷ 5	0,8 ÷ 2	A	UL1565	500
KGF2647116000	15,1	11,1	5,6	17,8	11,65	4,75	1,6 ÷ 3,2	B	-	500

MATERIAL
PA6.6 (Polyamide)

COLOUR
(NA) Natural

SELF-EXTINGUISHING
UL 94 V-2

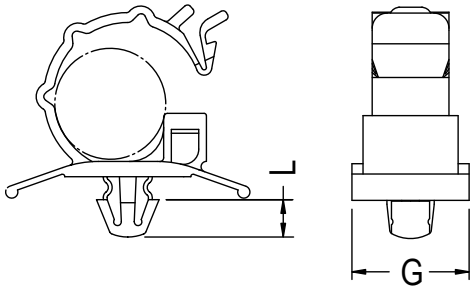

Code (NA)	Tightening diameter (max)	L	G	Panel hole	Panel thickness	Package (pcs)
KGF2464070000	7	4,9	15	6,4	0,8 ÷ 2,3	200
KGF2464103000	10,3	4,9	17,2	6,4	0,8 ÷ 2,3	200
KGF2464130000	13	4,9	19,2	6,4	0,5 ÷ 2,3	200
KGF2464148000	14,8	4,9	19,3	6,4	0,8 ÷ 2,3	200
KGF2464160000	16	4,9	21,3	6,4	0,5 ÷ 2,3	200
KGF2464200000	20	4,9	23,2	6,4	0,5 ÷ 2,3	200
KGF2464200A00	20	4,9	23,2	6,4	2,3 ÷ 4,1	200

SIDE CLOSURE CABLE CLAMP
adhesive mount

MATERIAL
PA6.6 (Polyamide)

COLOUR
(NA) Natural

ADHESIVE
Rubber base

SELF-EXTINGUISHING
UL 94 V-2

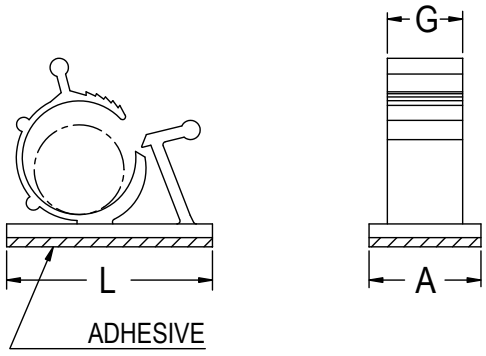

Code (NA)	Tightening diameter (max)	L	A	G	Package (pcs)
KGF5219068000	6,8	19	19	8,8	500
KGF5221082000	8,2	21	19	9,2	500
KGF5225090000	9	25	20	12	250
KGF5221104000	10,4	21,6	17	12	250
KGF5225106000	10,6	25	19,7	12,1	250
KGF5229126000	12,6	29	20	14	250
KGF5229128000	12,8	29,6	19,5	14,8	250

MATERIAL
PA6.6 (Polyamide)

COLOUR
(NA) Natural
(NE) Black

ADHESIVE
Rubber base

SELF-EXTINGUISHING
UL 94 V-2

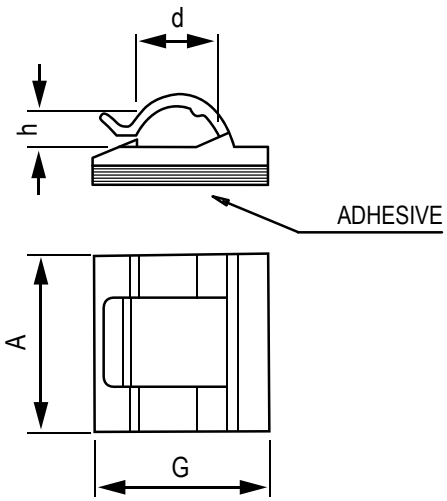

Code (NA)	Code (NE)	Tightening diameter (max)	A	G	h	d	Package (pcs)
-	**MFF01020300N8**	2 x 5	30	16	5	10	4.000
MFF0108025000	-	8	25	25	8,5	11,5	5.000
-	**MFF01110220N8**	11	22	22	10	18	1.000
MFF0116025000	**MFF01160250N8**	16	25	25	14,5	18	4000
MFF0105019000	-	5	19	19	5	4,9	12.000

FLAT CABLE CLAMP
adhesive/screw mount

MATERIAL
PA6.6 (Polyamide)

COLOUR
(NA) Natural

ADHESIVE
Rubber base

SELF-EXTINGUISHING
UL 94 V-2

TYPE A

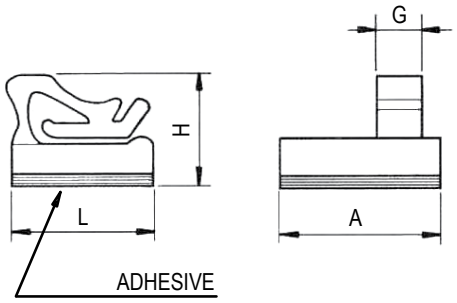

TYPE B

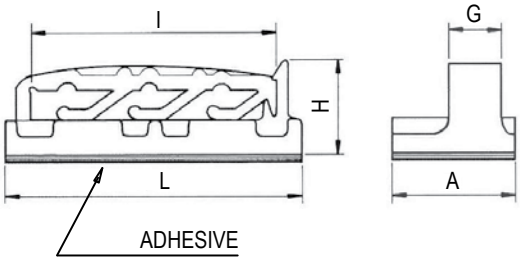

Code (NA)	L	A	G	H	I	Mounting type	Type	Package (pcs)
MFF051616A000	16	16	7	10	-	Adhesive	A	1.000
MFF061644A000	44	16	8	13	33,5	Adhesive	B	1.000
MFF061644V000	44	16	8	12	33,5	Screw	B	1.000
MFF061662A000	62	16	8	13	51,5	Adhesive	B	1.000
MFF061662V000	62	16	8	12	51,5	Screw	B	1.000

MATERIAL
PA6.6 (Polyamide)

COLOUR
GR Grey

ADHESIVE
FMS 319 (-20°C ÷ 50°C)

SELF-EXTINGUISHING
UL 94 V-2

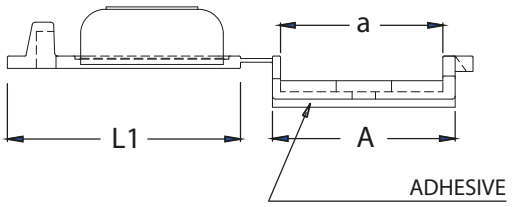

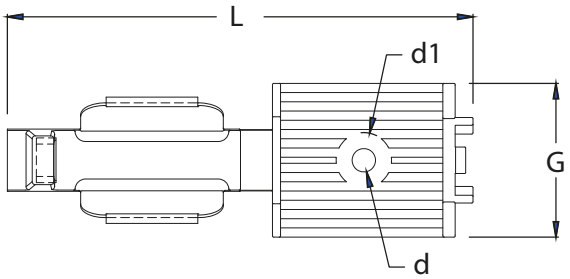

Code GR	Tightening diameter (max)	A	G	a	L	L1	d	d1	Package (pcs)
FG00938297004	5	29,7	25	25,4	75,8	37,9	3,8	9	100

MATERIAL
PA6.6 (Polyamide)

COLOUR
(NA) Natural

SELF-EXTINGUISHING
UL 94 V-2

CERTIFICATION
UL1565

E217732

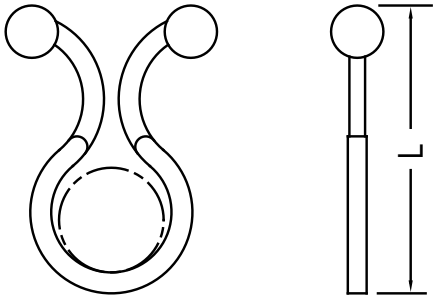

Code (NA)	Tightening diameter (max)	L	Certification	Package (pcs)
KGF8204017000	4	17,8	UL1565	1.000
KGF8204222000	4,2	22	-	500
KGF8205016000	5	16,5	-	500
KGF8207323000	7,3	23,8	UL1565	1.000
MFF3208525000	8,5	25	-	2.500
KGF8209730000	9,7	30	-	500
KGF8210027000	10	27,5	UL1565	1.000
KGF8211532000	11,5	32,5	-	500
MFF3212530000	12,5	30	-	2.500
KGF8213535000	13,5	35	-	500
KGF8213830000	13,8	30,4	UL1565	1.000
KGF8214535000	14,5	35,1	-	500
KGF8216338000	16,3	38,5	-	500
KGF8217040000	17	40	-	500
KGF8217235000	17,2	35	UL1565	1.000
KGF8219542000	19,5	42	UL1565	500
KGF8220040000	20	40	-	500
KGF8224241000	24,2	41,4	UL1565	500
KGF8226855000	26,8	55,5	-	500
KGF8227046000	27	46	-	500

MATERIAL
PA6.6 (Polyamide)

COLOUR
(NA) Natural

ADHESIVE
Rubber base

SELF-EXTINGUISHING
UL 94 V-2

CERTIFICATION
UL1565

E217732

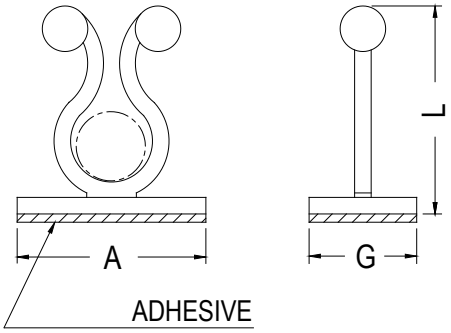

Code (NA)	Tightening diameter (max)	L	A	G	Certification	Package (pcs)
KGF5410058000	5,8	27,6	10	19,8	-	500
KGF5420072000	7,2	21,9	20	13	UL1565	500
KGF5425082000	8,2	27,9	25	13	UL1565	500
KGF5420085000	8,5	26,2	20	14	UL1565	500
KGF5418100000	10	27,3	18,5	21	-	500
KGF5421100000	10	28,2	21	19	UL1565	500
KGF5425132000	13,2	34,7	25	20	-	250
KGF5420138000	13,8	31,9	20	20	UL1565	250
KGF5425170000	17	37	25	13	UL1565	250
KGF5425200000	20	39	25	13	UL1565	250
KGF5428230000	23	41	28	15	UL1565	250
KGF5438340000	34	56,2	38	20	UL1565	100

MATERIAL
PVC (Polyvinyl chloride)

COLOUR
NE Black

SELF-EXTINGUISHING
HB UL 94

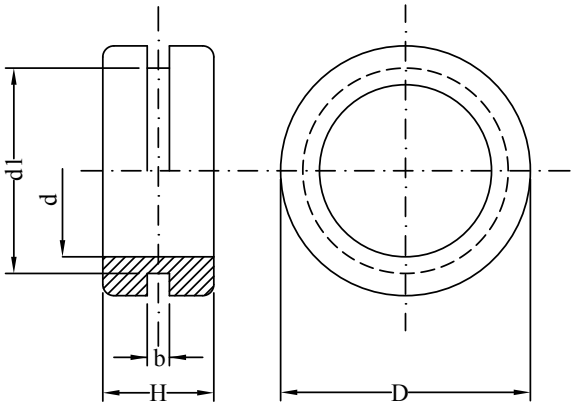

Code NE	d1	b	d	D	H	Package (pcs)
MFP01048031N8	4,8	1,6	3,2	8	6,4	1.000
MFP01060031N8	6	1,5	3	10	5,5	1.000
MFP0106003AN8	6	1,5	3,5	10	5,5	1.000
MFP01060041N8	6	1,5	4	10	5,5	1.000
MFP0106004AN8	6	1,5	4,5	10	5,5	1.000
MFP01060051N8	6	1,5	5	10	5,5	1.000
MFP01060032N8	6	2	3	10	6	1.000
MFP0106003BN8	6	2	3,5	10	6	1.000
MFP01060042N8	6	2	4	10	6	1.000
MFP0106004BN8	6	2	4,5	10	6	1.000
MFP01060052N8	6	2	5	10	6	1.000
MFP01060033N8	6	3	3	10	7	1.000
MFP0106003CN8	6	3	3,5	10	7	1.000
MFP01060043N8	6	3	4	10	7	1.000
MFP0106004CN8	6	3	4,5	10	7	1.000
MFP01070031N8	7	1	3,5	11,5	8	1.000
MFP01080041N8	8	1	4	12	8	1.000
MFP01080053N8	8	3	5	10	7	1.000
MFP01085062N8	8,5	2,5	6	14	7	1.000
MFP01090023N8	9	3,5	2	14	6,5	1.000
MFP01090033N8	9	3,5	3	14	6,5	1.000
MFP01090043N8	9	3,5	4	14	6,5	1.000
MFP01090053N8	9	3,5	5	14	6,5	1.000
MFP01090063N8	9	3,5	6	14	6,5	1.000
MFP01090073N8	9	3,5	7	14	6,5	1.000
MFP01090083N8	9	3,5	8	14	6,5	1.000
MFP01100021N8	10	1,5	2	15	6	1.000
MFP01100031N8	10	1,5	3	15	6	1.000
MFP01100041N8	10	1,5	4	15	6	1.000
MFP01100051N8	10	1,5	5	15	6	1.000
MFP01100061N8	10	1,5	6	15	6	1.000
MFP01100071N8	10	1,5	7	15	6	1.000
MFP0110007AN8	10	1,5	7	16	7	1.000
MFP0110008AN8	10	1,5	8	15	6	1.000
MFP01100081N8	10	1,5	8	14,5	6	1.000
MFP01100032N8	10	2	3	14	8	1.000
MFP01100042N8	10	2	4	14	8	1.000
MFP01100052N8	10	2	5	14	8	1.000

MATERIAL
PVC (Polyvinyl chloride)

COLOUR
NE Black

SELF-EXTINGUISHING
HB UL 94

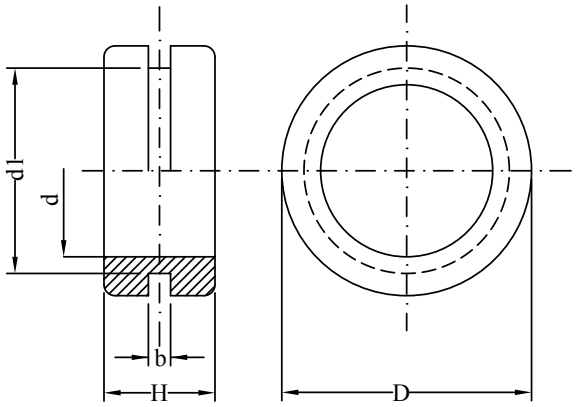

Code NE	d1	b	d	D	H	Package (pcs)
MFP01100062N8	10	2	6	14	8	1.000
MFP01100072N8	10	2	7	14	8	1.000
MFP01100082N8	10	2	8	14	8	1.000
MFP0110008BN8	10	2,5	8	14	8,5	1.000
MFP01100033N8	10	3	3	14	9	1.000
MFP01100043N8	10	3	4	14	9	1.000
MFP01100053N8	10	3	5	14	9	1.000
MFP01100063N8	10	3	6	14	9	1.000
MFP01100073N8	10	3	7	14	9	1.000
MFP01100083N8	10	3	8	14	9	1.000
MFP01100034N8	10	4	3	14	10	1.000
MFP01100044N8	10	4	4	14	10	1.000
MFP01100054N8	10	4	5	14	10	1.000
MFP01100064N8	10	4	6	14	10	1.000
MFP01100074N8	10	4	7	14	10	1.000
MFP01100084N8	10	4	8	14	10	1.000
MFP01100066N8	10	6	6	15	12	1.000
MFP01100086N8	10	6	8	15	12	1.000
MFP0210004JN8	10	19	4	13,5	25	1.000
MFP0210005JN8	10	19	5	13,5	25	1.000
MFP0210006JN8	10	19	6	13,5	25	1.000
MFP0210007JN8	10	19	7	13,5	25	1.000
MFP0210008JN8	10	19	8	13,5	25	1.000
MFP01110030N8	11	0,5	3	15	6	1.000
MFP01110040N8	11	0,5	4	16	6	1.000
MFP01110050N8	11	0,5	5	16	6	1.000
MFP01110060N8	11	0,5	6	16	6	1.000
MFP01110070N8	11	0,5	7	16	6	1.000
MFP01110080N8	11	0,5	8	16	6	1.000
MFP01110090N8	11	0,5	9	16	6	1.000
MFP01110081N8	11	1	8	14	6	1.000
MFP01110031N8	11	1,5	3	16	7	1.000
MFP01110041N8	11	1,5	4	15	7,5	1.000
MFP01110041N8	11	1,5	4	15	7,5	1.000
MFP0111004AN8	11	1,5	4	16	7	1.000
MFP01110051N8	11	1,5	5	15	7,5	1.000
MFP01110051N8	11	1,5	5	15	7,5	1.000
MFP0111005AN8	11	1,5	5	16	7	1.000

MATERIAL
PVC (Polyvinyl chloride)

COLOUR
NE Black

SELF-EXTINGUISHING
HB UL 94

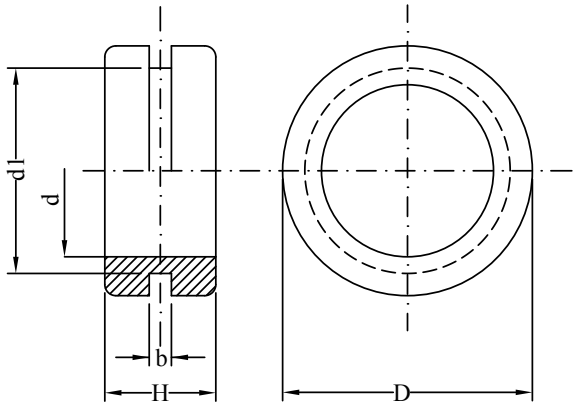

Code NE	d1	b	d	D	H	Package (pcs)
MFP01110061N8	11	1,5	6	15	7,5	1.000
MFP01110061N8	11	1,5	6	15	7,5	1.000
MFP0111006AN8	11	1,5	6	16	7	1.000
MFP01110071N8	11	1,5	7	15	7,5	1.000
MFP0111007AN8	11	1,5	7	16	7	1.000
MFP0111008AN8	11	1,5	8	15	7,5	1.000
MFP0111008BN8	11	1,5	8	16	7	1.000
MFP01110091N8	11	1,5	9	15	7,5	1.000
MFP0111009AN8	11	1,5	9	16	7	1.000
MFP01110032N8	11	2,5	3	16	8	1.000
MFP01110042N8	11	2,5	4	16	8	1.000
MFP01110052N8	11	2,5	5	16	8	1.000
MFP01110062N8	11	2,5	6	16	8	1.000
MFP01110072N8	11	2,5	7	16	8	1.000
MFP01110082N8	11	2,5	8	16	8	1.000
MFP01110092N8	11	2,5	9	16	8	1.000
MFP01110059N8	11	9	5	14	15	1.000
MFP01110069N8	11	9	6	14	15	1.000
MFP01110079N8	11	9	7	14	15	1.000
MFP01110089N8	11	9	8	14	15	1.000
MFP01115081N8	11,5	1,2	8,5	14,5	8	1.000
MFP01115042N8	11,5	2	4	14,5	10	1.000
MFP01115052N8	11,5	2	5	14,5	10	1.000
MFP01115062N8	11,5	2	6	14,5	10	1.000
MFP01115072N8	11,5	2	7	14,5	10	1.000
MFP01115082N8	11,5	2	8	14,5	10	1.000
MFP01115092N8	11,5	2	9	14,5	10	1.000
MFP01115102N8	11,5	2	10	14,5	10	1.000
MFP01115043N8	11,5	3	4	14,5	11	1.000
MFP0111504AN8	11,5	3	4	16	8	1.000
MFP01115053N8	11,5	3	5	14,5	11	1.000
MFP0111505AN8	11,5	3	5	16	8	1.000
MFP01115063N8	11,5	3	6	14,5	11	1.000
MFP0111506AN8	11,5	3	6	16	8	1.000
MFP01115073N8	11,5	3	7	14,5	11	1.000
MFP0111507AN8	11,5	3	7	16	8	1.000

MATERIAL
PVC (Polyvinyl chloride)

COLOUR
(NE) Black

SELF-EXTINGUISHING
HB UL 94

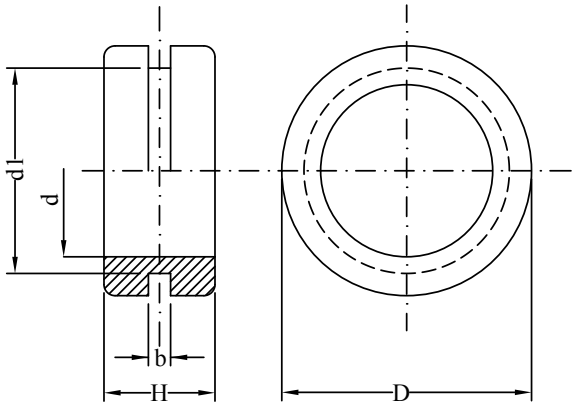

Code (NE)	d1	b	d	D	H	Package (pcs)
MFP01115083N8	11,5	3	8	14,5	11	1.000
MFP0111508AN8	11,5	3	8	16	8	1.000
MFP01115093N8	11,5	3	9	14,5	11	1.000
MFP01115103N8	11,5	3	10	14,5	11	1.000
MFP01115044N8	11,5	4	4	14,5	12	1.000
MFP01115054N8	11,5	4	5	14,5	12	1.000
MFP01115064N8	11,5	4	6	14,5	12	1.000
MFP01115074N8	11,5	4	7	14,5	12	1.000
MFP01115084N8	11,5	4	8	14,5	12	1.000
MFP01115094N8	11,5	4	9	14,5	12	1.000
MFP01115104N8	11,5	4	10	14,5	12	1.000
MFP01115048N8	11,5	8	4	17,5	13,5	1.000
MFP01115058N8	11,5	8	5	17,5	13,5	1.000
MFP01115068N8	11,5	8	6	17,5	13,5	1.000
MFP01115078N8	11,5	8	7	17,5	13,5	1.000
MFP01115088N8	11,5	8	8	17,5	13,5	1.000
MFP01115098N8	11,5	8	9	17,5	13,5	1.000
MFP01115108N8	11,5	8	10	17,5	13,5	1.000
MFP01120041N8	12	1,5	4	17	7	1.000
MFP01120051N8	12	1,5	5	17	7	1.000
MFP01120061N8	12	1,5	6	17	7	1.000
MFP01120071N8	12	1,5	7	17	7	1.000
MFP0112007AN8	12	1,5	7	18	11,5	1.000
MFP01120081N8	12	1,5	8	17	7	1.000
MFP01120091N8	12	1,5	9	17	7	1.000
MFP01120101N8	12	1,5	10	17	7	1.000
MFP01120092N8	12	2	9	16	6	1.000
MFP01120073N8	12	3	7	18	10	1.000
MFP01120083N8	12	3	8	18	10	1.000
MFP01120093N8	12	3	9	18	10	1.000
MFP01120103N8	12	3	10	18	10	1.000
MFP01130095N8	13	5	9	20	10	1.000
MFP01130027N8	13	7	2	16	13	1.000
MFP01130047N8	13	7	4	16	13	1.000
MFP01130067N8	13	7	6	16	13	1.000
MFP01130087N8	13	7	8	16	13	1.000
MFP01130107N8	13	7	10	16	13	1.000
MFP01135102N8	13,5	2	10	17,5	7	1.000

MATERIAL
PVC (Polyvinyl chloride)

COLOUR
NE Black

SELF-EXTINGUISHING
HB UL 94

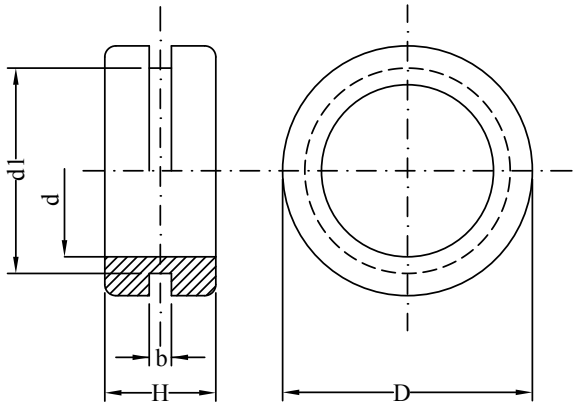

Code NE	d1	b	d	D	H	Package (pcs)
MFP01135103N8	13,5	3	10	17,5	8	1.000
MFP01135104N8	13,5	4	10	17,5	9	1.000
MFP0113505AN8	13,5	10	5	16	14	1.000
MFP0113506AN8	13,5	10	6	16	14	1.000
MFP0113507AN8	13,5	10	7	16	14	1.000
MFP0113508AN8	13,5	10	8	16	14	1.000
MFP0113509AN8	13,5	10	9	16	14	1.000
MFP0113510AN8	13,5	10	10	16	14	1.000
MFP01140103N8	14	3	10	20	9	1.000
MFP01140123N8	14	3	12	20	9	1.000
MFP01150071N8	15	1,5	7	18,5	8	1.000
MFP01150081N8	15	1,5	8	18,5	8	1.000
MFP01150091N8	15	1,5	9	18,5	8	1.000
MFP01150101N8	15	1,5	10	18,5	8	1.000
MFP01150111N8	15	1,5	11	18,5	8	1.000
MFP01150121N8	15	1,5	12	18,5	8	1.000
MFP0115012AN8	15	1,5	12	19	8	1.000
MFP01150131N8	15	1,5	13	18,5	8	1.000
MFP01150072N8	15	2	7	20,5	7	1.000
MFP01150082N8	15	2	8	20,5	7	1.000
MFP01150092N8	15	2	9	20,5	7	1.000
MFP01150102N8	15	2	10	20,5	7	1.000
MFP01150112N8	15	2	11	20,5	7	1.000
MFP01150122N8	15	2	12	20,5	7	1.000
MFP01150132N8	15	2	13	20,5	7	1.000
MFP0115007AN8	15	2,5	7	18,5	9	1.000
MFP0115008AN8	15	2,5	8	18,5	9	1.000
MFP0115009AN8	15	2,5	9	18,5	9	1.000
MFP0115010AN8	15	2,5	10	18,5	9	1.000
MFP0115011AN8	15	2,5	11	18,5	9	1.000
MFP0115012BN8	15	2,5	12	18,5	9	1.000
MFP0115012CN8	15	2,5	12	19	9	1.000
MFP0115013AN8	15	2,5	13	18,5	9	1.000
MFP01150103N8	15	3	10	22	9	1.000
MFP01150073N8	15	3,5	7	18,5	10	1.000
MFP01150083N8	15	3,5	8	18,5	10	1.000
MFP01150093N8	15	3,5	9	18,5	10	1.000
MFP0115010BN8	15	3,5	10	18,5	10	1.000

MATERIAL
PVC (Polyvinyl chloride)

COLOUR
(NE) Black

SELF-EXTINGUISHING
HB UL 94

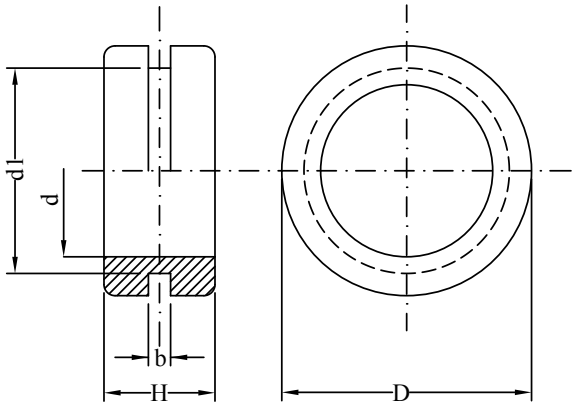

Code (NE)	d1	b	d	D	H	Package (pcs)
MFP01150113N8	15	3,5	11	18,5	10	1.000
MFP01150123N8	15	3,5	12	18,5	10	1.000
MFP0115012DN8	15	3,5	12	19	10	1.000
MFP01150133N8	15	3,5	13	18,5	10	1.000
MFP01150065N8	15	5	6	21	10	1.000
MFP01150075N8	15	5	7	21	10	1.000
MFP01150085N8	15	5	8	21	10	1.000
MFP01150095N8	15	5	9	21	10	1.000
MFP01150105N8	15	5	10	21	10	1.000
MFP01150115N8	15	5	11	21	10	1.000
MFP01150125N8	15	5	12	21	10	1.000
MFP01180102N8	18	2	10	23	8	1.000
MFP0118010AN8	18	2	10	24	7,5	1.000
MFP01180112N8	18	2	11	23	8	1.000
MFP0118011AN8	18	2	11	24	7,5	1.000
MFP01180122N8	18	2	12	23	8	1.000
MFP0118012AN8	18	2	12	24	7,5	1.000
MFP01180132N8	18	2	13	23	8	1.000
MFP0118013AN8	18	2	13	24	7,5	1.000
MFP01180142N8	18	2	14	23	8	1.000
MFP0118014AN8	18	2	14	24	7,5	1.000
MFP01180152N8	18	2	15	23	8	1.000
MFP0118015AN8	18	2	15	24	7,5	1.000
MFP01180162N8	18	2	16	23	8	1.000
MFP0118016AN8	18	2	16	24	7,5	1.000
MFP01180103N8	18	3	10	24	8,5	1.000
MFP01180113N8	18	3	11	24	8,5	1.000
MFP01180123N8	18	3	12	24	8,5	1.000
MFP01180133N8	18	3	13	24	8,5	1.000
MFP01180143N8	18	3	14	24	8,5	1.000
MFP01180153N8	18	3	15	24	8,5	1.000
MFP01180163N8	18	3	16	24	8,5	1.000
MFP01180104N8	18	4	10	24	9,5	1.000
MFP01180114N8	18	4	11	24	9,5	1.000
MFP01180124N8	18	4	12	24	9,5	1.000
MFP01180134N8	18	4	13	24	9,5	1.000
MFP01180144N8	18	4	14	24	9,5	1.000
MFP01180154N8	18	4	15	24	9,5	1.000

MATERIAL
PVC (Polyvinyl chloride)

COLOUR
NE Black

SELF-EXTINGUISHING
HB UL 94

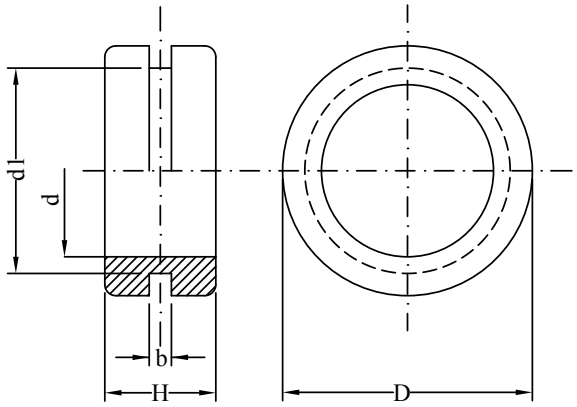

Code NE	d1	b	d	D	H	Package (pcs)
MFP01180164N8	18	4	16	24	9,5	1.000
MFP01210162N8	21	2	16	28	8	1.000
MFP01210163N8	21	3	16	28	9	1.000
MFP01210164N8	21	4	16	28	10	1.000
MFP01210127N8	21	7	12	26	14	1.000
MFP01210137N8	21	7	13	26	14	1.000
MFP01210147N8	21	7	14	26	14	1.000
MFP01230192N8	23	2	19	28	8	1.000
MFP01230193N8	23	3	19	28	9	1.000
MFP01230194N8	23	4	19	28	10	1.000
MFP01240152N8	24	2	15,5	32	8,5	1.000
MFP01240172N8	24	2	17,5	32	8,5	1.000
MFP01240192N8	24	2	19,5	32	8,5	1.000
MFP01240153N8	24	3	15,5	32	9,5	1.000
MFP01240173N8	24	3	17,5	32	9,5	1.000
MFP01240193N8	24	3	19,5	32	9,5	1.000
MFP01240154N8	24	4	15,5	32	10,5	1.000
MFP01240174N8	24	4	17,5	32	10,5	1.000
MFP01240194N8	24	4	19,5	32	10,5	1.000
MFP01260182N8	26	2	18	35	8,5	1.000
MFP01260202N8	26	2	20	35	8,5	1.000
MFP01260222N8	26	2	22	35	8,5	1.000
MFP01260183N8	26	3	18	35	9,5	1.000
MFP01260203N8	26	3	20	35	9,5	1.000
MFP01260223N8	26	3	22	35	9,5	1.000
MFP01260184N8	26	4	18	35	10,5	1.000
MFP01260204N8	26	4	20	35	10,5	1.000
MFP01260224N8	26	4	22	39	10,5	1.000
MFP01340282N8	34	2	28	39	7	1.000
MFP01340283N8	34	3	28	39	8	1.000
MFP01340284N8	34	4	28	39	9	1.000
MFP01390352N8	39	2	35	45	7	1.000
MFP01390353N8	39	3	35	45	8	1.000
MFP01390354N8	39	4	35	45	9	1.000

MATERIAL
PVC (Polyvinyl chloride)

COLOUR
NE Black

SELF-EXTINGUISHING
HB UL 94

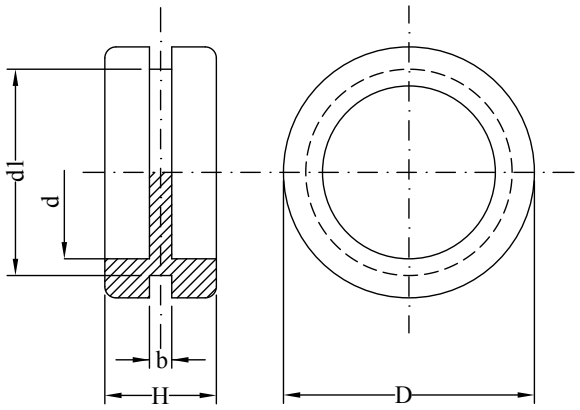

Code NE	d1	b	d	D	H	Package (pcs)
MFP03150121N8	15	1,5	12	19	8	1.000
MFP03150122N8	15	2,5	12	19	9	1.000
MFP03150123N8	15	3,5	12	19	10	1.000
MFP03185112N8	18,5	2	11	23	8	1.000
MFP03190142N8	19	2,5	14	24	7	1.000
MFP03205132N8	20,5	2	13,5	24	7,5	1.000
MFP03210162N8	21	2	16	28	8	1.000
MFP03210163N8	21	3	16	28	9	1.000
MFP03210164N8	21	4	16	28	10	1.000
MFP03210172N8	21	2	17,5	28	8	1.000
MFP03350291N8	35	1	29	41	12	1.000
MFP03260212N8	26	2	21	34	8	1.000
MFP03370292N8	37	2	29	45	7	1.000

CABLE GROMMET
with side diaphragm

MATERIAL
PVC (Polyvinyl chloride)

COLOUR
NE Black

SELF-EXTINGUISHING
HB UL 94

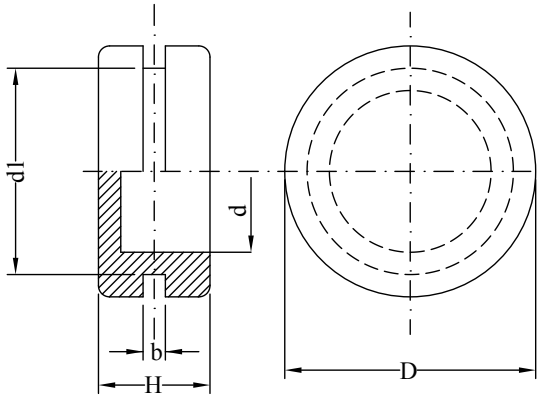

Code NE	d1	b	d	D	H	Package (pcs)
MFP04060032N8	6	2	3	10	6	1.000
MFP04090053N8	9	3	5,5	12	7	1.000
MFP04085062N8	8,5	2,5	6	14	7	1.000
MFP04115103N8	11,5	3	10	14,5	11	1.000
MFP04110081N8	11	1,5	8	15	7,5	1.000
MFP04100081N8	10	1,5	8	15	6	1.000
MFP04110080N8	11	0,5	8	16	6	1.000
MFP04115063N8	11,5	3	6	16	8	1.000
MFP04120061N8	12	1,5	6	17	7	1.000
MFP04120091N8	12	1,5	9	17	7	1.000
MFP04135102N8	13,5	2	10	17,5	7	1.000
MFP04150091N8	15	1,5	9	18,5	8	1.000
MFP04150121N8	15	1,5	12	19	8	1.000
MFP04240152N8	24	2	15,5	32	8,5	1.000
MFP04240153N8	24	3	15,5	32	9,5	1.000
MFP04240154N8	24	4	15,5	32	10,5	1.000
MFP04240172N8	24	2	17,5	32	8,5	1.000
MFP04240173N8	24	3	17,5	32	9,5	1.000
MFP04240174N8	24	4	17,5	32	10,5	1.000
MFP04240192N8	24	2	19,5	32	8,5	1.000
MFP04240193N8	24	3	19,5	32	9,5	1.000
MFP04240194N8	24	4	19,5	32	10,5	1.000

STANDARD
DIN 3016

MATERIAL
W1 (Zinc plated steel + black PVC insulation)

NOTES
Different materials available

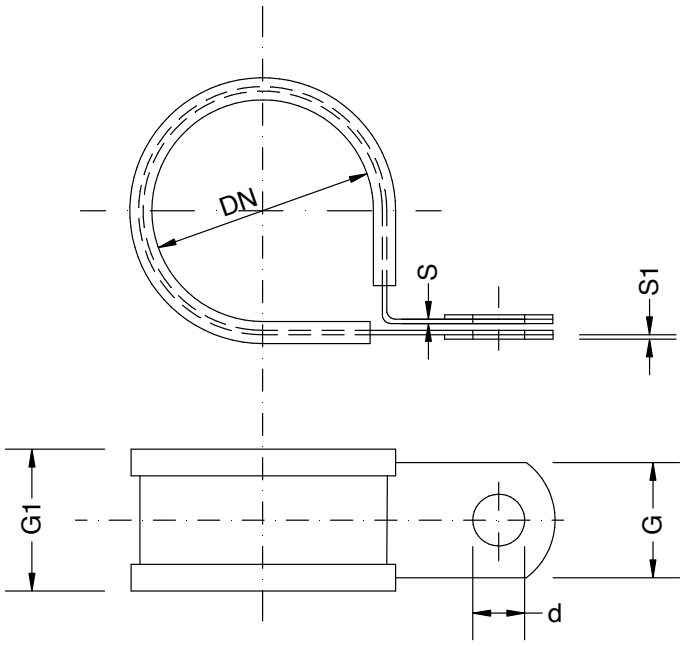

Code W1	DN	G	S	S1	G1	d	Package (pcs)
CLPPK00412000	4	12	0,6	1,6	15	5,3	100
CLPPK00500000	5	15	0,6	1,6	18	6,4	100
CLPPK00612000	6	12	0,6	1,6	15	5,3	100
CLPPK00600000	6	15	0,6	1,6	18	6,4	100
CLPPK00712000	7	12	0,6	1,6	15	5,3	100
CLPPK00812000	8	12	0,6	1,6	15	5,3	100
CLPPK00800000	8	15	0,6	1,6	18	6,4	100
CLPPK01012000	10	12	0,6	1,6	15	5,3	100
CLPPK01000000	10	15	0,6	1,6	18	6,4	100
CLPPK01020000	10	20	0,8	2,5	24	8,4	100
CLPPK01112000	11	12	0,6	1,6	15	5,3	100
CLPPK01100000	11	15	0,6	1,6	18	6,4	100
CLPPK01212000	12	12	0,6	1,6	15	5,3	50
CLPPK01200000	12	15	0,6	1,6	18	6,4	100
CLPPK01220000	12	20	0,8	2,5	24	8,4	100
CLPPK01300000	13	15	0,6	1,6	18	6,4	100
CLPPK01400000	14	15	0,6	1,6	18	6,4	100
CLPPK01420000	14	20	0,8	2,5	24	8,4	100
CLPPK01500000	15	15	0,8	1,8	18	6,4	100
CLPPK01520000	15	20	0,8	2,5	24	8,4	50
CLPPK01600000	16	15	0,8	1,8	18	6,4	100
CLPPK01620000	16	20	0,8	2,5	24	8,4	100
CLPPK01625000	16	25	0,8	2,5	28	10,4	50
CLPPK01700000	17	15	0,8	1,8	18	6,4	100
CLPPK01720000	17	20	0,8	2,5	24	8,4	100
CLPPK01800000	18	15	0,8	1,8	18	6,4	100
CLPPK01820000	18	20	0,8	2,5	24	8,4	50
CLPPK01825000	18	25	0,8	2,5	28	10,4	100
CLPPK01900000	19	15	0,8	1,8	18	6,4	100
CLPPK02012000	20	12	0,6	1,6	15	5,3	50

STANDARD
DIN 3016

MATERIAL
W1 (Zinc plated steel + black PVC insulation)

NOTES
Different materials available

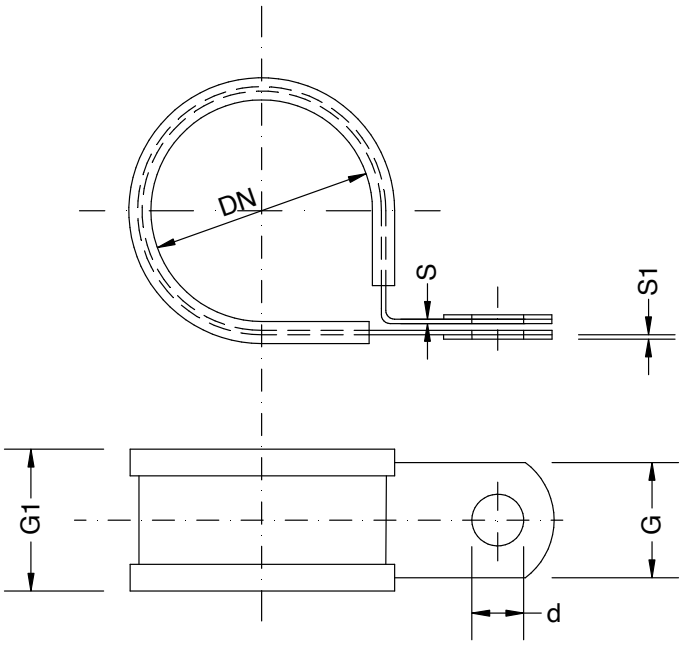

Code W1	DN	G	S	S1	G1	d	Package (pcs)
CLPPK02000000	20	15	0,8	1,8	18	6,4	100
CLPPK02020000	20	20	0,8	2,5	24	8,4	50
CLPPK02100000	21	15	0,8	1,8	18	6,4	100
CLPPK02200000	22	15	0,8	1,8	18	6,4	100
CLPPK02220000	22	20	0,8	2,5	24	8,4	50
CLPPK02300000	23	15	0,8	1,8	18	6,4	100
CLPPK02400000	24	15	0,8	1,8	18	6,4	100
CLPPK02402000	24	20	0,8	2,5	24	8,4	100
CLPPK02425000	24	25	0,8	2,5	28	10,4	100
CLPPK02500000	25	15	0,8	1,8	18	6,4	100
CLPPK02520000	25	20	0,8	2,5	24	8,4	50
CLPPK02525000	25	25	0,8	2,5	28	10,4	100
CLPPK02700000	27	15	0,8	1,8	18	6,4	100
CLPPK02720000	27	20	1	2,5	24	8,4	100
CLPPK02800000	28	15	0,8	1,8	18	6,4	100
CLPPK02820000	28	20	1	2,5	24	8,4	50
CLPPK03000000	30	15	0,8	1,8	18	6,4	100
CLPPK03020000	30	20	1	2,5	24	8,4	50
CLPPK03025000	30	25	1	2,5	28	10,4	100
CLPPK03200000	32	15	0,8	1,8	18	6,4	100
CLPPK03220000	32	20	1	2,5	24	8,4	50
CLPPK03225900	32	25	1	2,5	28	10,4	50
CLPPK03400000	34	15	0,8	1,8	18	6,4	100
CLPPK03500000	35	15	0,8	1,8	18	6,4	100
CLPPK03512000	35	20	1	2,5	24	8,4	50
CLPPK03520000	35	25	1	2,5	28	10,4	50
CLPPK03600000	36	15	0,8	1,8	18	6,4	100
CLPPK03820000	38	20	1	2,5	24	8,4	50
CLPPK04000000	40	15	0,8	1,8	18	6,4	100
CLPPK04020000	40	20	1	2,5	24	8,4	50

STANDARD
DIN 3016

MATERIAL
W1 (Zinc plated steel + black PVC insulation)

NOTES
Different materials available

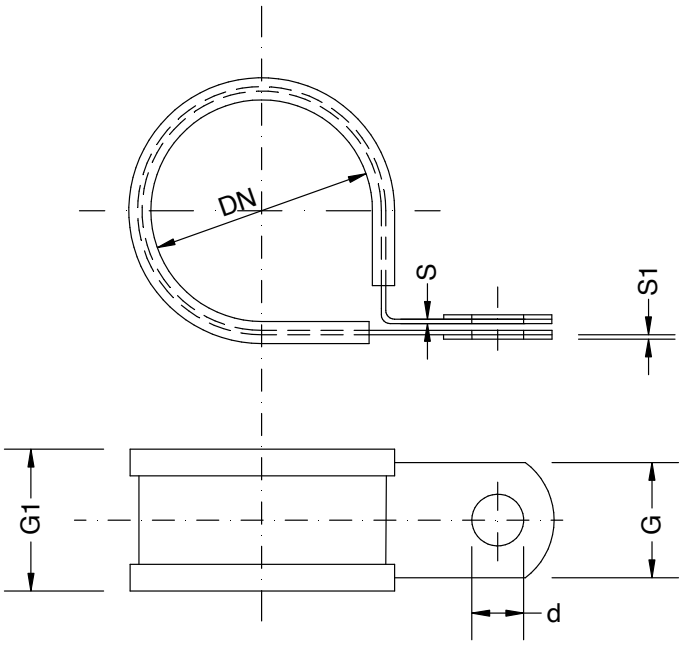

Code W1	DN	G	S	S1	G1	d	Package (pcs)
CLPPK04325000	43	25	1	2,5	28	10,4	50
CLPPK04420000	44	20	1	2,5	24	8,4	50
CLPPK04520000	45	20	1	2,5	24	8,4	50
CLPPK05000000	50	15	0,8	1,8	18	6,4	100
CLPPK05020000	50	20	1	2,5	24	8,4	50
CLPPK05025000	50	25	1	2,5	28	10,4	50
CLPPK05225000	52	25	1	2,5	28	10,4	50
CLPPK05520000	55	20	1	2,5	24	8,4	50
CLPPK05625000	56	25	1	2,5	28	10,4	50
CLPPK06020000	60	20	1	2,5	24	8,4	50
CLPPK06025000	60	25	1	2,5	28	10,4	50
CLPPK06525000	65	25	1	2,5	28	10,4	50
CLPPK07020000	70	20	1	2,5	24	8,4	50
CLPPK09025900	90	20	1	2,5	24	8,4	50
CLPPK09025000	90	25	1	2,5	28	10,4	50
CLPPK11025000	110	25	1	2,5	28	10,4	50

RUBBER INSULATED CABLE CLAMP
standard duty

MATERIAL
W3 (AISI430 Stainless Steel + Black PVC)
W4 (AISI304 Stainless Steel + Black PVC)
W5 (AISI316 Stainless Steel + Black PVC)

NOTES
Other insulation materials available.

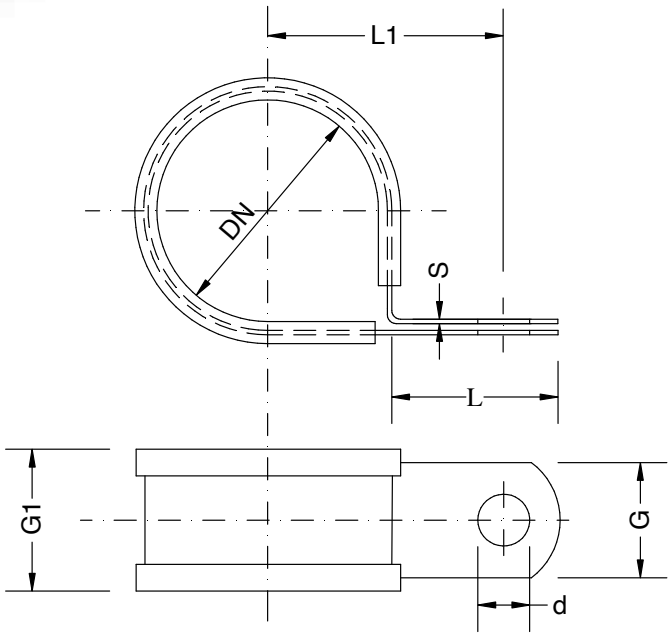

Code W3	Code W4	Code W5	DN (max)	G	S	G1	L	L1 (±1,5)	d	Package (pcs)
CLPPAS0060000	**CLPPAS006SS00**	**CLPPAS006W500**	6	16	0,6	19	20	15	8,5	100
CLPPAS0080000	**CLPPAS008SS00**	**CLPPAS008W500**	8	16	0,6	19	20	16	8,5	100
CLPPAS0100000	**CLPPAS010SS00**	**CLPPAS010W500**	10	16	0,6	19	20	17	8,5	100
CLPPAS0120000	**CLPPAS012SS00**	**CLPPAS012W500**	12	16	0,6	19	20	18	8,5	100
CLPPAS0140000	**CLPPAS014SS00**	**CLPPAS014W500**	14	16	0,6	19	20	19	8,5	100
CLPPAS0160000	**CLPPAS016SS00**	**CLPPAS016W500**	16	16	0,8	19	20	20	8,5	100
CLPPAS0180000	**CLPPAS018SS00**	**CLPPAS018W500**	18	16	0,8	19	20	21	8,5	100
CLPPAS0200000	**CLPPAS020SS00**	**CLPPAS020W500**	20	16	0,8	19	20	22	8,5	100
CLPPAS0202000	**CLPPAS02020SS**	**CLPPAS02020W5**	20	20	1	24	20	26	10,5	50
CLPPAS0220000	**CLPPAS022SS00**	**CLPPAS022W500**	22	16	0,8	19	20	23	8,5	100
CLPPAS0222000	**CLPPAS02220SS**	**CLPPAS02220W5**	22	20	1	24	20	27	10,5	50
CLPPAS0250000	**CLPPAS025SS00**	**CLPPAS025W500**	25	16	0,08	19	20	24,5	8,5	100
CLPPAS0252000	**CLPPAS02520SS**	**CLPPAS02520W5**	25	20	1	24	20	28,5	10,5	50
CLPPAS0252500	**CLPPAS02525SS**	-	25	25	1,2	28	25	28,5	10,5	50
CLPPAS0280000	**CLPPAS028SS00**	**CLPPAS028W500**	28	16	0,8	19	20	26	8,5	100
CLPPAS0282000	**CLPPAS02820SS**	**CLPPAS02820W5**	28	20	1	24	20	30	10,5	50
CLPPAS0282500	-	-	28	25	1,2	28	25	30	10,5	50
CLPPAS0300000	**CLPPAS030SS00**	**CLPPAS030W500**	30	16	0,8	19	20	27	8,5	100
CLPPAS0302000	**CLPPAS03020SS**	**CLPPAS03020W5**	30	20	1	24	20	31	10,5	50
CLPPAS0302500	-	-	30	25	1,2	28	25	31	10,5	50
CLPPAS0320000	**CLPPAS032SS00**	**CLPPAS032W500**	32	16	0,8	19	20	28	8,5	100
CLPPAS0322000	**CLPPAS03220SS**	**CLPPAS03220W5**	32	20	1	24	20	32	10,5	50
CLPPAS0322500	-	-	32	25	1,2	28	25	32	10,5	50
CLPPAS0350000	**CLPPAS035SS00**	**CLPPAS035W500**	35	16	0,8	19	20	29,5	8,5	100
CLPPAS0352000	**CLPPAS03520SS**	**CLPPAS03520W5**	35	20	1	24	20	33,5	10,5	50
CLPPAS0352500	-	-	35	15	1,2	28	25	33,5	10,5	50
CLPPAS0400000	**CLPPAS040SS00**	**CLPPAS040W500**	40	16	0,8	19	20	32	8,5	100
CLPPAS0402000	**CLPPAS04020SS**	**CLPPAS04020W5**	40	20	1	24	20	36	10,5	50

MATERIAL
W3 (AISI430 Stainless Steel + Black PVC)
W4 (AISI304 Stainless Steel + Black PVC)
W5 (AISI316 Stainless Steel + Black PVC)

NOTES
Other insulation materials available.

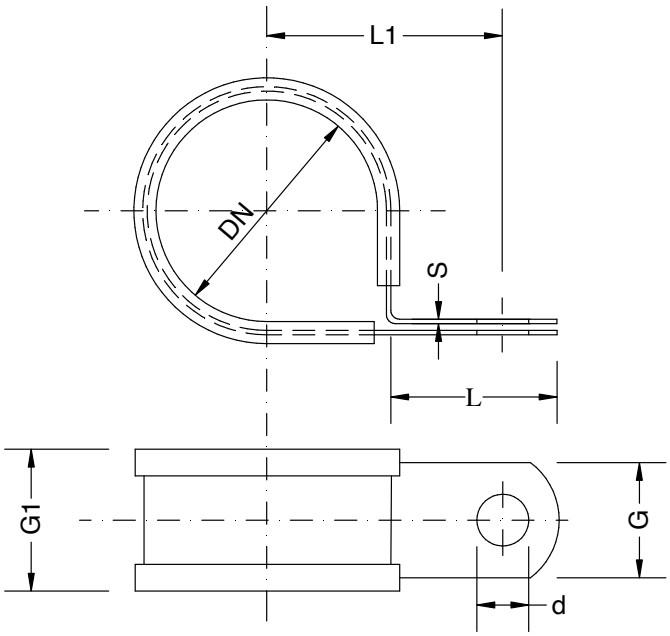

Code W3	Code W4	Code W5	DN (max)	G	S	G1	L	L1 (±1,5)	d	Package (pcs)
CLPPAS0402500	-	-	40	25	1,2	28	25	36	10,5	50
CLPPAS0452000	**CLPPAS04520SS**	**CLPPAS04520W5**	45	20	1	24	20	38,5	10,5	50
CLPPAS0452500	-	-	45	25	1,2	28	25	38,5	10,5	50
CLPPAS0502000	**CLPPAS05020SS**	**CLPPAS05020W5**	50	20	1	24	20	41	10,5	50
CLPPAS0502500	-	-	50	25	1,2	28	25	41	10,5	50
CLPPAS0552000	**CLPPAS05520SS**	**CLPPAS05520W5**	55	20	1	24	20	43,5	10,5	50
CLPPAS0552500	-	-	55	25	1,2	28	25	43,5	10,5	50
CLPPAS0602000	**CLPPAS06020SS**	**CLPPAS06020W5**	60	20	1	24	20	46	10,5	50
CLPPAS0602500	-	-	60	25	1,2	28	25	46	10,5	50
CLPPAS0652000	**CLPPAS06520SS**	**CLPPAS06520W5**	65	20	1	24	20	48,5	10,5	50
-	-	-	65	25	1,2	28	25	48,5	10,5	50
-	**CLPPAS07020SS**	**CLPPAS07020W5**	70	20	1	24	20	51	10,5	50
-	-	-	70	25	1,2	28	25	51	10,5	50
CLPPAS0075000	**CLPPAS07520SS**	**CLPPAS07520W5**	75	20	1	24	20	53,5	10,5	50
-	-	-	75	25	1,2	28	25	53,5	10,5	50
-	**CLPPAS08020SS**	**CLPPAS08020W5**	80	20	1	24	20	56	10,5	50
-	-	-	80	25	1,2	28	25	56	10,5	50
-	**CLPPAS08520SS**	**CLPPAS08520W5**	85	20	1	24	20	58,5	10,5	50
-	-	-	85	25	1,2	28	25	58,5	10,5	50
-	**CLPPAS09020SS**	**CLPPAS09020W5**	90	20	1	24	20	61	10,5	50
-	-	-	90	25	1,2	28	25	61	10,5	50
-	**CLPPAS09520SS**	**CLPPAS09520W5**	95	20	1	24	20	63,5	10,5	50
-	-	-	95	25	1,2	28	25	63,5	10,5	50
-	**CLPPAS10020SS**	**CLPPAS10020W5**	100	20	1	24	20	66	10,5	50
-	-	-	100	25	1,2	28	25	66	10,5	50
-	**CLPPAS11020SS**	**CLPPAS11020W5**	110	20	1	24	20	71	10,5	50
-	-	-	110	25	1,2	28	25	71	10,5	50
-	**CLPPAS12020SS**	**CLPPAS12020W5**	120	20	1	24	20	76	10,5	50

5

PLASTIC PLUGS AND INSERTS

Parallel plugs
page 5.1

Caps for pipes
page 5.12

Threaded caps
page 5.41

Caps for screws, nuts, and bolts
page 5.53

Plugs for holes in sheet metal
page 5.60

Caps and tips
page 5.63

Flange covers
page 5.72

Driveshaft protection plugs
page 5.75

Caps for quick couplings and grease nipples - *page 5.76*

Faston guards
page 5.78

Caps for high temperature applications - *page 5.79*

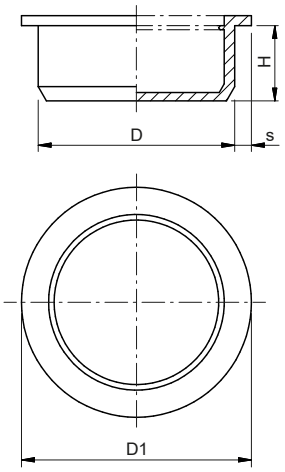

MATERIAL
PE-LD (Low density polyethylene)

COLOUR
(NA) Natural

NOTES
Available in other colours.

Code (NA)	D	D1	H	s	Use		Package (pcs)
					GAS	Flanges	
BP01200002000	2	6,5	3	2,25	-	-	5.000
BP01200002500	2,5	6,5	3,5	2	-	-	5.000
BP01200003000	3	6,5	4,5	1,75	-	-	5.000
BP01200003500	3,5	7	4,5	1,75	-	-	5.000
BP01200004000	4	7,5	5	1,75	-	-	5.000
BP01200004500	4,5	8	5	1,75	-	-	5.000
BP01200005000	5	9	6	2	-	-	5.000
BP01200005500	5,5	9	6	1,75	-	-	5.000
BP01200006000	6	9,5	6	1,75	-	-	5.000
BP01200006500	6,5	10	7	1,75	-	-	5.000
BP01200007000	7	10	6	1,5	-	-	5.000
BP01200007500	7,5	10,5	6,5	1,5	-	-	5.000
BP01200008000	8	11	7	1,5	-	-	5.000
BP01200008500	8,5	11,5	7,5	1,5	-	-	5.000
BP01200009000	9	11,5	7,5	1,5	1/8"	-	5.000
BP01200009500	9,5	12,5	7,5	1,5	-	-	5.000
BP01200010000	10	13	8,5	1,5	-	-	5.000
BP01200010500	10,5	13,5	8,5	1,5	-	DN10	5.000
BP01200011000	11	14,5	8,5	1,75	-	-	5.000
BP01200011500	11,5	14,5	8,5	1,5	-	-	5.000
BP01200012000	12	14,5	9	1,25	1/4"	-	5.000
BP01200012500	12,5	15,5	9	1,5	-	-	5.000
BP01200013000	13	16,5	9,5	1,75	-	-	5000
BP01200013500	13,5	16,5	9,5	1,5	-	-	5.000
BP01200014000	14	17,5	10	1,75	-	-	5.000
BP01200014500	14,5	17,5	9,5	1,5	-	-	4.750
BP01200015000	15	18	9,5	1,5	-	-	5.000
BP01200015500	15,5	18,5	9,5	1,5	3/8"	DN15	5.000
BP01200016000	16	19,5	10	1,75	-	-	5.000
BP01200016500	16,5	19,5	10,5	1,5	-	-	5.000
BP01200017000	17	20,5	10,5	1,75	-	-	5.000
BP01200017500	17,5	21	10,5	1,75	-	-	5.000
BP01200018000	18	21,5	10,5	1,75	-	-	5.000
BP01200018500	18,5	23	10	2,25	-	-	5.000
BP01200019000	19	22	10	1,5	1/2"	-	5.000
BP01200019500	19,5	23	10,5	1,75	-	-	5.000
BP01200020000	20	23,5	11	1,75	-	-	5.000
BP01200020500	20,5	24,5	10,5	2	-	DN20	4.250
BP01200021000	21	24,5	11	1,75	5/8"	-	4.000
BP01200021500	21,5	25,5	11	2	-	-	3.750
BP01200022000	22	25,5	11	1,75	-	-	3.750
BP01200022500	22,5	26	10,5	1,75	-	-	3.250

MATERIAL
PE-LD (Low density polyethylene)

COLOUR
(NA) Natural

NOTES
Available in other colours.

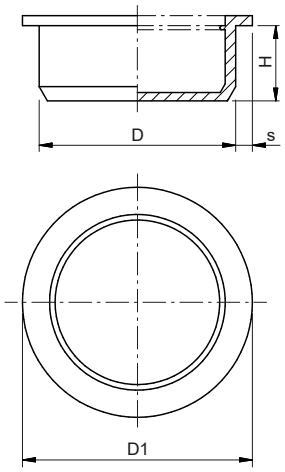

Code (NA)	D	D1	H	s	Use		Package (pcs)
					GAS	Flanges	
BP01200023000	23	27	10,5	2	-	-	3.250
BP01200023500	23,5	27,5	10,5	2	-	-	3.000
BP01200024000	24	28	11,5	2	-	-	3.000
BP01200024500	24,5	28	10,5	1,75	3/4"	-	2.500
BP01200025000	25	30	11	2,5	3/4"	-	2.500
BP01200025500	25,5	29	10,5	1,75	-	DN25	2.500
BP01200026000	26	30,5	10,5	2,25	-	-	2.500
BP01200026500	26,5	30	10,5	1,75	-	-	2.500
BP01200027000	27	31	9,5	2	-	-	2.500
BP01200027500	27,5	31	10,5	1,75	-	-	2.500
BP01200028000	28	32,5	10,5	2,25	-	-	2.500
BP01200028500	28,5	32	10	1,75	7/8"	-	2.500
BP01200029000	29	32	9,5	1,5	-	-	2.500
BP01200029500	29,5	33	10,5	1,75	-	-	1.800
BP01200030000	30	33	10	1,5	-	-	2.500
BP01200030500	30,5	34	10	1,75	-	-	2.000
BP01200031000	31	36	10,5	2,5	1"	-	2.000
BP01200031500	31,5	35	10	1,75	-	-	2.000
BP01200032000	32	37	10,5	2,5	-	-	1.875
BP01200032500	32,5	37,5	10,5	2,5	-	DN32	1.750
BP01200033000	33	38	10,5	2,5	-	-	1.750
BP01200033500	33,5	37,5	10,5	2	-	-	1.500
BP01200034000	34	38,5	10,5	2,25	-	-	1.500
BP01200034500	34,5	38	10,5	1,75	-	-	1.500
BP01200035000	35	40	10,5	2,5	-	-	1.500
BP01200035500	35,5	39	10,5	1,75	-	-	1.375
BP01200036000	36	41	11	2,5	-	-	1.250
BP01200036500	36,5	40	10,5	1,75	-	-	1.250
BP01200037000	37	42	11	2,5	-	-	1.250
BP01200037500	37,5	41,5	10,5	2	-	-	1.250
BP01200038000	38	43	10,5	2,5	-	-	1.250
BP01200038500	38,5	42	10,5	1,75	-	-	1.250
BP01200039000	39	44	10,5	2,5	-	-	1.250
BP01200039500	39,5	43,3	10,7	1,9	1.1/4"	-	1.250
BP01200040000	40	45	10,5	2,5	-	-	1.250
BP01200041000	41	46	10,5	2,5	-	DN40	1.250
BP01200042000	42	47	2,5	10	-	-	1.500
BP01200043000	43	47,8	10,7	2,4	-	-	1.500
BP01200044000	44	49	10,5	2,5	-	-	2.000
BP01200045000	45	50,8	10,6	2,9	-	-	2.000
BP01200046000	46	50,8	10	2,4	1.1/2"	-	2.000
BP01200047000	47	51,5	10,5	2,25	-	-	2.000

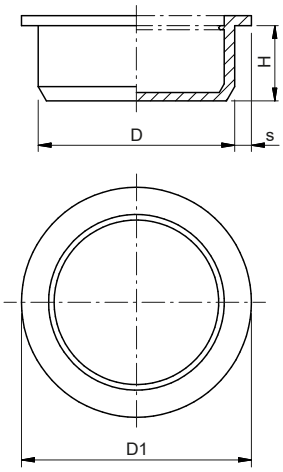

MATERIAL
PE-LD (Low density polyethylene)

COLOUR
(NA) Natural

NOTES
Available in other colours.

Code (NA)	D	D1	H	s	Use		Package (pcs)
					GAS	Flanges	
BP01200048000	48	53	10,5	2,5	-	-	1.750
BP01200048500	48,5	52	10,5	1,75	-	-	1.750
BP01200049000	49	54,5	11	2,25	-	-	1.750
BP01200050000	50	54	10	2	-	DN50	1.750
BP01200051000	51	56	11	2,5	-	-	1.750
BP01200052000	52	57,5	11	2,75	-	-	1.500
BP01200053000	53	59	11	3	-	-	1.500
BP01200053500	53,5	55,5	9,5	1	-	-	1.250
BP01200054000	54	61	11	3,5	-	-	1.250
BP01200055000	55	61	10	3	-	-	1.250
BP01200056000	56	63	11,5	3,5	-	-	1.000
BP01200056500	56,5	59,5	10,5	1,5	-	-	1.250
BP01200057000	57	61	10	2	2"	-	1.250
BP01200058000	58	65	11	3,5	2"	-	1.000
BP01200059000	59	65	11	3	-	-	1.000
BP01200060000	60	65	11	2,5	-	-	1.000
BP01200061000	61	67,5	11	3,25	-	-	1.000
BP01200062000	62	68	11	3	-	-	1.000
BP01200063000	63	67	9,5	2	-	-	1.000
BP01200063500	63,5	70	10,5	3,25	-	-	1.000
BP01200064000	64	67,5	9,5	1,75	-	-	1.000
BP01200065000	65	69	10	2	-	DN65	1.000
BP01200066000	66	72	10	3	-	-	1.000
BP01200067000	67	73	10	3	-	-	1.000
BP01200068000	68	75	11	4	-	-	900
BP01200069000	69	75	10,5	3	-	-	900
BP01200070000	70	74	11	2	-	-	900
BP01200071000	71	74,5	11	1,75	-	-	850
BP01200071500	71,5	74,5	10,5	1,5	-	-	850
BP01200072000	72	79	12	3,5	-	-	1.500
BP01200073000	73	76,5	9,5	1,75	-	-	1.500
BP01200074000	74	77,5	10,5	1,75	2.1/2"	-	1.500
BP01200075000	75	79	9,5	2	-	-	1.500
BP01200076000	76	80	10,5	2	-	-	1.500
BP01200077000	77	81	9,5	2	-	-	1.500
BP01200078000	78	82	10,5	2	-	-	1.500
BP01200079000	79	83	9,6	2	-	-	1.500
BP01200080000	80	84	9,5	2	-	DN80	1.500
BP01200081000	81	85	9,5	2	-	-	1.500
BP01200082000	82	85,5	9,5	1,75	-	-	1.500
BP01200083000	83	86,5	9,5	1,75	-	-	1.500
BP01200084000	84	90	10	2	-	-	1.300

MATERIAL
PE-LD (Low density polyethylene)

COLOUR
(NA) Natural

NOTES
Available in other colours.

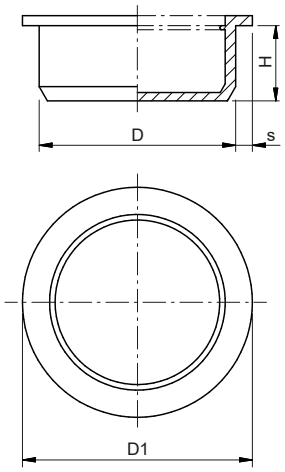

Code (NA)	D	D1	H	s	Use		Package (pcs)
					GAS	Flanges	
BP01200084500	84,5	90	8	2,75	-	-	1.300
BP01200085000	85	88,5	9,5	1,75	-	-	1.300
BP01200086000	86	90	9,5	2	-	-	1.300
BP01200086500	86,5	89	10	1,25	-	-	1.300
BP01200087000	87	90,5	9,5	1,75	3"	-	1.300
BP01200088000	88	91,5	9,5	1,75	-	-	1.300
BP01200089000	89	92,5	9,5	1,75	-	-	1.250
BP01200090000	90	92,5	10	1,25	-	-	1.300
BP01200091000	91	93	9,5	1	-	-	1.200
BP01200092000	92	94,5	9,5	1,25	-	-	1.200
BP01200093000	93	97	9,5	2	-	-	1.200
BP01200094000	94	97	9,5	1,5	-	-	1.200
BP01200095000	95	97	9	1	-	-	1.000
BP01200096000	96	98	9,5	1	-	-	1.000
BP01200097000	97	99	9,5	1	-	-	1.000
BP01200098000	98	100	10	1	-	-	1.000
BP01200099000	99	102	9,5	1,5	-	-	1.000
BP01200100000	100	104,5	10,5	2,25	-	-	1.000
BP01200101000	101	105	10,5	2	-	-	1.000
BP01200102000	102	106	10	2	-	-	1.000
BP01200103000	103	106	11	1,5	-	-	1.000
BP01200104000	104	106,5	11	1,25	-	-	1.000
BP01200105000	105	108	10,5	1,5	-	-	800
BP01200106000	106	109,5	10,5	1,75	-	-	800
BP01200107000	107	110	10,5	1,5	-	-	800
BP01200108000	108	111,5	10,5	1,75	-	-	800
BP01200110000	110	114	12,5	2	-	-	650
BP01200111000	111	115	12,7	2	4"	-	600
BP01200112000	112	116	10,5	2	4"	-	600
BP01200115000	115	118,5	12	1,75	-	-	600
BP01200117000	117	124	12	1,75	-	-	600
BP01200121000	121	124	12	1,5	-	-	500
BP01200122000	122	128	13	3	-	-	500
BP01200125000	125	130	13,5	2,5	-	-	500
BP01200126000	126	130	13,7	2	-	-	500
BP01200128000	128	132	13,5	2	-	-	500
BP01200130000	130	134	13,5	2	-	-	500
BP01200132000	132	136,5	13	2,25	-	-	450
BP01200135000	135	141	12,5	3	-	-	450
BP01200136000	140	144	12,5	2	-	-	400
BP01200140000	140	144	13,5	2	-	-	400
BP01200142000	142	146	13,5	2	-	-	400

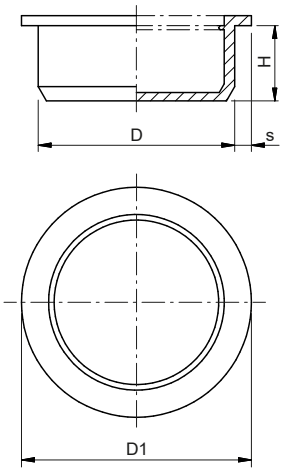

MATERIAL
PE-LD (Low density polyethylene)

COLOUR
(NA) Natural

NOTES
Available in other colours.

Code (NA)	D	D1	H	s	Use		Package (pcs)
					GAS	Flanges	
BP01200146000	146	152	12	3	-	-	400
BP01200150000	150	154	14,5	2	-	-	250
BP01200152000	152	156	15	2	-	-	250
BP01200155000	155	161	12	3	-	-	250
BP01200160000	160	167	14	3,5	-	-	250
BP01200162000	162	169	14	3,5	-	-	250
BP01200165000	165	171	12	3	-	-	250
BP01200167000	167	178	17,5	5,5	-	-	200
BP01200169000	169	175	12	3	-	-	200
BP01200170000	170	175,6	13,6	2,8	-	-	200
BP01200172000	172	177,6	13,6	2,8	-	-	200
BP01200176000	176	182	12	3	-	-	250
BP01200180000	180	187	14,5	3,5	-	-	250
BP01200182000	182	189	14,5	3,5	-	-	250
BP01200184000	184	194	16	5	-	-	200
BP01200186000	186	194	16	4	-	-	200
BP01200190000	190	195,6	13,6	2,8	-	-	200
BP01200192000	192	197,6	13,6	2,8	-	-	200
BP01200200000	200	208	14	4	-	-	200
BP01200202000	202	210	14	4	-	-	200
BP01200204000	204	211	14	4	-	-	150
BP01200208000	208	220	15	6	-	-	100
BP01200211000	211	217	12	3	-	-	200
BP01200214000	214	220	13,5	3	-	-	200
BP01200221000	221	227	12	3	-	-	150
BP01200230000	230	236	12	3	-	-	150
BP01200232000	232	242,6	13,5	5,3	-	-	100
BP01200233000	233	245	16	6	-	-	100
BP01200250000	250	259	14,5	4,5	-	-	120
BP01200252000	252	261	14,5	4,5	-	-	120
BP01200261000	261	273	16	2	-	-	100
BP01200285000	285	298	18	6,5	-	-	100
BP01200302000	302	309,6	18,5	3,8	-	-	80
BP01200311000	311	324	18	6,5	-	-	100
BP01200390000	390	400	19	5	-	-	60

MATERIAL
TPE (Vulcanized Elastomer)

COLOUR
N5 Black RAL 9005

OPERATING TEMPERATURE
135°C max

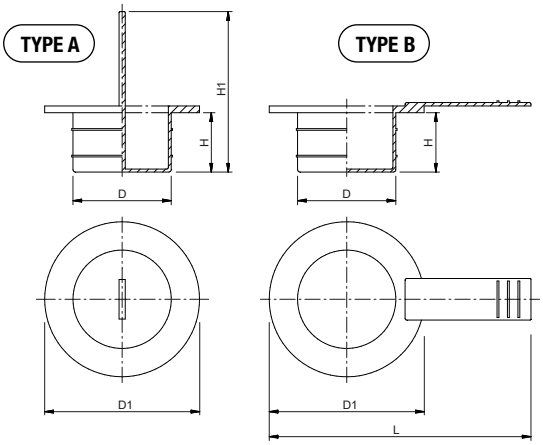

Code N5	Type	D	D1	H	H1	L	Use female thread	Package (pcs)
BP076107500M0	A	7,5	15,5	8	24	-	M8	1.000
BP076109500M0	A	9,5	17,5	8	30	-	M10	8.000
BP076111500M0	A	11,5	19,5	8	30	-	M12	7.000
BP076112800M0	A	12,8	21,5	10	30	-	M14	6.000
BP076115200M0	A	15,2	23,5	10	32	-	M16	4.000
BP076117600M0	A	17,6	25,5	10	26	-	M18	1.000
BP076119400M0	A	19,4	27,5	12	26	-	M20	1.000
BP076121400M0	A	21,4	29,5	12	26	-	M22	1.000
BP076123500M0	A	23,5	28,5	12	26	-	M24	1.000
BP076205500M0	B	5,5	15,5	8	-	23,2	M6	1.000
BP076207500M0	B	7,5	15	8	-	25,3	M8	7.000
BP076209500M0	B	9,5	17	8	-	27,3	M10	7.000
BP076211500M0	B	11,5	17	8	-	28,3	M12	7.000
BP076213000M0	B	13	21	10	-	31	M14	6.000
BP076215500M0	B	15,5	23	10	-	33,3	M16	4.000
BP076217000M0	B	17	26	10	-	35,5	M18	4.000
BP076219400M0	B	19,4	27,5	12	-	37,1	M20	1.000
BP076221400M0	B	21,4	29,5	12	-	39,4	M22	1.000
BP076223500M0	B	23,5	28,5	12	-	40,8	M24	1.000

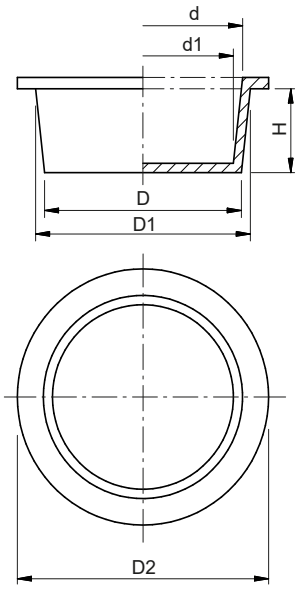

MATERIAL
PE-LD (Low density polyethylene)

COLOUR
R0 Red RAL 3000

NOTES
Available in other colours.

Code R0	D	D1	D2	d	d1	H	Use		Package (pcs)
							Male thread	Female thread	
BP024000290L9	2,9	4,6	7,9	3	1,3	9,5	-	-	2.500
BP024000440L9	4,4	6,1	9,5	4,5	2,8	9,5	M4	M6 - 1/4" UNF	2.500
BP024000470L9	4,7	8,5	11,7	5,7	2,5	22,5	-	-	2.500
BP024000560L9	5,6	7	10,5	5,4	4	8,4	-	-	2500
BP024000620L9	6,2	7,6	11,1	5,9	5	9,5	M5 - M6	M8 - 5/16" UNF	2.500
BP024000770L9	7,7	9,3	12,7	7	5,5	8	1/4" UNF	-	2.500
BP02400077BL9	7,7	9,1	12,7	7,7	6,3	9,5	-	3/8" UNF	2.500
BP024000840L9	8,4	10	13,5	8,2	6,9	9,5	M8 - 5/6" UNF	M10 - 1/8" GAS - 7/16" UNF	2.500
BP024000860L9	8,6	10,3	13,7	8,2	7	9,8	-	-	2.500
BP024000900L9	9	10,7	13,9	8,8	7,5	11,5	-	-	2.500
BP024000940L9	9,4	10,8	14	9,3	7,7	8,5	-	-	2.500
BP024001000L9	10	11,8	15	10	8,5	9,5	M10 - 3/8" UNF	M12	2.500
BP024001060L9	10,6	12,2	15,6	10	8,6	9,8	-	-	2.500
BP024001090L9	10,9	12,3	15,9	10,7	9,1	9,3	1/8" GAS	1/4" GAS - 1/2" UNF	2.500
BP024001120L9	11,2	14	17,5	12,1	9,2	18,5	-	-	2.500
BP024001130L9	11,3	12,9	16,3	10,9	9,4	8,5	-	-	2.500
BP02400113BL9	11,3	13,2	17	11,6	9,8	11	-	-	2.500
BP024001150L9	11,5	13	16,7	11,5	10	9,5	-	M14	2.500
BP024001200L9	12	14,8	17,5	12	10,5	11	-	-	2.500
BP024001210L9	12,1	13,9	17,5	12,3	10,6	11	M12	9/16" UNF	2.500
BP024001250L9	12,5	14	17,5	12	10,5	8,9	7/16" UNF	-	2.500
BP024001280L9	12,8	15,1	18,5	13,2	10,7	23,1	-	-	2000
BP024001360L9	13,6	15,3	19	13,7	12,1	11,2	1/4" GAS - 1/2" UNF	M16 - 5/8" UNF	2.500
BP024001420L9	14,2	16	19	14,4	12,7	12,1	M14 - 9/16" UNF	3/8" GAS	2.500
BP024001470L9	14,7	17	20,6	15,4	13,2	12,7	-	M18	2.500
BP024001490L9	14,9	16,4	21	14,5	13,5	11,5	-	-	2.500
BP024001550L9	15,5	17,1	20,6	15	13,4	8,5	-	-	2.500
BP024001610L9	16,1	17,6	21	15,5	14,5	8,5	-	-	2.500
BP024001640L9	16,4	18,3	22,2	16,9	14,3	12,3	M16 - 5/8" UNF	M20 - 3/4" UNF	2.500
BP024001660L9	16,6	18,5	21,9	16,5	14,5	13	-	-	3.000
BP024001710L9	17,1	19,4	22	17,8	15,5	13	3/8" GAS	M20 x 1,5	1.625
BP024001720L9	17,2	20,2	24,2	18	15,5	18	-	-	2.000
BP024001750L9	17,5	20,1	24	18,5	15,9	14,5	M18 x 1,5 - M18 x 2	1/2" GAS	2.500
BP024001770L9	17,7	19,6	22,2	17,3	15,2	12,7	3/8" GAS	M20	2.500
BP024001780L9	17,8	20	23,8	18,3	16,4	13,4	M18	1/2" GAS	2.500
BP024001830L9	18,3	21,4	25,4	19,3	16,4	17,5	-	-	2.000
BP024001850L9	18,5	20,9	24,6	19,3	17,1	14,3	3/4" UNF	M22	2.500
BP024001900L9	19	21,5	25,8	19,7	17,6	14,3	-	M22 - 7/8" UNF	2.000
BP024001940L9	19,4	22,5	26,5	21,3	18	19	-	-	1.500

MATERIAL
PE-LD (Low density polyethylene)

COLOUR
R0 Red RAL 3000

NOTES
Available in other colours.

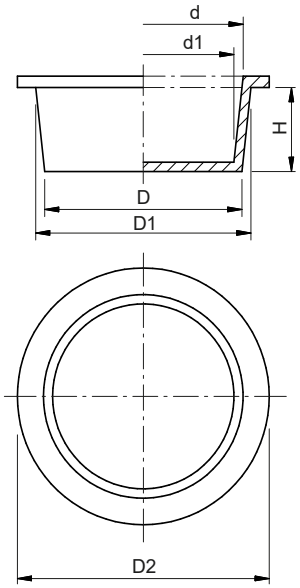

Code R0	D	D1	D2	d	d1	H	Use		Package (pcs)
							Male thread	Female thread	
BP024002050L9	20,5	23,2	27,2	21,2	18,5	17,5	-	-	1.500
BP024002120L9	21,2	23,2	27,3	21,7	19,3	12,3	-	M24	2.000
BP024002130L9	21,3	23,2	27	21,5	19,2	15,9	M20 - 1/2" GAS	5/8" GAS	1.500
BP024002200L9	22	24,8	29	23,2	20,4	17	M22 x 2	-	1.500
BP02400220BL9	22	25	28,5	23	20,5	15,9	M22	1" UNF	1.500
BP024002250L9	22,5	25,5	28,9	23,3	20	17,8	7/8" UNF	-	2.500
BP024002270L9	22,7	24,9	27	22,7	20,8	12			1.500
BP024002340L9	23,4	26,4	29,3	24,4	21,4	17,5	M24 - 5/8" GAS	3/4" GAS M27 - M26	1.250
BP024002400L9	24	26,9	31	25	21,9	18	-	-	1.000
BP024002460L9	24,6	29,5	34	27,5	22,5	27,5	-	-	1.500
BP024002470L9	24,7	27,7	32	26,1	23,2	19	M27 - 1" UNF	1.1/8" UNF	1.000
BP024002520L9	25,2	29,2	33	27,7	23,7	19	-	-	1.500
BP024002660L9	26,6	29,7	31,6	28,3	24,6	26,3	3/4" GAS	7/8" GAS	1.500
BP024002800L9	28	30,9	35,3	29	26,5	19	M27 - M28	M30	1.000
BP024002920L9	29,2	31,2	34,7	30,3	28	12,7	M22 x 2	-	1.000
BP024003000L9	30	32,6	36,7	30,7	27,5	15,2	M30	M33 - 1" GAS	1.000
BP024003050L9	30,5	33,3	37	31,1	28,4	14,5	7/8" GAS	-	1.000
BP024003110L9	31,1	34,3	38,1	32	29,3	17,5	-	1.3/8" UNF	1.500
BP02400311BL9	31,1	34,4	38,1	32,8	29,8	19	1.1/4" UNF	M35	1.500
BP024003160L9	31,6	36,3	40,2	34	29,8	24,1	1.5/16" UNF	-	1.000
BP024003330L9	33,3	34,4	38,1	32,8	31,4	9,5	-	-	1.250
BP02400333BL9	33,3	37,2	41,6	35,6	31,7	22,2	1.1/8" GAS	1.1/2" UNF	1.000
BP024003390L9	33,9	38,3	42,3	36,5	31,9	24,5	-	-	1.000
BP02400339BL9	33,9	37,3	42,2	35,8	32	12,3	1.3/8" UNF	1.5/8" UNF	1.000
BP024003490L9	34,9	36,4	42,7	35,2	33,1	8,2	-	-	1.250
BP024003590L9	35,9	40,2	44,1	37,5	33,2	24,5	-	-	1.000
BP024003630L9	36,3	38,3	42,3	37	34,6	12	-	-	1.500
BP024003690L9	36,9	40,6	44	39	35	22,5	1.1/8" GAS	1.1/4"GAS	1.000
BP024003860L9	38,6	40,6	44,5	39	37,1	12,7	1.1/2" UNF	-	1.500
BP024003960L9	39,6	42,7	47,6	41,1	38,2	18,5	1.3/8" GAS	M42 - M45 - 1.3/8" GAS	1.000
BP024004080L9	40,8	44,7	49	41,8	37,7	24	-	-	500
BP024004140L9	41,4	44,8	49,2	43	39,7	19	1.1/4" GAS		1.000
BP024004250L9	42,5	44,8	50,7	43	40,7	12,6	-	-	1.000
BP024004340L9	43,4	48,5	53,3	47	42	24,5	-	-	600
BP024004410L9	44,1	46,7	49,8	45,7	42,8	18,4	-	-	800
BP024004440L9	44,4	47,7	51	46,1	42,8	19	M45 x 1,5/2/3	1.7/8" UNF - 1.1/2" GAS	1.500
BP024004520L9	45,2	49	53,4	47	43,7	24,5	1.3/8" GAS	1.1/2" GAS	600
BP024004590L9	45,9	46,3	50,8	45	44,3	9,5	-	M48	1.500
BP024004600L9	46	50	54	48	44,3	24,8	-	-	500

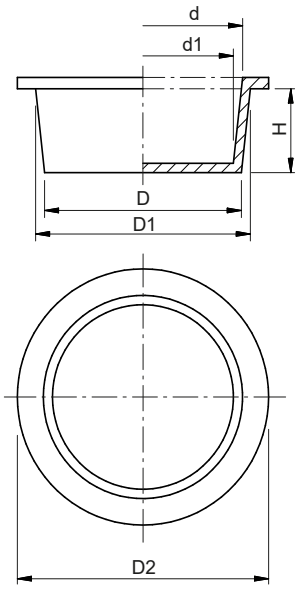

MATERIAL
PE-LD (Low density polyethylene)

COLOUR
R0 Red RAL 3000

NOTES
Available in other colours.

Code R0	D	D1	D2	d	d1	H	Use		Package (pcs)
							Male thread	Female thread	
BP024004720L9	47,2	51,9	55,8	48,7	44,5	24	-	-	500
BP024004750L9	47,5	50,3	54	49	45,2	25	-	-	500
BP024004800L9	48	52,7	57,1	50,7	46,3	25,4	-	-	500
BP024004860L9	48,6	51,2	55,5	48,9	49,7	18,7	1.1/2" GAS	M52	500
BP024004980L9	49,8	54	58	52	47,5	24,3	1.1/2" GAS	M52	500
BP024005110L9	51,1	54,4	57	52	47,7	25	-	-	500
BP024005150L9	51,5	54,1	58,3	52	49,6	18,5	-	-	500
BP024005350L9	53,5	57	62,4	55,3	51,2	25,1	1.3/4" GAS	M56 - M55	400
BP024005400L9	54	58,4	62,4	55	50,8	24,5	-	-	400
BP024005500L9	55	61	65	59	52,2	25	-	-	400
BP024005540L9	55,4	58,8	65	57,2	53,7	25,1	M58	M60 - M58 - 2" GAS	400
BP024005750L9	57,5	57,6	63,6	56,1	55,2	12,8			700
BP024005930L9	59,3	67,3	70,3	64,1	56,7	31,7	-	-	300
BP024005960L9	59,6	62,6	66,7	61	57	24,6	M60 - 2" GAS	M62 - M60	300
BP024006200L9	62	66,4	71	64,3	59	28	-	-	300
BP024006330L9	63,3	69,8	73	67,8	61,5	25,4	-	-	400
BP024006450L9	64,5	67,3	70,6	62,1	65,6	15,8	-	-	400
BP024006810L9	68,1	70,9	74,6	69,3	66,3	19	-	-	400
BP024007000L9	70	75,8	79,4	74	68,1	25,4	-	M76 - M75 - 2.1/2" GAS	300
BP024007400L9	74	77	82,5	73,9	71,5	18,7	-	-	300
BP02400740BL9	74	76,8	80	73,4	70	24,4	-	-	600
BP02400768BL9	76,8	82,2	85,7	80,8	74,8	25,4	-	-	500
BP024007710L9	77,1	80,7	85,7	78,2	74,8	19	2.1/2" GAS	-	300
BP024008000L9	80	86,1	89,8	82	77,5	25,1	-	3" GAS	500
BP024008420L9	84,2	90,8	94,5	88,3	80,2	28	3" GAS	-	500
BP024008530L9	85,3	88	92	85,5	82,9	19	-	-	250
BP024008750L9	87,5	93,6	96,7	90,5	84,3	34,3	-	-	250
BP024008810L9	88,1	93,3	96,5	89,9	85,1	28,6	-	-	300
BP024009210L9	92,1	97	100	94	88,3	32	-	-	300
BP024009350L9	93,5	100,3	107,5	97,8	89,9	26,5	-	-	400
BP024009450L9	94,5	100,6	103,6	97	91	34,5	-	-	100
BP024009650L9	96,5	102	110	101	94	31	-	-	200
BP024009800L9	98	102	107,2	98,5	94,8	24,7	-	-	400
BP024009820L9	98,2	103,3	106	99	95	28,8	-	-	300
BP024010190L9	101,9	107,5	109	103	98	28,6	-	-	300
BP024010670L9	106,7	111,7	113,3	107,4	107,4	28,6	-	-	250
BP024010800L9	108	114,1	118,5	111,6	106,4	35,2	-	-	250
BP024010900L9	109	113	123	111	106	27	-	-	175
BP024011000L9	110	115	118,5	109	105	28	-	-	250

MATERIAL
PE-LD (Low density polyethylene)

COLOUR
R0 Red RAL 3000

NOTES
Available in other colours.

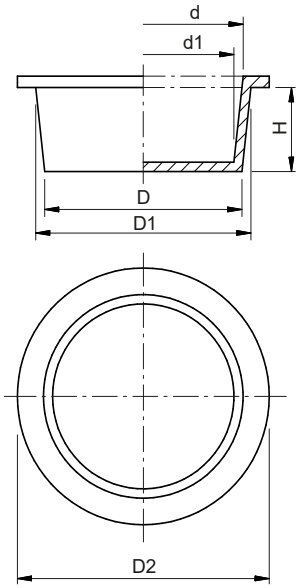

Code R0	D	D1	D2	d	d1	H	Use		Package (pcs)
							Male thread	Female thread	
BP024011150L9	111,5	117,6	122	115	107,5	35	-	-	250
BP024011210L9	112,1	114,3	116,8	109,8	107,5	28,6	-	-	250
BP024012400L9	124	128	134	125	121	23	-	-	150
BP024012900L9	129	135,1	139,5	132	124	36,5	-	-	150
BP024012900L9	133	137	143	134,2	130,2	22	-	-	150
BP024013950L9	139,5	145,6	150	140	135	36,5	-	-	150
BP024014680L9	146,8	151	159,5	148,6	142,8	33	-	-	100
BP024020350L9	203,5	208,5	216	205,9	200,9	24	-	-	120
BP024021600L9	216	223,6	241,5	223	213	29,1	-	-	60

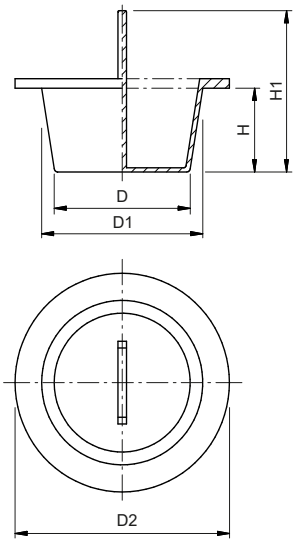

MATERIAL
PE-LD (Low density polyethylene)

COLOUR
R0 Red RAL 3000

NOTES
Available in other colours.

Code R0	D	D1	D2	H	H1	Use female thread			Package (pcs)
						Metric	UNF	GAS/BSP	
BP037062077L9	6,2	7,7	11,1	9,5	20,5	M8	5/16"	-	10.000
BP037068085L9	6,8	8,5	11,9	10,3	15,9	-	-	-	25.000
BP037084100L9	8,4	10	13,5	9,5	20,5	-	7/16"	1/8"	10.000
BP037092109L9	9,2	10,9	15,1	9,5	19,1	-	-	-	14.000
BP037095108L9	9,5	10,8	14	9,5	20,5	-	3/8"	-	10.000
BP037102118L9	10,2	11,8	15,9	9,5	19,1	-	-	-	12.000
BP037109123L9	10,9	12,3	15,9	9,3	20,3	-	1/2"	1/4"	10.000
BP037114130L9	11,4	13	16,7	10,3	14,3	-	-	-	6.000
BP037117137L9	11,7	13,7	17,2	11	22	-	9/16"	-	5.000
BP037127144L9	12,7	14,4	18,3	11,9	20,6	-	-	-	7.500
BP037142160L9	14,2	16	19	11,9	22,9	-	5/8"	3/8"	5.000
BP037147170L9	14,7	17	20,6	13,5	19,1	-	-	-	5.500
BP037155175L9	15,5	17,7	21,3	13,5	19,8	-	-	-	5.000
BP037164183L9	16,4	18,3	22,2	12,3	23,5	-	3/4"	-	5.000
BP037178200L9	17,8	20	23,8	13,7	24,5	-	13/16"	1/2"	5.000
BP037185210L9	18,5	21	25,4	15	21,3	-	-	-	5.000
BP037213232L9	21,3	23,2	27	15,9	26,9	-	7/8"	5/8"	3.000
BP037221247L9	22,1	24,7	28,5	19,1	25,4	-	-	-	4.000
BP037225255L9	22,5	25,5	28,9	17,8	29	-	1"	-	2.500
BP037246277L9	24,6	27,7	31,8	19,8	26,2	-	-	-	2.500
BP037247277L9	24,7	27,7	32	19	30	M28 - M30	1.1/8"	-	2.000
BP037261291L9	26,1	29,1	34	19,1	25,4	-	-	-	2.500
BP037278310L9	27,8	31	35,8	19,8	25,4	-	-	-	2.500
BP037292327L9	29,2	32,7	39,4	19,1	25,4	-	-	-	2.000
BP037328332L9	32,8	33,2	38,1	19,8	25,4	-	-	-	1.800
BP037333372L9	33,3	37,2	41,2	19,1	25,4	-	-	-	1.800
BP037341388L9	34,1	38,8	44,5	22,4	25,4	-	-	-	1.500
BP037369407L9	36,9	40,7	44,5	19,1	25,4	-	-	-	1.500
BP037410441L9	41	44,1	48,4	18,3	28,6	-	-	-	1.000
BP037459492L9	45,9	49,2	54,9	25,4	31,8	-	-	-	1.000
BP037462466L9	46,2	46,6	51,6	12,7	19,1	-	-	-	1.500
BP037482527L9	48,2	52,7	57,1	25,4	26,4	M52	-	-	300
BP037550610L9	55	61	65	25	26	M58 - M60	-	2"	400
BP037593673L9	59,3	67,3	70,6	30,7	31,5	M62	-	-	150
BP037674702L9	67,4	70,2	74,6	25	26	-	-	-	400

MATERIAL
PE-LD (Low density polyethylene)

COLOUR
(NA) Natural

NOTES
Available in other colours and with ventilation hole.
The top can be customized.

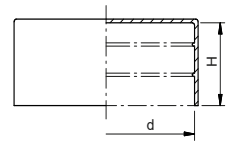

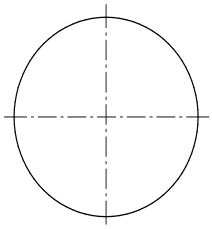

Code (NA)	d	H	Use seat diameter	Package (pcs)
BP10100040000	4	18,8	-	5.000
BP10100050000	5	18,8	-	5.000
BP10100060000	6	18,5	-	5000
BP10100063500	6,35	18,5	-	5.000
BP10100070000	7	18,5	-	5.000
BP10100080000	8	19,8	-	5.000
BP10100096000	9,6	18,8	-	5.000
BP10100100000	10	18,8	1/8"	5.000
BP10100110000	11	19,7	-	5.000
BP10100115000	11,5	19,7	-	5.000
BP10100120000	12	19,6	-	5.000
BP10100127000	12,7	19,9	-	5.000
BP10100130000	13	19,9	-	5.000
BP10100137000	13,7	19,9	1/4"	5.000
BP10100140000	14	16,7	-	5.000
BP10100150000	15	20,1	-	5.000
BP10100155000	15,5	16,7	-	5.000
BP10100160000	16	16,7	-	5.000
BP10100172000	17,2	18	3/8"	5.000
BP10100180000	18	18	-	5.000
BP10100185000	18,5	18	-	5.000
BP10100190000	19	18	-	5.000
BP10100200000	20	21,3	-	5.000
BP10100213000	21,3	20,8	1/2"	5.000
BP10100220000	22	20,8	-	5.000
BP10100232000	23,2	21	-	5.000
BP10100240000	24	21	-	5.000
BP10100260000	26	25	-	5.000
BP10100269000	26,9	25	3/4"	4.000
BP10100285000	28,5	25	-	4.000
BP10100290000	29	25	-	4.000
BP10100300000	30	25,6	-	2.000
BP10100318000	31,8	19,2	-	4.000
BP10100337000	33,7	19,2	1"	4.000
BP10100350000	35	25,6	-	2.500
BP10100365000	36,5	20,6	-	2.500
BP10100380000	38	20,6	-	2.500
BP10100400000	40	25,6	-	2.000
BP10100413000	41,3	20	-	1.000
BP10100424000	42,4	25	1.1/4"	1.000
BP10100445000	44,5	21,2	-	1.000
BP10100454000	45,4	21,2	-	1.000

MATERIAL
PE-LD (Low density polyethylene)

COLOUR
(NA) Natural

NOTES
Available in other colours and with ventilation hole.
The top can be customized.

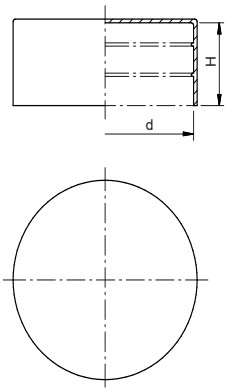

Code (NA)	d	H	Use seat diameter	Package (pcs)
BP10100475000	47,5	25	-	1.000
BP10100483000	48,3	30	1.1/2"	1.000
BP10100510000	51	29,5	-	1.000
BP10100520000	52	30,8	-	1.000
BP10100540000	54	30	1.3/4"	1.000
BP10100550000	55	30	-	1.000
BP10100570000	57	30	-	1.000
BP10100603000	60,3	27,8	2"	1.000
BP10100635000	63,5	28	-	600
BP10100650000	65	28	-	600
BP10100670000	67	35,4	-	600
BP10100700000	70	35,4	-	600
BP10100730000	73	29	-	600
BP10100750000	75	29	-	600
BP10100770000	77	30,5	-	600
BP10100780000	78	30,5	-	500
BP10100800000	80	30,5	-	500
BP10100820000	82	30,5	-	500
BP10100830000	83	30,5	-	500
BP10100850000	85	30,5	-	500
BP10100889000	88,9	35,6	-	400
BP10100900000	90	30	3"	350
BP10100924000	92,4	30	3"	350
BP10100950000	95	39	-	300
BP10100980000	98	31	-	350
BP10101000000	100	31	-	350
BP10101016000	101,6	29,5	3.1/2"	350
BP10101030000	103	41	-	250
BP10101060000	106	41	-	250
BP10101080000	108	38,6	-	250
BP10101100000	110	38,6	-	250
BP10101143000	114,3	40,3	4"	200
BP10101200000	120	39	-	150
BP10101210000	121	39	-	200
BP10101250000	125	39	-	200
BP10101270000	127	36,2	-	200
BP10101300000	130	40	-	150
BP10101330000	133	40	-	125
BP10101360000	136	40	-	150
BP10101380000	138	32,5	-	250
BP10101397000	139,7	40	5"	150
BP10101413000	141,3	40	5"	150

MATERIAL
PE-LD (Low density polyethylene)

COLOUR
(NA) Natural

NOTES
Available in other colours and with ventilation hole.
The top can be customized.

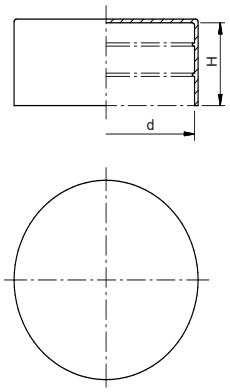

Code (NA)	d	H	Use seat diameter	Package (pcs)
BP10101460000	146	40	-	200
BP10101480000	148	39	-	125
BP10101524000	152,4	39	-	125
BP10101560000	156	40	-	160
BP10101590000	159	49,5	-	200
BP10101600000	160	49,5	-	100
BP10101650000	165	40	-	100
BP10101683000	168,3	39,6	6"	100
BP10101700000	170	45	-	80
BP10101800000	180	50,5	-	80
BP10101850000	185	40	-	75
BP10101900000	190	42	-	75
BP10101937000	193,7	42	-	75
BP10102000000	200	50,7	-	70
BP10102100000	210	40	-	60
BP10102191000	219,1	44,6	8"	60
BP10102250000	225	40,3	-	50
BP10102320000	232	40	-	50
BP10102420000	242	50	-	50
BP10102450000	245	50	-	50
BP10102500000	250	40,3	-	50
BP10102670000	267	43	-	45
BP10102730000	273	51,6	10"	40
BP10102800000	280	61	-	30
BP101032390M0	323,9	49,5	12"	30
BP101035560M0	355,6	56,8	14"	30
BP101036600M0	366	54	-	30
BP101040000M0	400	65	-	10
BP101040640M0	406,4	63,3	16"	10
BP101041900M0	419	58	-	28
BP101045000M0	450	65	-	28
BP101045720M0	457,2	64,5	18"	32
BP101050800M0	508	67,5	20"	26
BP101055880M0	558,8	76	22"	22
BP101060960M0	609,6	63,8	24"	20
BP101066040M0	660,4	105	26"	10
BP101071120M0	711,2	120	28"	20
BP101076200M0	762	120	30"	20
BP101081280M0	812,8	120	32"	18
BP101086360M0	863,6	170	34"	16
BP101091440M0	914,4	150	36"	13
BP101096520M0	965,2	120	38"	8

MATERIAL
PE-LD (Low density polyethylene)

COLOUR
(NA) Natural

NOTES
Available in other colours and with ventilation hole.
The top can be customized.

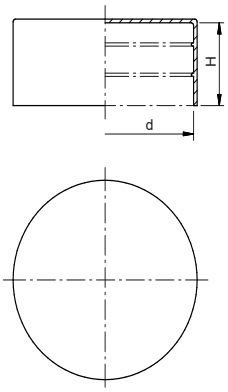

Code (NA)	d	H	Use seat diameter	Package (pcs)
BP101101600M0	1016	180	40"	8
BP101106680M0	1066,8	185	42"	6
BP101111760M0	1117,6	185	44"	6
BP101121920M0	1219,2	200	48"	6
BP101132080M0	1320,8	150	52"	6
BP101137160M0	1371,6	200	54"	6
BP101142240M0	1422,4	215	56"	4
BP101152400M0	1524	220	60"	2
BP101162560M0	1625,6	230	64"	2
BP101182880M0	1828,8	200	72"	2
BP101193040M0	1930,4	200	76"	2
BP101203200M0	2032	200	80"	2
BP101213360M0	2133,6	200	84"	2

MATERIAL
PE-LD (Low density polyethylene)

COLOUR
(NA) Natural

NOTES
Black version available for some dimensions.

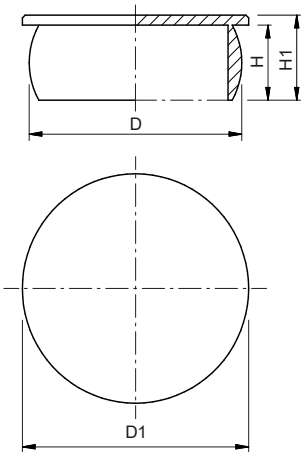

Code (NA)	D	D1	H	H1	Use female thread	Package (pcs)
BP10000210000	2,1	3,3	7	8,7	-	2.000
BP10000260000	2,6	12	4,5	6,3	-	2.000
BP10000270000	2,7	12	6	7,7	-	2.000
BP10000330000	3,3	12	6	7,7	-	2.000
BP10000440000	4,4	9	5,2	6,6	-	2.000
BP10000460000	4,6	7	4,5	5,6	-	2.000
BP10000540000	5,4	12	7,5	9,5	-	10.000
BP10000630000	6,3	9,5	4	5,2	-	5.000
BP10000660000	6,6	7,5	5	7	-	5.000
BP10000730000	7,3	14	6	8,2	M8 x 1	10.000
BP10000840000	8,4	14	6	8	-	10.000
BP10000880000	8,8	11,5	8	9,75	-	5.000
BP10000931200	9,3	12	9	11,4	-	1.000
BP10000931400	9,3	13,8	4,5	6,6	M10	6.000
BP10000931600	9,3	16	5,8	8,3	1/8" GAS	6.000
BP10001001200	10	12	4	5,9	-	5.000
BP10001001500	10	15	9	11	-	5.000
BP10001071400	10,7	14	6	8	M12 x 1,5	6.000
BP10001071500	10,7	15	8,5	11,3	-	6.000
BP10001130000	11,3	14,4	5,7	7,7	M12 x 1,25 - M12 x 1	1.000
BP10001190000	11,9	15,9	7	9,1	M14	5.000
BP10001230000	12,3	16	7,3	9,3	-	5.000
BP10001280000	12,8	20	7,6	10,1	M14 x 1.5	5.000
BP10001400000	14	18,9	8	9,2	-	5.000
BP10001450000	14,5	20	5,5	7,5	-	5.000
BP10001460000	14,6	18,5	9	11,7	-	5.000
BP10001500000	15	18,7	7	9	M16 x 1,5	5.000
BP10001560000	15,6	20	8,3	10,3	-	5.000
BP10001650000	16,5	18,5	6,8	9,2	M18 x 2 - M18 x 1.5 - M18 x 1	5.000
BP10001700000	17	21,7	7,9	10,5	-	5.000
BP10001780000	17,8	24,6	9	12,2	M20 x 2	5.000
BP10001840000	18,4	25	8	10,5	-	5.000
BP10001880000	18,8	21,5	9	12	-	5.000
BP10001930000	19,3	24,7	8,2	10,5	1/2" GAS	5.000
BP10001950000	19,5	24,6	9,3	11,6	M22 x 2	3.000
BP10002052500	20,5	25,2	9	12	-	1.000
BP10002053000	20,5	30	10,7	13,2	M22 x 1,5	3.000
BP10002100000	21	25,5	12,5	15,5	-	3.000
BP10002120000	21,2	25	7,5	9,5	5/8" GAS	5.000
BP10002170000	21,7	25	8	10,5	-	4000
BP10002240000	22,4	27,7	9	12	M24 x 2	4.000
BP10002300000	23	27,4	19,7	21,4	-	1.000

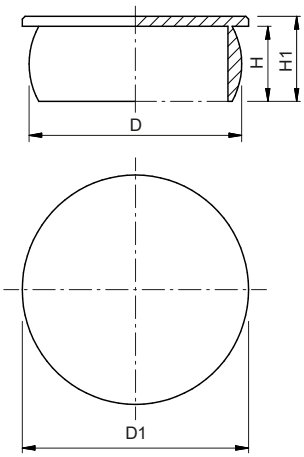

MATERIAL
PE-LD (Low density polyethylene)

COLOUR
(NA) Natural

NOTES
Black version available for some dimensions.

Code (NA)	D	D1	H	H1	Use female thread	Package (pcs)
BP10002340000	23,4	27,6	9	12,2	-	4.000
BP10002400000	24	27	8,8	11,7	-	1.000
BP10002460000	24,6	28	9	12	3/4" GAS	3.000
BP10002480000	24,8	31,5	6	8,4	-	1.000
BP10002500000	25	32	12,7	16		1.000
BP10002550000	25,5	27,7	7,5	9,5	M27 x 1,5	3.000
BP10002650000	26,5	28	9	12,2	M28 x 1,5	4.000
BP10002700000	27	29,8	15	16,7	-	1.000
BP10002750000	27,5	34,4	12	15,3	M30 x 3	1.000
BP10002860000	28,6	34	15	18,6	-	1.000
BP10002900000	29	36	12	15	-	3.000
BP10003050000	30,5	36	12	15	7/8" GAS	2.500
BP10003180000	31,8	36	10	12,5	M33 x 1,5 - 1" GAS	2.000
BP10003260000	32,6	34,8	12	14,7	M33 x 2 - M33 x 1,5 - M36 x 3	1.000
BP10003350000	33,5	36	12	15	M35 x 1,5	2.000
BP10003480000	34,8	41,6	15	18	-	2.000
BP10003550000	35,5	46,5	14,5	18,6	-	1.000
BP10003650000	36,5	41,7	14,6	18,7	-	2.000
BP10003760000	37,6	40,4	12	16	M39 x 3	1.000
BP10003840000	38,4	41,5	15	18	-	2.000
BP10004060000	40,6	43,7	15	18	-	2.000
BP10004200000	42	44,5	16	18	-	1.000
BP10004230000	42,3	47,6	15	18	-	1.000
BP10004330000	43,3	50,5	15	17,7	-	500
BP10004600000	46	54,2	18	24	-	1.500
BP10005050000	50,5	56,3	15,5	19	-	500
BP10005150000	51,5	55	18	21	1.3/4" GAS	1.500
BP10005250000	52,5	59,5	14	16		500
BP10005410000	54,1	58,7	17,5	21	M56 x 4 - M56 x 3 - M56 x 2	500
BP10005530000	55,3	59,2	19,5	22	-	500
BP10005800000	58	64	18	21	2" GAS	1.500
BP10005960000	59,6	74	18	21	-	500
BP10007000000	70	78	18	21,5	M72 x 2	500
BP10007370000	73,5	82,3	17,4	20,5	M75 x 1,5	500
BP10008080000	80,8	93	17,4	20,5	M80 x 4	500
BP10008500000	85	94	18	20	-	100
BP10008650000	86,5	99,3	17,4	20,4	M76 x 2	250
BP10009880000	98,8	112	16,6	17,2	M100 x 2	100
BP10011050000	110,5	130	18	20	-	100
BP10011170000	111,7	123	16,5	20	M115 x 4	250

MATERIAL
PE-LD (Low density polyethylene)

COLOUR
N5 Black RAL 9005

NOTES
Available in other colours.

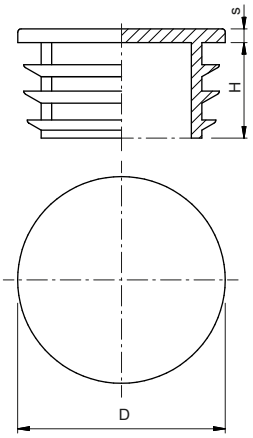

Code N5	D	H	s	Thickness tube	Package (pcs)
BP001010008M0	10	11	3,5	1 ÷ 2	5.000
BP001012008M0	12	11	3,5	1 ÷ 2	2.500
BP001013008M0	13	11	4	1 ÷ 2	2.500
BP001014008M0	14	11,5	5	1 ÷ 2	2.000
BP001015008M0	15	13	3	1 ÷ 2	2.000
BP001016008M0	16	11	5	1 ÷ 2	2.500
BP001018008M0	18	11,5	5	1 ÷ 2	2.000
BP001019008M0	19	11,5	5	1 ÷ 2,5	1.375
BP001020008M0	20	11,5	5	1 ÷ 2,5	1.500
BP001021008M0	21	11,5	5	1 ÷ 2	1.500
BP001022008M0	22	11,5	5	1 ÷ 2	1.500
BP001023008M0	23	11,5	5	1 ÷ 2,5	2.000
BP001024008M0	24	11,5	5	1 ÷ 2,5	1.750
BP001024030M0	24	11,5	5	3 ÷ 3.5	1.750
BP001025008M0	25	11,5	5	1 ÷ 3	1.500
BP001025030M0	25	11,5	5	3,5 ÷ 4	1.750
BP001025412M0	25,4	11,5	5	1,2 ÷ 3,2	1.500
BP001026008M0	26	11,5	5	1 ÷ 3	1.500
BP001027008M0	27	11,5	5	1 ÷ 3	1.375
BP001028008M0	28	11,5	5	1 ÷ 3	1.250
BP001030008M0	30	11,5	5	1 ÷ 2,5	1.000
BP001030025M0	30	11,5	5	2,5 ÷ 4,5	1.250
BP001032010M0	32	12	5	1 ÷ 3	1.000
BP001032025M0	32	11,5	5	2,5 ÷ 5	1.000
BP001032035M0	32	11,5	5	3,5 ÷ 5,5	1.000
BP001034010M0	34	11,5	5	1 ÷ 3	1.000
BP001034035M0	34	11,5	5	3,5 ÷ 4	875
BP001035010M0	35	11,5	5	1 ÷ 3	1.500
BP001035025M0	35	11,5	5	2,5 ÷ 4,5	875
BP001036010M0	36	11,5	5	1 ÷ 3	1.500
BP001037010M0	37	11,5	5	1 ÷ 3	1.500
BP001038010M0	38	11,5	5	1 ÷ 3,5	1.250
BP001038030M0	38	11,5	5	3 ÷ 5	1.500
BP001040010M0	40	11,5	5	1 ÷ 3	1.000
BP001040030M0	40	11,5	5	3 ÷ 5	1.250
BP001042010M0	42	11,5	5	1 ÷ 3	1.000
BP001042030M0	42	11,5	5	3 ÷ 6	1.000
BP001043020M0	43	11,5	5	2 ÷ 2,5	1.000
BP001044512M0	44,5	11,5	5	1,2 ÷ 3,2	1.000
BP001045008M0	45	11	5	1 ÷ 3	1.000
BP001045030M0	45	11,5	5	3 ÷ 5	1.000
BP001046015M0	46	11,5	5	1,5 ÷ 3,5	1.000
BP001048012M0	48	11,5	5	1,2 ÷ 3,6	800
BP001048025M0	48	11,5	5	2,5 ÷ 5	800
BP001050010M0	50	11,5	5	1 ÷ 2,5	500
BP001050025M0	50	11,5	5	2,5 ÷ 4,5	700

Code N5	D	H	s	Thickness tube	Package (pcs)
BP001050812M0	50,8	11,5	5	1,2 ÷ 3	700
BP001052015M0	52	14,5	5	1,5 ÷ 3,5	650
BP001055010M0	55	11,5	5	1 ÷ 3	500
BP001055030M0	55	14,5	5	3 ÷ 5	500
BP001057212M0	57,2	14,5	5	1,2 ÷ 2,7	500
BP001060010M0	60	18,5	5	1,5 ÷ 3	400
BP001060030M0	60	21	5	3 ÷ 5	400
BP001063515M0	63,5	20,5	5	1,5 ÷ 3,5	300
BP001065010M0	65	21	5	1,5 ÷ 3,5	250
BP001065015M0	65	21	5	3 ÷ 5	300
BP001070010M0	70	21	5	1,5 ÷ 3,5	225
BP001075020M0	75	21,5	6	1 ÷ 3,5	250
BP001075030M0	75	21,5	6	3 ÷ 5	200
BP001076015M0	76	21,5	6	1,6 ÷ 4	250
BP001076035M0	76	21,5	6	3,5 ÷ 6	200
BP001080015M0	80	21	4	1,5 ÷ 3	180
BP001080030M0	80	21	4	3 ÷ 5,5	175
BP001082620M0	82,6	21	6	2 ÷ 4,5	150
BP001085015M0	85	21	6	1,5 ÷ 4	300
BP001085035M0	85	21	6	3,5 ÷ 6	150
BP001088015M0	88,9	21,5	6	1,5 ÷ 4	150
BP001088035M0	88,9	21	6	3,5 ÷ 6	150
BP001090015M0	90	20	6	1,5 ÷ 5	150
BP001095015M0	95	21	6	1,5 ÷ 4	125
BP001100020M0	100	28,5	6	2 ÷ 4,5	80
BP001101636M0	101,6	28	6	3,6 ÷ 6	80
BP001102020M0	102	20	5	2 ÷ 4	200
BP001105020M0	105	29	6	2 ÷ 4,5	75
BP001108029M0	108	28	6	3 ÷ 5	75
BP001110020M0	110	28,5	6	2 ÷ 4,5	70
BP001114025M0	114	29	6	2,6 ÷ 5,5	60
BP001120020M0	120	28,5	6	2 ÷ 4	60
BP001125020M0	125	33	6	2 ÷ 6	50
BP001127032M0	127	33	6	3,2 ÷ 7	45
BP001130020M0	130	33	6	2 ÷ 6	40
BP001133020M0	133	33	6	2 ÷ 6	40
BP001140020M0	140	34	6	2 ÷ 6,5	40
BP001150020M0	150	34	6	2 ÷ 7	30
BP001152432M0	152,4	34	6	3,2 ÷ 7,5	30
BP001159020M0	159	34	6	2 ÷ 6,5	30
BP001160025M0	160	34	6	2,5 ÷ 7	30
BP001165032M0	165	34	6	3,2 ÷ 7,5	20
BP001168320M0	168,3	34	6	2 ÷ 6,5	25
BP001177832M0	177,8	34	6	3,2 ÷ 8	20
BP001193729M0	193,7	34	6	2,9 ÷ 8	15

MATERIAL
PE-LD (Low density polyethylene)

COLOUR
N5 Black RAL 9005

NOTES
Available in other colours.

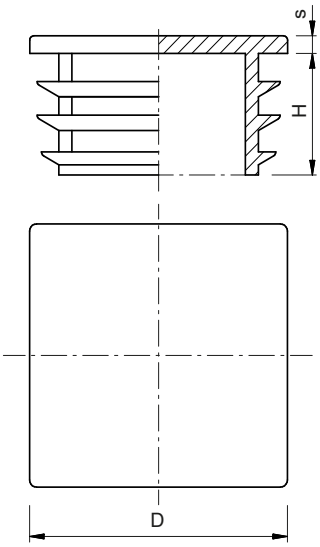

Code N5	D x D	H	s	Thickness tube	Package (pcs)
BP002010008M0	10 x 10	12	4	0,8 ÷ 2,5	2.500
BP002012005M0	12 x 12	12	4	1 ÷ 2	2.500
BP002013005M0	13 x13	12	4	0,5 ÷ 2	2.000
BP002015008M0	15 x15	14	3	1 ÷ 2	2.000
BP002016008M0	16 x 16	11,5	5	1 ÷ 2,5	2.500
BP002018015M0	18 x 18	11,5	5	1,5 ÷ 3	2.500
BP002019012M0	19 x 19	11,5	5	1,2 ÷ 2,9	2.000
BP002020008M0	20 x 20	11,5	5	1 ÷ 3	2.500
BP002022008M0	22 x 22	12	5	1 ÷ 3,5	1.500
BP002025010M0	25 x 25	11,5	5	1 ÷ 3	1.250
BP002025030M0	25 x 25	11,5	5	3 ÷ 3,5	1.250
BP002025040M0	25 x 25	11,5	5	4 ÷ 4,5	1.250
BP002025045M0	25 x 25	11,5	5	5 ÷ 5,5	1.250
BP002025412M0	25,4 x 25,4	11,5	5	1,2 ÷ 3,2	1.250
BP002028010M0	28 x 28	11,5	5	1 ÷ 3	1.000
BP002030010M0	30 x 30	11,5	5	1 ÷ 3	1.000
BP002030025M0	30 x 30	11,5	5	2,5 ÷ 4,5	875
BP002032010M0	32 x 32	11,5	5	1 ÷ 3,5	1.500
BP002034010M0	34 x 34	14,5	5	1 ÷ 3	1.000
BP002035010M0	35 x 35	14,5	5	1 ÷ 3	1.500
BP002035030M0	35 x 35	12	5	2,5 ÷ 5	1.250
BP002038010M0	38 x 38	14,5	5	1 ÷ 3,5	850
BP002040010M0	40 x 40	14,5	5	1 ÷ 3	500
BP002040030M0	40 x 40	14,5	5	3 ÷ 5	800
BP002045010M0	45 x 45	14,5	5	1 ÷ 3	500
BP002045030M0	45 x 45	14,5	5	3 ÷ 5	600
BP002048010M0	48,3 x 48,3	14,5	5	1 ÷ 2,5	500
BP002048025M0	48,3 x 48,3	14,5	5	2,5 ÷ 4,5	500
BP002050010M0	50 x 50	14,5	5	1 ÷ 2,5	500
BP002050026M0	50 x 50	25	6,5	2,6 ÷ 4	450

MATERIAL
PE-LD (Low density polyethylene)

COLOUR
N5 Black RAL 9005

NOTES
Available in other colours.

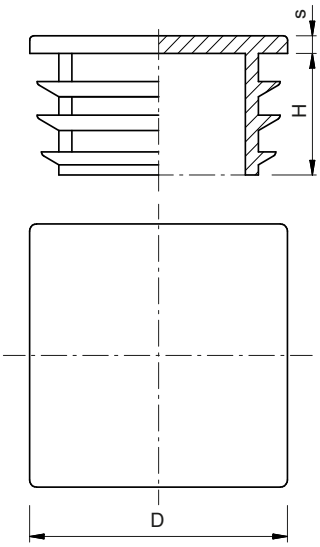

Code N5	D x D	H	s	Thickness tube	Package (pcs)
BP002050035M0	50 x 50	14,5	5	3,5 ÷ 6	500
BP002050812M0	50,9 x 50,9	14,5	5	1,2 ÷ 3,2	500
BP002052015M0	52 x 52	14	5	1,5 ÷ 3,5	450
BP002055020M0	55 x 55	14,5	5	2 ÷ 4,5	400
BP002057215M0	57,3 x 57,3	14,5	4	1,5 ÷ 3	400
BP002060010M0	60 x 60	24	5	1,5 ÷ 3,5	250
BP002060025M0	60 x 60	17,5	6,5	3 ÷ 5	250
BP002063515M0	63,6 x 63,6	21	6	1,5 ÷ 4	225
BP002065010M0	65 x 65	21	5	1 ÷ 3	250
BP002070015M0	70 x 70	19	5	2 ÷ 5	150
BP002070036M0	70 x 70	19,5	8	3,6 ÷ 5	500
BP002075020M0	75 x 75	21	6	2 ÷ 4,5	150
BP002076225M0	76,3 x 76,3	21	6	2,5 ÷ 5	150
BP002080015M0	80 x 80	21	6	1,5 ÷ 4	150
BP002080025M0	80 x 80	24	8	2,5 ÷ 5	150
BP002080040M0	80 x 80	21	6	4 ÷ 7	125
BP002082620M0	82,7 x 82,7	21	6	2 ÷ 4,5	125
BP002088920M0	89 x 89	21	6	2 ÷ 4	100
BP002090030M0	90 x 90	25	6	3 ÷ 5	100
BP002095035M0	95 x 95	21,5	6	3,5 ÷ 5,5	200
BP002100010M0	100 x 100	24	7	1 ÷ 4	100
BP002100050M0	100 x 100	24	7	5 ÷ 8	100
BP002101625M0	101,6 x 101,6	24	6	2,5 ÷ 5,5	80
BP002110030M0	110 x 110	24	6	3 ÷ 5	60
BP002114325M0	114,3 x 114,3	24	6	2,5 ÷ 5,5	60
BP002120025M0	120 x 120	25	5	2,5 ÷ 6	50
BP002125030M0	125 x 125	25	5	3 ÷ 6	60
BP002140040M0	140 x 140	34	6	4 ÷ 7	40

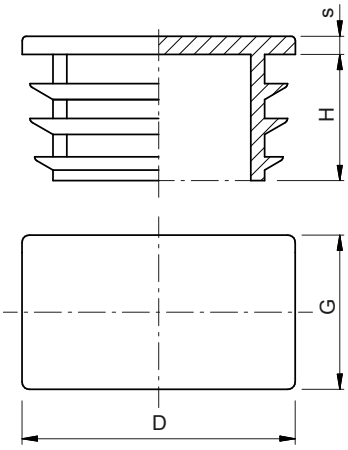

MATERIAL
PE-LD (Low density polyethylene)

COLOUR
N5 Black RAL 9005

NOTES
Available in other colours.

Code N5	D x G	H	s	Thickness tube	Package (pcs)
BP003020100M0	20 x 10	11	3	0,8 ÷ 2	2.500
BP003020151M0	20 x 15	11,5	5	1 ÷ 2	2.500
BP003020160M0	20 x 16	11,5	5	1 ÷ 2	2.500
BP003025100M0	25 x 10	11,5	3	0,8 ÷ 2	2.000
BP003025150M0	25 x 15	11,5	5	1 ÷ 2,5	2.000
BP003025201M0	25 x 20	11,5	5	1 ÷ 3	1.500
BP003030100M0	30 x 10	11,5	5	1 ÷ 2	1.750
BP003030151M0	30 x 15	11,5	5	1 ÷ 2,5	1.500
BP003030201M0	30 x 20	11,5	5	1 ÷ 3	1.250
BP003030250M0	30 x 25	13,5	3,5	1,5 ÷ 1,5	1.000
BP003035100M0	35 x 10	11,5	5	1 ÷ 2	1.375
BP003035151M0	35 x 15	11,5	5	1 ÷ 3	1.000
BP003035200M0	35 x 20	11,5	5	1 ÷ 2,5	1.250
BP003035251M0	35 x 25	11,5	5	1 ÷ 3	875
BP003040101M0	40 x 10	10,5	5	1,5 ÷ 2	1.500
BP003040151M0	40 x 15	12	5	1 ÷ 2	1.000
BP003040200M0	40 x 20	12	5	1 ÷ 3	1.000
BP003040251M0	40 x 25	11,5	5	1 ÷ 3	1.500
BP003040301M0	40 x 30	12	5	1 ÷ 3	1.000
BP003040351M0	40 x 35	12	5	1 ÷ 3	1.000
BP003045151M0	45 x 15	11	5	1,5 ÷ 2	1.000
BP003045201M0	45 x 20	11,5	5	1 ÷ 3	875
BP003045250M0	45 x 25	12	5	1 ÷ 3	1.250
BP003045301M0	45 x 30	12	5	1 ÷ 2,5	1.250
BP003045351M0	45 x 35	12	5	1 ÷ 3,5	1.000
BP003050100M0	50 x 10	12	3,5	1 ÷ 2	1.750
BP003050201M0	50 x 20	14	5	1 ÷ 3	1.000
BP003050251M0	50 x 25	14,5	5	1 ÷ 3	1.000
BP003050253M0	50 x 25	14,5	5	3 ÷ 4,5	1.000
BP003050301M0	50 x 30	13,5	5	1 ÷ 3	1.000
BP003050341M0	50 x 34	14,5	5	1 ÷ 3,5	750
BP003050351M0	50 x 35	14,5	5	1 ÷ 3,5	750
BP003050401M0	50 x 40	12,5	5	1,5 ÷ 3	600
BP003055341M0	55 x 34	14,5	5	1,5 ÷ 4	700
BP003055401M0	55 x 40	14,5	5	1,5 ÷ 4	600
BP003060151M0	60 x 15	14,5	5	1 ÷ 2	1.500
BP003060201M0	60 x 20	14,5	5	1 ÷ 3	1.000
BP003060251M0	60 x 25	14	5	1 ÷ 3	750
BP003060301M0	60 x 30	15	5	1 ÷ 2,5	700
BP003060302M0	60 x 30	14,4	5	2,5 ÷ 4	750
BP003060331M0	60 x 33	14,5	5	1,5 ÷ 3,5	700
BP003060351M0	60 x 35	15	5	1,5 ÷ 3,5	500

MATERIAL
PE-LD (Low density polyethylene)

COLOUR
N5 Black RAL 9005

NOTES
Available in other colours.

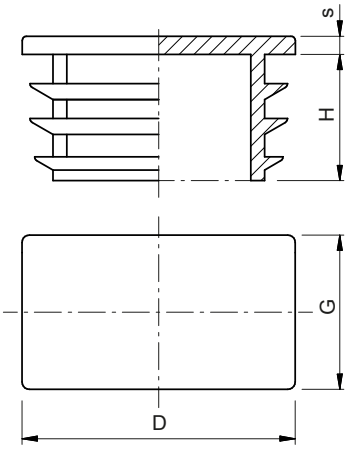

Code N5	D x G	H	s	Thickness tube	Package (pcs)
BP003060401M0	60 x 40	14	5	1 ÷ 3	500
BP003060451M0	60 x 45	15	5	1,5 ÷ 4	450
BP003060501M0	60 x 50	14,5	5	1,5 ÷ 3,5	400
BP003065351M0	65 x 35	15	5	1 ÷ 3	500
BP003070201M0	70 x 20	19	5	1 ÷ 3,5	500
BP003070251M0	70 x 25	18	5	1,5 ÷ 2,5	500
BP003070301M0	70 x 30	18	5	1 ÷ 3	550
BP003070351M0	70 x 35	15	5	1,5 ÷ 3,5	500
BP003070401M0	70 x 40	18	5	1,5 ÷ 3	400
BP003070502M0	70 x 50	15	5	2 ÷ 5	350
BP003075251M0	75 x 25	15	5	1 ÷ 3	600
BP003075502M0	75 x 50	15	5	2 ÷ 4	250
BP003080201M0	80 x 20	18	5	1 ÷ 3	500
BP003080251M0	80 x 25	14,5	5	1 ÷ 3	550
BP003080301M0	80 x 30	14,5	5	1 ÷ 2,5	500
BP003080302M0	80 x 30	14,5	5	2,5 ÷ 4	500
BP003080402M0	80 x 40	14,5	5	1 ÷ 3	250
BP003080403M0	80 x 40	24,5	5	3 ÷ 5	350
BP003080501M0	80 x 50	18	5	1,5 ÷ 4	250
BP003080601M0	80 x 60	24	5	1,5 ÷ 3,5	150
BP003090201M0	90 x 20	14,5	5	1 ÷ 2,5	600
BP003090402M0	90 x 40	15	5	2 ÷ 4	300
BP003090452M0	90 x 45	15	5	2 ÷ 4	250
BP003090502M0	90 x 50	22	6	2 ÷ 4,5	200
BP003090703M0	90 x 70	22	6	3 ÷ 5,5	125
BP003100201M0	100 x 20	15	5	1,5 ÷ 3	500
BP003100251M0	100 x 25	15	5	1,5 ÷ 3	450
BP003100301M0	100 x 30	15	5	1,5 ÷ 3,5	350
BP003100401M0	100 x 40	14,5	5	1,5 ÷ 4	250
BP003100501M0	100 x 50	24	6	1,5 ÷ 4,5	150
BP003100601M0	100 x 60	24	6	1,5 ÷ 4,5	125
BP003100803M0	100 x 80	19	6,5	3 ÷ 5,5	100
BP003110302M0	110 x 30	24	6	2 ÷ 4	325
BP003110603M0	110 x 60	24	6	3,5 ÷ 5,5	125
BP003110703M0	110 x 70	24	6	3 ÷ 5	100
BP003120201M0	120 x 20	21,5	6	1 ÷ 3	450
BP003120251M0	120 x 25	14,5	5	1,5 ÷ 3	350
BP003120301M0	120 x 30	14,5	5	1,5 ÷ 2	300
BP003120403M0	120 x 40	21,5	6	3 ÷ 5	200
BP003120503M0	120 x 50	21,5	6	3 ÷ 5,5	150
BP003120601M0	120 x 60	24,5	5	1,5 ÷ 5	100
BP003120802M0	120 x 80	24	5	2 ÷ 5,5	90

MATERIAL
PE-LD (Low density polyethylene)

COLOUR
N5 Black RAL 9005

NOTES
Available in other colours.

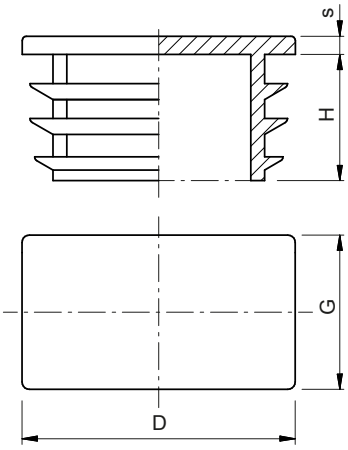

Code N5	D x G	H	s	Thickness tube	Package (pcs)
BP003120805M0	120 x 80	25	7	5 ÷ 8	100
BP003120A03M0	120 x 100	24	6	3,5 ÷ 6	60
BP003125752M0	125 x 75	24,5	6	2 ÷ 5	75
BP003140402M0	140 x 40	21,5	6	2 ÷ 4,5	125
BP003140502M0	140 x 50	21,5	6	2 ÷ 5	100
BP003140602M0	140 x 60	24,5	6	2 ÷ 4,5	100
BP003140702M0	140 x 70	24,5	6	4 ÷ 6,5	80
BP003140802M0	140 x 80	24,5	5	2 ÷ 4,5	70
BP003140A03M0	140 x 100	24,5	6	2 ÷ 4,5	75
BP003150301M0	150 x 30	21,5	6	1,5 ÷ 3	175
BP003150402M0	150 x 40	21,5	6	2 ÷ 4,5	100
BP003150502M0	150 x 50	28	6	2 ÷ 4	100
BP003150504M0	150 x 50	28	6	4 ÷ 6	100
BP003150602M0	150 x 60	21,5	6	2,5 ÷ 5	90
BP003150752M0	150 x 75	21,5	6	2,5 ÷ 5,5	75
BP003150A01M0	150 x 100	27	7	1,5 ÷ 5	70
BP003160502M0	160 x 50	21,5	6	2,5 ÷ 5,5	100
BP003160602M0	160 x 60	21,5	6	2,5 ÷ 5	80
BP003160803M0	160 x 80	24,5	6	3 ÷ 5,5	50
BP003200C06M0	200 x 120	30,5	6	6,3 ÷ 9	30

MATERIAL
PE-LD (Low density polyethylene)

COLOUR
N5 Black RAL 9005

NOTES
Available in other colours.

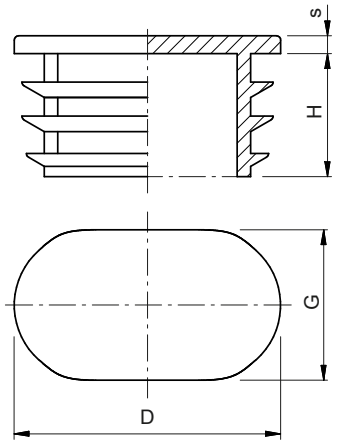

Code N5	D x G	H	s	Thickness tube	Package (pcs)
BP020020102M0	20 x 10	10	5	2 ÷ 2	10.000
BP020030151M0	30 x 15	12	5	1 ÷ 2,5	4.000
BP020035151M0	35 x 15	12	5	1,2 ÷ 2,5	3.000
BP020035201M0	35 x 20	12	5	1,5 ÷ 2	2.500
BP020038201M0	38 x 20	12	5	1 ÷ 3	2.500
BP020040201M0	40 x 20	12	5	1 ÷ 3	2.250
BP020040251M0	40 x 25	11,5	5	1 ÷ 3	2.000
BP020045181M0	45 x 18	11,5	5	1,5 ÷ 3	2.000
BP020045201M0	45 x 20	12	5	1 ÷ 3	1.750
BP020048201M0	48 x 20	12	5	1,5 ÷ 2	1.750
BP020050151M0	50 x 15	12	5	1 ÷ 3	2.250
BP020050201M0	50 x 20	12	5	1 ÷ 3	1.500
BP020050251M0	50 x 25	12	5	1 ÷ 3	1.250
BP020050301M0	50 x 30	12	5	1 ÷ 2,5	1.000
BP020060201M0	60 x 20	13	5	1 ÷ 2	1.000
BP020060251M0	60 x 25	13	5	1 ÷ 2	900
BP020060302M0	60 x 30	13	5	2 ÷ 2	800

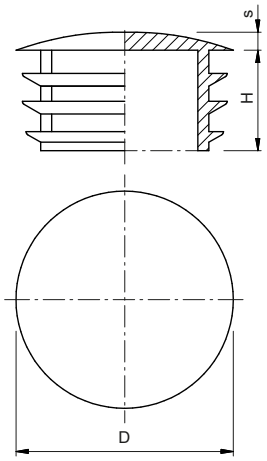

MATERIAL
PE-LD (Low density polyethylene)

COLOUR
N5 Black RAL 9005

NOTES
Available in other colours.

Code N5	D	H	s	Thickness tube	Package (pcs)
BP011010008M0	10	11,5	2	0,8 ÷ 1,5	5.000
BP011012008M0	12	11,5	2	0,8 ÷ 1,5	5.000
BP011013008M0	13	11,5	3	0,8 ÷ 2	2.500
BP011014008M0	14	11,5	3	0,8 ÷ 2	2.500
BP011015008M0	15	11,5	3	0,8 ÷ 2	2.000
BP011016008M0	16	11,5	3	0,8 ÷ 2	2.500
BP011018008M0	18	11,5	3	0,8 ÷ 2	2.000
BP011019008M0	19	11,5	3	0,8 ÷ 2	2.500
BP011020008M0	20	11,5	3	0,8 ÷ 2,5	2.000
BP011021008M0	21	11,5	3	0,8 ÷ 2,5	1.375
BP011022008M0	22	11,5	3	0,8 ÷ 3	1.250
BP011022018M0	22	11,5	3	1,8 ÷ 3,5	1.250
BP011023008M0	23	11,5	3	0,8 ÷ 3	1.500
BP011024010M0	24	11,5	3	0,8 ÷ 2,5	2.000
BP011025010M0	25	11,5	3	1 ÷ 3	1.750
BP011026010M0	26	11,5	3	0,8 ÷ 3	1.750
BP011027010M0	27	11,5	3	0,8 ÷ 3	1.500
BP011028008M0	28	11,5	3	0,8 ÷ 3	1.500
BP011030008M0	30	11,5	3	0,8 ÷ 2,5	1.250
BP011030025M0	30	11,5	3	2,5 ÷ 4,5	1.250
BP011032008M0	32	11,5	3	0,8 ÷ 2,5	1.125
BP011032025M0	32	11,5	3	2,5 ÷ 4,5	1.125
BP011034010M0	34	11,5	3	0,8 ÷ 3	1.000
BP011035010M0	35	11,5	3	1 ÷ 3	875
BP011038010M0	38	11,5	3	1 ÷ 3	1.500
BP011040010M0	40	11,5	3	1 ÷ 3	1.500
BP011042008M0	42	11,5	3	0,8 ÷ 2,5	1.250
BP011044512M0	44,5	11,5	3	1,2 ÷ 2,7	1.000
BP011045010M0	45	11,5	3	1 ÷ 3	1.000
BP011050010M0	50	11,5	3	1 ÷ 2,5	800
BP011055010M0	55	14,5	3	1 ÷ 2,5	600
BP011057212M0	57,2	14,5	3	1,2 ÷ 2,7	500
BP011060015M0	60	18	3	1,5 ÷ 3	400
BP011065015M0	65	14,5	3	1,5 ÷ 3,5	225
BP011070010M0	70	14,5	3	1 ÷ 3	250
BP011076015M0	76	14,5	3	1,5 ÷ 3,5	225
BP011080010M0	80	14,5	3	1 ÷ 3	200
BP011088918M0	88,9	14,5	3	1,8 ÷ 3,5	150

MATERIAL
PE-LD (Low density polyethylene)

COLOUR
N5 Black RAL 9005

NOTES
Available in other colours.

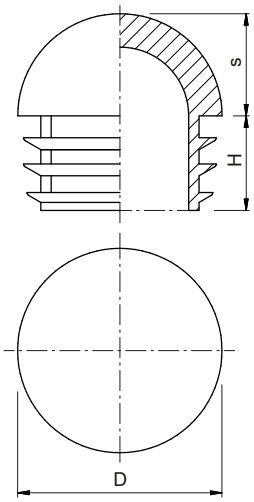

Code N5	D	H	s	Thickness tube	Package (pcs)
BP005016000M0	16	12	7,5	1 ÷ 2	2.000
BP005018000M0	18	12	8	1 ÷ 2	1.375
BP005020000M0	20	15,5	9,5	1 ÷ 2	1.000
BP005022000M0	22	15,5	10,5	1 ÷ 1,5	1.000
BP005025000M0	25	15,5	10,5	1 ÷ 2	1.125
BP005030000M0	30	17,5	13,5	1 ÷ 2	1.250
BP005032000M0	32	19,5	15,5	1 ÷ 2	1.000
BP005035000M0	35	19,5	16,5	1 ÷ 2	800
BP005042000M0	42	30	21	1,5 ÷ 2,5	400
BP005045000M0	45	30	22	1,5 ÷ 2,5	300
BP005048300M0	48,3	30	24,2	1,5 ÷ 2,5	250
BP005050000M0	50	30	25	1,5 ÷ 2,5	250
BP005060000M0	60	40	30	1,5 ÷ 2,5	150

MATERIAL
ABS (Acrylonitrile butadiene styrene)

COLOUR
CR Chrome-plated

NOTES
Available in other colours.

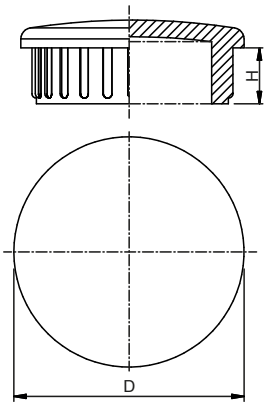

Code CR	D	H	Thickness tube	Package (pcs)
BP017008010J0	8	4,5	1	200
BP017010010J0	10	5	1	200
BP017012010J0	12	5	1	200
BP017013010J0	13	6	1	200
BP017014010J0	14	8	1	200
BP017016010J0	16	8	1	200
BP017016012J0	16	8	1,2	200
BP017016015J0	16	8	1,5	200
BP017018010J0	18	8	1	200
BP017018012J0	18	8	1,2	200
BP017018015J0	18	8	1,5	200
BP017019012J0	19	9	1,2	1000
BP017019015J0	19	9	1,5	1000
BP017020010J0	20	8	1	200
BP017020012J0	20	8	1,2	200
BP017020015J0	20	8	1,5	200
BP017022010J0	22	8	1	200
BP017022012J0	22	8	1,2	200
BP017022015J0	22	8	1,5	200
BP017022020J0	22	8	2	200
BP017025010J0	25	11	1	200
BP017025012J0	25	11	1,2	200
BP017025015J0	25	11	1,5	200
BP017025020J0	25	11	2	200
BP017025025J0	25	11	2,5	200
BP017028010J0	28	10	1	200
BP017028012J0	28	10	1,2	200
BP017028015J0	28	10	1,5	200
BP017028020J0	28	10	2	200
BP017030010J0	30	10	1	200
BP017030012J0	30	10	1,2	200
BP017030015J0	30	10	1,5	200

MATERIAL
ABS (Acrylonitrile butadiene styrene)

COLOUR
CR Chrome-plated

NOTES
Available in other colours.

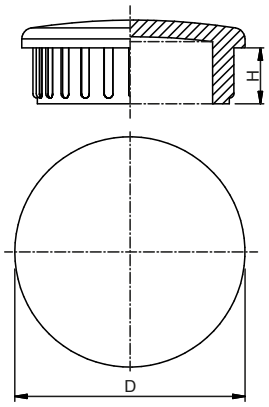

Code CR	D	H	Thickness tube	Package (pcs)
BP017030020J0	30	10	2	200
BP017032012J0	32	10	1,2	200
BP017032015J0	32	10	1,5	200
BP017032020J0	32	10	2	200
BP017032030J0	32	10	3	200
BP017035010J0	35	10	1	200
BP017035012J0	35	10	1,2	200
BP017035015J0	35	10	1,5	200
BP017035020J0	35	10	2	200
BP017038015J0	38	10	1,5	200
BP017038020J0	38	10	2	200
BP017040010J0	40	10	1	100
BP017040015J0	40	10	1,5	100
BP017040020J0	40	10	2	100
BP017045015J0	45	11	1,5	1.000
BP017045020J0	45	11	2	1.000
BP017050010J0	50	11	1	500
BP017050012J0	50	11	1,2	500
BP017050015J0	50	11	1,5	500
BP017050020J0	50	11	2	500
BP017060010J0	60	11	1	100
BP017060012J0	60	11	1,2	100
BP017060015J0	60	11	1,5	100
BP017070012J0	70	11	1,2	200
BP017070015J0	70	11	1,5	200
BP017080012J0	80	11	1,2	200
BP017080015J0	80	11	1,5	200
BP017090012J0	90	11	1,2	200
BP017090015J0	90	11	1,5	200
BP017120050J0	120	11	5	100

ABS CHROME-PLATED INSERT
square

MATERIAL
ABS (Acrylonitrile butadiene styrene)

COLOUR
CR Chrome-plated

NOTES
Available in other colours.

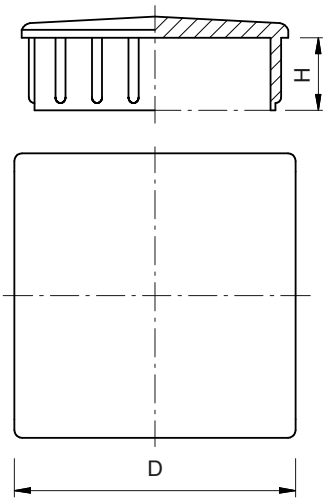

Code CR	D x D	H	Thickness tube	Package (pcs)
BP062012010J0	12 x 12	7	1	200
BP062012012J0	12 x 12	7	1,2	200
BP062015010J0	15 x 15	8,5	1	200
BP062015012J0	15 x 15	8,5	1,2	200
BP062015015J0	15 x 15	8,5	1,5	200
BP062016010J0	16 x 16	8	1	1.000
BP062016015J0	16 x 16	8	1,5	1.000
BP062018012J0	18 x 18	8	1,2	1.000
BP062018015J0	18 x 18	8	1,5	1.000
BP062020010J0	20 x 20	7	1	200
BP062020012J0	20 x 20	7	1,2	200
BP062020015J0	20 x 20	7	1,5	200
BP062025010J0	25 x 25	7	1	200
BP062025012J0	25 x 25	7	1,2	200
BP062025015J0	25 x 25	7	1,5	200
BP062025020J0	25 x 25	7	2	200
BP062030010J0	30 x 30	10	1	100
BP062030012J0	30 x 30	10	1,2	100
BP062030015J0	30 x 30	10	1,5	100
BP062035012J0	35 x 35	11	1,2	1.000
BP062035015J0	35 x 35	11	1,5	1.000
BP062040012J0	40 x 40	11	1,2	1.000
BP062040015J0	40 x 40	11	1,5	1.000
BP062045012J0	45 x 45	11	1,2	600
BP062045015J0	45 x 45	11	1,5	600
BP062050012J0	50 x 50	11	1,2	100
BP062050015J0	50 x 50	11	1,5	100
BP062050020J0	50 x 50	11	2	100
BP062050030J0	50 x 50	11	3	100
BP062060012J0	60 x 60	12	1,2	600
BP062060015J0	60 x 60	12	1,5	600
BP062080012J0	80 x 80	12	1,2	600
BP062080015J0	80 x 80	12	1,5	600
BP062080020J0	80 x 80	12	2	600

MATERIAL
ABS (Acrylonitrile butadiene styrene)

COLOUR
CR Chrome-plated

NOTES
Available in other colours.

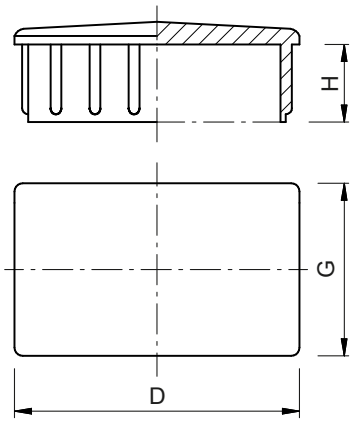

Code CR	D x G	H	Thickness tube	Package (pcs)
BP064150810J0	15 x 8	8	1	1.000
BP064151010J0	15 x 10	9	1	1.000
BP064151012J0	15 x 10	9	1,2	1.000
BP064201010J0	20 x 10	9	1	1.000
BP064201012J0	20 x 10	9	1,2	1.000
BP064201512J0	20 x 15	8	1,2	200
BP064201515J0	20 x 15	8	1,5	200
BP064251015J0	25 x 10	9	1,5	1.000
BP064251515J0	25 x 15	9	1,5	500
BP064301015J0	30 x 10	9	1,5	500
BP064301512J0	30 x 15	9	1,2	500
BP064301515J0	30 x 15	9	1,5	500
BP064302012J0	30 x 20	9	1,2	500
BP064302015J0	30 x 20	9	1,5	500
BP064351515J0	35 x 15	9	1,5	200
BP064352015J0	35 x 20	9	1,5	500
BP064401012J0	40 x 10	8	1,2	500
BP064401015J0	40 x 10	8	1,5	200
BP064401510J0	40 x 15	9	1	500
BP064401512J0	40 x 15	9	1,2	500
BP064401515J0	40 x 15	9	1,5	500
BP064402012J0	40 x 20	9	1,2	100
BP064402015J0	40 x 20	9	1,5	100
BP064402020J0	40 x 20	9	2	500
BP064502012J0	50 x 20	10	1,2	200
BP064502015J0	50 x 20	10	1,5	200
BP064602015J0	60 x 20	10	1,5	100

ABS CHROME-PLATED INSERT
oval

MATERIAL
ABS (Acrylonitrile butadiene styrene)

COLOUR
CR Chrome-plated

NOTES
Available in other colours.

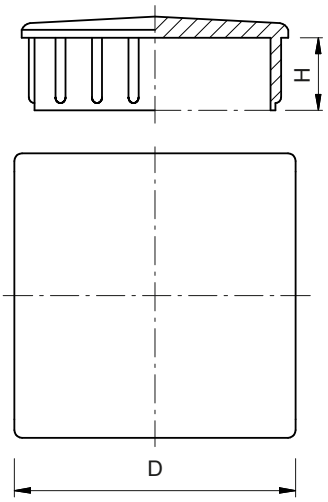

Code CR	D x G	H	Thickness tube	Package (pcs)
BP050201010J0	20 x 10	9	1	1.000
BP050201012J0	20 x 10	9	1,2	1.000
BP050251015J0	25 x 10	9	1,5	1.000
BP050251515J0	25 x 15	9	1,5	1.000
BP050301515J0	30 x 15	10	1,5	1.000
BP050302012J0	30 x 20	10	1,2	1.000
BP050302015J0	30 x 20	10	1,5	1.000
BP050301512J0	30 x 15	10	1,2	1.000
BP050321612J0	32 x 16	10	1,2	1.000
BP050352015J0	35 x 20	10	1,5	1.000
BP050402015J0	40 x 20	10	1,5	1.000
BP050451715J0	45 x 17	10	1,5	1.000

MATERIAL
ABS (Acrylonitrile butadiene styrene)

COLOUR
N5 Black RAL 9005

NOTES
Available in other colours.

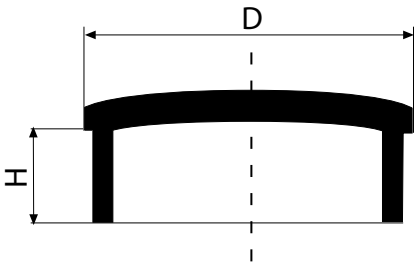

Code N5	D	H	Thickness tube	Package (pcs)
BP036T01010M0	10	5	1	1.000
BP036T01210M0	12	5	1	1.000
BP036T01310M0	13	6	1	1.000
BP036T01410M0	14	8	1	1.000
BP036T01610M0	16	8	1	1.000
BP036T01615M0	16	8	1,5	1.000
BP036T02010M0	20	4,5	1	1.000
BP036T02012M0	20	4,5	1,2	1.000
BP036T02015M0	20	4,5	1,5	1.000
BP036T02210M0	22	8	1	1.000
BP036T02212M0	22	8	1,2	1.000
BP036T02215M0	22	8	1,5	1.000
BP036T02220M0	22	8	2	1.000
BP036T02510M0	25	11	1	1.000
BP036T02512M0	25	11	1,2	1.000
BP036T02515M0	25	11	1,5	1.000
BP036T02520M0	25	11	2	1.000
BP036T02525M0	25	11	2,5	1.000
BP036T02810M0	28	10	1	1.000
BP036T02812M0	28	10	1,2	1.000
BP036T02815M0	28	10	1,5	1.000
BP036T02820M0	28	10	2	1.000
BP036T03010M0	30	10	1	1.000
BP036T03012M0	30	10	1,2	1.000
BP036T03015M0	30	10	1,5	1.000
BP036T03020M0	30	10	2	1.000
BP036T03212M0	32	10	1,2	1.000
BP036T03215M0	32	10	1,5	1.000
BP036T03220M0	32	10	2	1.000
BP036T03230M0	32	10	3	1.000
BP036T03510M0	35	10	1	1.000
BP036T03512M0	35	10	1,2	1.000
BP036T03515M0	35	10	1,5	1.000
BP036T03520M0	35	10	2	1.000
BP036T03815M0	38	10	1,5	1.000
BP036T03820M0	38	10	2	1.000
BP036T04010M0	40	10	1	500
BP036T04015M0	40	10	1,5	500
BP036T04020M0	40	10	2	500
BP036T04520M0	45	11	2	500
BP036T06010M0	60	11	1	500
BP036T06012M0	60	11	1,2	500
BP036T06015M0	60	11	1,5	500

MATERIAL
ABS (Acrylonitrile butadiene styrene)

COLOUR
N5 Black RAL 9005

NOTES
Available in other colours.

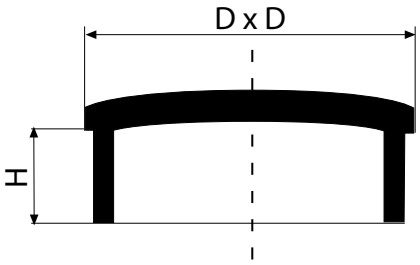

Code N5	D x D	H	Thickness tube	Package (pcs)
BP036Q01210M0	12 x 12	7	1	1.000
BP036Q01212M0	12 x 12	7	1,2	1.000
BP036Q01510M0	15 x 15	8,5	1	1.000
BP036Q01512M0	15 x 15	8,5	1,2	1.000
BP036Q01515M0	15 x 15	8,5	1,5	1.000
BP036Q02010M0	20 x 20	7	1	1.000
BP036Q02012M0	20 x 20	7	1,2	1.000
BP036Q02015M0	20 x 20	7	1,5	1.000
BP036Q02510M0	25 x 25	7	1	1.000
BP036Q02512M0	25 x 25	7	1,2	1.000
BP036Q02515M0	25 x 25	7	1,5	1.000
BP036Q02520M0	25 x 25	7	2	1.000
BP036Q03010M0	30 x 30	10	1	500
BP036Q03012M0	30 x 30	10	1,2	500
BP036Q03015M0	30 x 30	10	1,5	500
BP036Q05012M0	50 x 50	11	1,2	500
BP036Q05015M0	50 x 50	11	1,5	500
BP036Q05020M0	50 x 50	11	2	500
BP036Q05030M0	50 x 50	11	3	500

MATERIAL
ABS (Acrylonitrile butadiene styrene)

COLOUR
N5 Black RAL 9005

NOTES
Available in other colours.

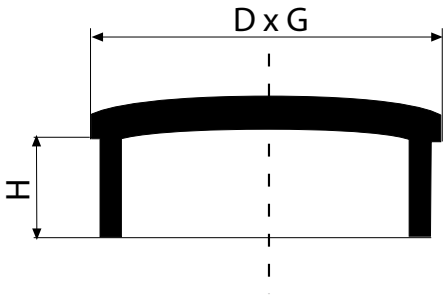

Code N5	D x G	H	Thickness tube	Package (pcs)
BP036201512M0	20 x 15	8	1,2	1.000
BP036201515M0	20 x 15	8	1,5	1.000
BP036351515M0	35 x 15	9	1,5	1.000
BP036401015M0	40 x 10	8	1,5	1.000
BP036402012M0	40 x 20	9	1,2	500
BP036402015M0	40 x 20	9	1,5	500
BP036503015M0	50 x 30	10	1,5	500
BP036602015M0	60 x 20	10	1,5	500
BP036802020M0	80 x 20	10	2	500

RIBBED INSERT WITH ASSEMBLED NUT
round

MATERIAL
Body: PE-HD (High density polyethylene)
Nut: AC (Steel)

COLOUR
N5 Black RAL 9005

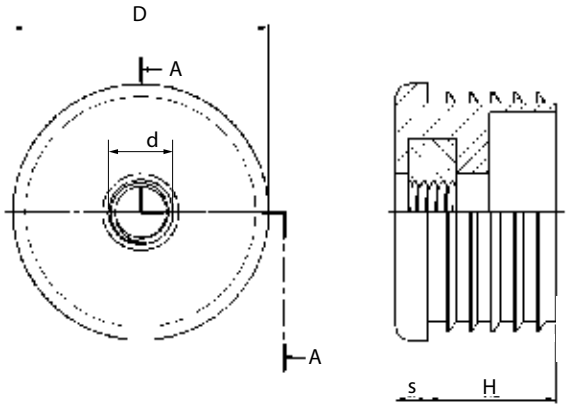

Code N5	D	d	s	H	Thickness tube	Package (pcs)
BP127019006M0	19	M6	5	20	1,0 ÷ 1,5	1.000
BP127020006M0	20	M6	5	20	1,0 ÷ 1,5	1.000
BP127020008M0	20	M8	5	20	1,0 ÷ 1,5	1.000
BP127025006M0	25	M6	5	20	1,0 ÷ 1,5	1.000
BP127025008M0	25	M8	5	20	1,0 ÷ 1,5	1.000
BP127030008M0	30	M8	5	20	1,0 ÷ 1,5	1.000
BP127030010M0	30	M10	5	20	1,0 ÷ 1,5	1.000
BP127032008M0	32	M8	5	20	1,0 ÷ 1,5	1.000
BP127032010M0	32	M10	5	20	1,0 ÷ 1,5	1.000
BP127035008M0	35	M8	5	20	1,0 ÷ 1,5	500
BP127035010M0	35	M10	5	20	1,0 ÷ 1,5	500
BP127038008M0	38	M8	5	20	1,0 ÷ 1,5	500
BP127038010M0	38	M10	5	20	1,0 ÷ 1,5	500
BP127038012M0	38	M12	5	20	1,0 ÷ 1,5	500
BP127040008M0	40	M8	5	20	1,0 ÷ 1,5	250
BP127040010M0	40	M10	5	20	1,0 ÷ 1,5	250
BP127040012M0	40	M12	5	20	1,0 ÷ 1,5	250
BP127050008M0	50	M8	5	20	1,0 ÷ 1,5	250
BP127050010M0	50	M10	5	20	1,0 ÷ 1,5	250
BP127050012M0	50	M12	5	20	1,0 ÷ 1,5	250
BP127060008M0	60	M8	5	20	1,0 ÷ 1,5	250
BP127060010M0	60	M10	5	20	1,0 ÷ 1,5	100
BP127060012M0	60	M12	5	20	1,0 ÷ 1,5	100

MATERIAL
Body: PE-HD (High density polyethylene)
Nut: AC (Steel)

COLOUR
N5 Black RAL 9005

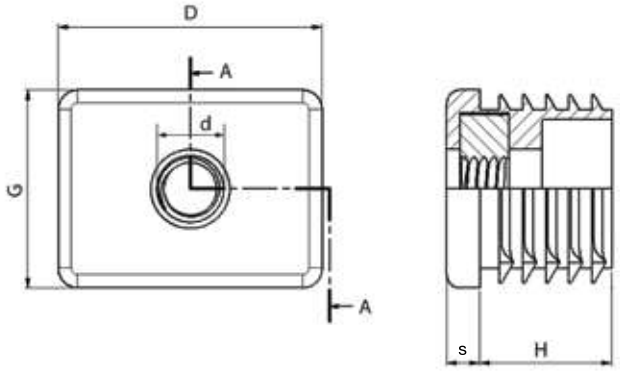

Code N5	D x D	d	s	H	Thickness tube	Package (pcs)
BP120019006M0	19 x 19	M6	5	20	1,0 ÷ 1,5	1.000
BP120020006M0	20 x 20	M6	5	20	1,0 ÷ 1,5	1.000
BP120020008M0	20 x 20	M8	5	20	1,0 ÷ 1,5	1.000
BP120025006M0	25 x 25	M6	5	20	1,0 ÷ 1,5	500
BP120025008M0	25 x 25	M8	5	20	1,0 ÷ 1,5	500
BP120030008M0	30 x 30	M8	5	20	1,0 ÷ 1,5	500
BP120030010M0	30 x 30	M10	5	20	1,0 ÷ 1,5	500
BP120035008M0	35 x 35	M8	5	20	1,0 ÷ 1,5	500
BP120035010M0	35 x 35	M10	5	20	1,0 ÷ 1,5	500
BP120040008M0	40 x 40	M8	5	20	1,0 ÷ 1,5	500
BP120040010M0	40 x 40	M10	5	20	1,0 ÷ 1,5	500
BP120040012M0	40 x 40	M12	5	20	1,0 ÷ 1,5	500
BP120050008M0	50 x 50	M8	5	20	1,0 ÷ 1,5	250
BP120050010M0	50 x 50	M10	5	20	1,0 ÷ 1,5	250
BP120050012M0	50 x 50	M12	5	20	1,0 ÷ 1,5	250

RIBBED INSERT WITH ASSEMBLED NUT
rectangular

MATERIAL
Body: PE-HD (High density polyethylene)
Nut: AC (Steel)

COLOUR
N5 Black RAL 9005

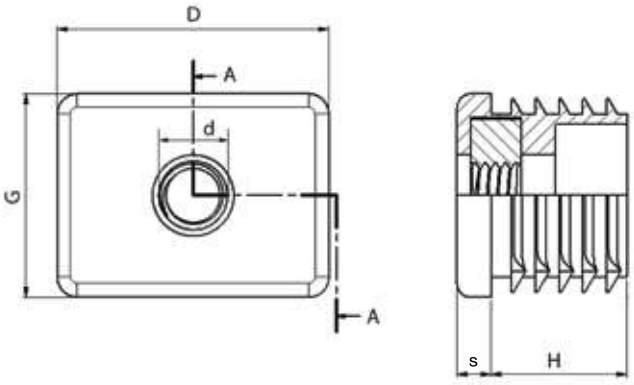

Code N5	D x G	d	s	H	Thickness tube	Package (pcs)
BP123302008M0	30 x 20	M8	5	20	1,0 ÷ 1,5	1.000
BP123302010M0	30 x 20	M10	5	20	1,0 ÷ 1,5	1.000
BP123402008M0	40 x 20	M8	5	20	1,0 ÷ 1,5	500
BP123402010M0	40 x 20	M10	5	20	1,0 ÷ 1,5	500
BP123403008M0	40 x 30	M8	5	20	1,0 ÷ 1,5	500
BP123403010M0	40 x 30	M10	5	20	1,0 ÷ 1,5	500
BP123502508M0	50 x 25	M8	5	20	1,0 ÷ 1,5	500
BP123502510M0	50 x 25	M10	5	20	1,0 ÷ 1,5	500
BP123503008M0	50 x 30	M8	5	20	1,0 ÷ 1,5	500
BP123503010M0	50 x 30	M10	5	20	1,0 ÷ 1,5	500
BP123603008M0	60 x 30	M8	5	20	1,0 ÷ 1,5	250
BP123603010M0	60 x 30	M10	5	20	1,0 ÷ 1,5	250

MATERIAL
Body: PA6-CV30% (Glass-filled polyamide)
Nut: OT58 (Brass) nickel-plated

COLOUR
N5 Black RAL 9005

NOTES
Available with stainless steel nut.

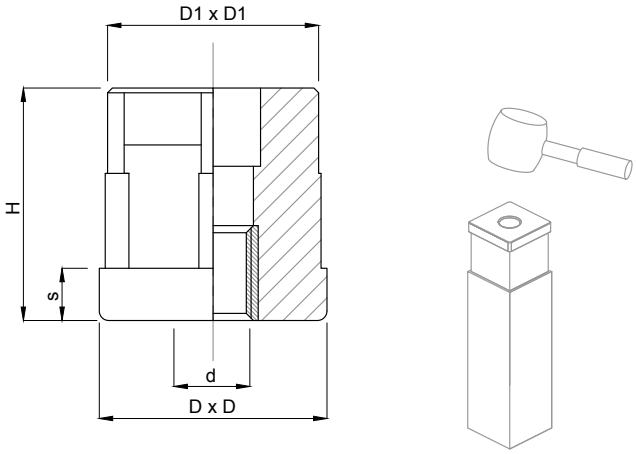

Code N5	D x D	D1 x D1	d	s	H	Thickness tube	Max static load (N)	Package (pcs)
BP121301508M0	30 x 30	27,5 x 27,5	M8	6	33	1,5	5.500	1
BP121301510M0	30 x 30	27,5 x 27,5	M10	6	33	1,5	5.500	1
BP121301512M0	30 x 30	27,5 x 27,5	M12	6	33	1,5	5.500	1
BP121301514M0	30 x 30	27,5 x 27,5	M14	6	33	1,5	5.500	1
BP121301516M0	30 x 30	27,5 x 27,5	M16	6	33	1,5	5.500	1
BP121351508M0	35 x 35	32,5 x 32,5	M8	8	43	1,5	7.000	1
BP121351510M0	35 x 35	32,5 x 32,5	M10	8	43	1,5	7.000	1
BP121351512M0	35 x 35	32,5 x 32,5	M12	8	43	1,5	7.000	1
BP121351514M0	35 x 35	32,5 x 32,5	M14	8	43	1,5	7.000	1
BP121351516M0	35 x 35	32,5 x 32,5	M16	8	43	1,5	7.000	1
BP121401508M0	40 x 40	37,5 x 37,5	M8	8	43	1,5	8.000	1
BP121401510M0	40 x 40	37,5 x 37,5	M10	8	43	1,5	8.000	1
BP121401512M0	40 x 40	37,5 x 37,5	M12	8	43	1,5	8.000	1
BP121401514M0	40 x 40	37,5 x 37,5	M14	8	43	1,5	8.000	1
BP121401516M0	40 x 40	37,5 x 37,5	M16	8	43	1,5	8.000	1
BP121401520M0	40 x 40	37,5 x 37,5	M20	8	43	1,5	8.000	1
BP121402008M0	40 x 40	36,5 x 36,5	M8	8	43	2,0	8.000	1
BP121402010M0	40 x 40	36,5 x 36,5	M10	8	43	2,0	8.000	1
BP121402012M0	40 x 40	36,5 x 36,5	M12	8	43	2,0	8.000	1
BP121402014M0	40 x 40	36,5 x 36,5	M14	8	43	2,0	8.000	1
BP121402016M0	40 x 40	36,5 x 36,5	M16	8	43	2,0	8.000	1
BP121402020M0	40 x 40	36,5 x 36,5	M20	8	43	2,0	8.000	1
BP121501512M0	50 x 50	47,5 x 47,5	M12	10	55	1,5	9.500	1
BP121501514M0	50 x 50	47,5 x 47,5	M14	10	55	1,5	9.500	1
BP121501516M0	50 x 50	47,5 x 47,5	M16	10	55	1,5	9.500	1
BP121501520M0	50 x 50	47,5 x 47,5	M20	10	55	1,5	9.500	1
BP121502012M0	50 x 50	46,5 x 46,5	M12	10	55	2,0	9.500	1
BP121502014M0	50 x 50	46,5 x 46,5	M14	10	55	2,0	9.500	1
BP121502016M0	50 x 50	46,5 x 46,5	M16	10	55	2,0	9.500	1
BP121502020M0	50 x 50	46,5 x 46,5	M20	10	55	2,0	9.500	1
BP121502512M0	50 x 50	45,5 x 45,5	M12	10	55	2,5	9.500	1
BP121502514M0	50 x 50	45,5 x 45,5	M14	10	55	2,5	9.500	1
BP121502516M0	50 x 50	45,5 x 45,5	M16	10	55	2,5	9.500	1
BP121502520M0	50 x 50	45,5 x 45,5	M20	10	55	2,5	9.500	1

INSERT WITH ASSEMBLED NUT - HEAVY LOADS
round

MATERIAL
Body: PA6-CV30% (Glass-filled polyamide)
Nut: OT58 (Brass) nickel-plated

COLOUR
N5 Black RAL 9005

NOTES
Available with stainless steel nut.

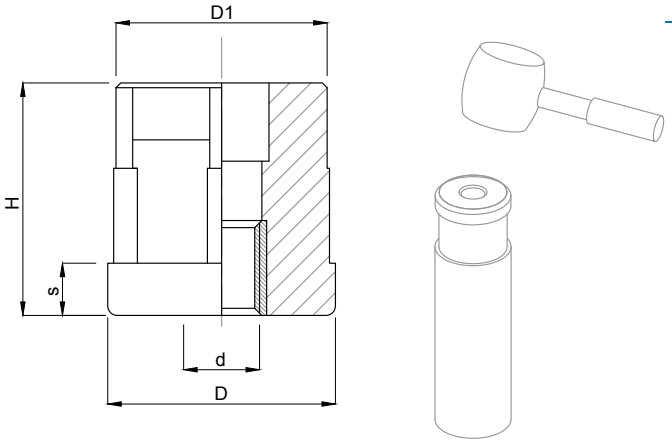

Code N5	D	D1	d	s	H	Thickness tube	Max static load (N)	Package (pcs)
BP128301008M0	30	28,5	M8	6	35	1,0	3.200	1
BP128301010M0	30	28,5	M10	6	35	1,0	3.200	1
BP128301012M0	30	28,5	M12	6	35	1,0	3.200	1
BP128301014M0	30	28,5	M14	6	35	1,0	3.200	1
BP128301016M0	30	28,5	M16	6	35	1,0	3.200	1
BP128381508M0	38	35,5	M8	8	43	1,5	5.500	1
BP128381510M0	38	35,5	M10	8	43	1,5	5.500	1
BP128381512M0	38	35,5	M12	8	43	1,5	5.500	1
BP128381514M0	38	35,5	M14	8	43	1,5	5.500	1
BP128381516M0	38	35,5	M16	8	43	1,5	5.500	1
BP128421508M0	42	39,5	M8	8	42	1,5	6.500	1
BP128421510M0	42	39,5	M10	8	42	1,5	6.500	1
BP128421512M0	42	39,5	M12	8	42	1,5	6.500	1
BP128421514M0	42	39,5	M14	8	42	1,5	6.500	1
BP128421516M0	42	39,5	M16	8	42	1,5	6.500	1
BP128421520M0	42	39,5	M20	8	42	1,5	6.500	1
BP128481508M0	48	45,5	M8	11	49	1,5	8.000	1
BP128481510M0	48	45,5	M10	11	49	1,5	8.000	1
BP128481512M0	48	45,5	M12	11	49	1,5	8.000	1
BP128481514M0	48	45,5	M14	11	49	1,5	8.000	1
BP128481516M0	48	45,5	M16	11	49	1,5	8.000	1
BP128481520M0	48	45,5	M20	11	49	1,5	8.000	1
BP128501508M0	50	47,5	M8	11	49	1,5	8.500	1
BP128501510M0	50	47,5	M10	11	49	1,5	8.500	1
BP128501512M0	50	47,5	M12	11	49	1,5	8.500	1
BP128501514M0	50	47,5	M14	11	49	1,5	8.500	1
BP128501516M0	50	47,5	M16	11	49	1,5	8.500	1
BP128501520M0	50	47,5	M20	11	49	1,5	8.500	1
BP128601514M0	60	57,5	M14	12	50	1,5	10.000	1
BP128601516M0	60	57,5	M16	12	50	1,5	10.000	1
BP128601520M0	60	57,5	M20	12	50	1,5	10.000	1
BP128601524M0	60	57,5	M24	12	50	1,5	10.000	1
BP128602014M0	60	56,5	M14	12	50	2,0	10.000	1
BP128602016M0	60	56,5	M16	12	50	2,0	10.000	1
BP128602020M0	60	56,5	M20	12	50	2,0	10.000	1
BP128602024M0	60	56,5	M24	12	50	2,0	10.000	1
BP128602514M0	60	55,5	M14	12	50	2,5	10.000	1
BP128602516M0	60	55,5	M16	12	50	2,5	10.000	1
BP128602520M0	60	55,5	M20	12	50	2,5	10.000	1
BP128602524M0	60	55,5	M24	12	50	2,5	10.000	1

MATERIAL
PE-LD (Low density polyethylene)

COLOUR
N5 Black RAL 9005

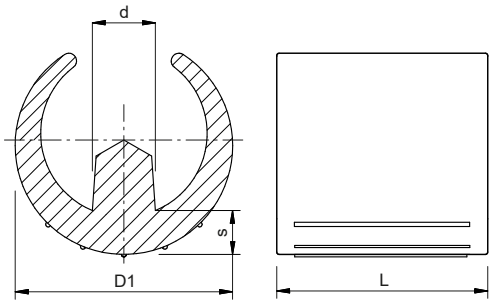

Code N5	D	D1	s	L	Pipe diameter	Package (pcs)
BP032141655M0	5,5	18,5	3,5	18	14 ÷ 16	4.000
BP032161855M0	5,5	20,5	3,5	19	16 ÷ 18	4.000
BP032182055M0	5,5	22	3,5	20	18 ÷ 20	4.000
BP032202255M0	5,5	24,5	4	22	20 ÷ 22	300
BP032242655M0	5,5	28	5	25	24 ÷ 26	300
BP032242675M0	7,5	28,5	5	25	24 ÷ 26	1.500
BP032283075M0	7,5	32	5,5	30	28 ÷ 30	1.000

MATERIAL
Body: PE-HD (High density polyethylene)
O-Ring: NBR (Nitrile rubber) nera Shore 70

COLOUR
G6 Yellow RAL 1016

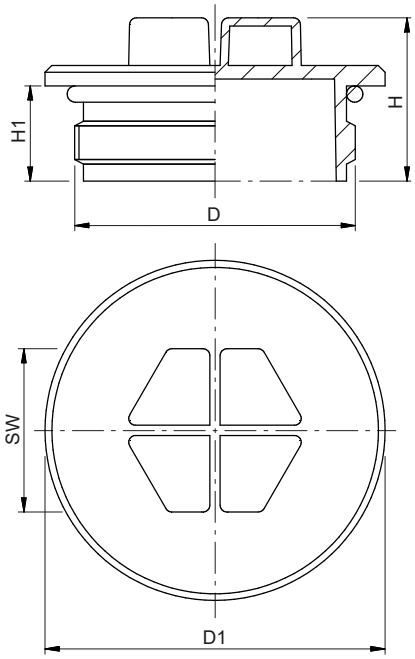

Code G6	Threading	D	D1	H	H1	SW	Package (pcs)
BP086M08100J4	Metric	M8 x 1	12,5	17	10	6	500
BP086M10100J4	Metric	M10 x 1	14,5	17,2	10	7	500
BP086M10150J4	Metric	M10 x 1,5	14,5	17,2	10	7	500
BP086M12100J4	Metric	M12 x 1	17	17,2	10	10	500
BP086M12150J4	Metric	M12 x 1,5	17	19,2	12	10	500
BP086M14150J4	Metric	M14 x 1 ,5	19	19,2	12	10	500
BP086M16150J4	Metric	M16 x 1,5	22	20,4	12	12	500
BP086M18150J4	Metric	M18 x 1,5	24	20,4	12	12	500
BP086M20150J4	Metric	M20 x 1,5	26	20,4	12	15	250
BP086M22150J4	Metric	M22 x 1,5	28	20,4	12	15	250
BP086M24150J4	Metric	M24 x 1,5	30	20,4	12	17	250
BP086M26150J4	Metric	M26 x 1,5	32	20,4	12	19	250
BP086M27200J4	Metric	M27 x 2	33	24	15	19	250
BP086M28150J4	Metric	M28 x 1,5	34	20,4	12	19	250
BP086M30150J4	Metric	M30 x 1,5	38	20	12	22	250
BP086M30200J4	Metric	M30 x 2	38	24	15	22	250
BP086M32150J4	Metric	M32 x 1,5	40	20	12	24	250
BP086M33200J4	Metric	M33 x 2	40	24	15	24	250
BP086M36150J4	Metric	M36 x 1,5	45	20	12	24	250
BP086M36200J4	Metric	M36 x 2	45	24	15	24	100
BP086M38150J4	Metric	M38 x 1,5	48	20,6	12	24	250
BP086M42200J4	Metric	M42 x 2	50	24	15	24	100
BP086M45150J4	Metric	M45 x 1,5	52	22	12	24	100
BP086M45200J4	Metric	M45 x 2	52	25	15	30	100
BP086M48200J4	Metric	M48 x 2	55	25	15	30	100
BP086M52150J4	Metric	M52 x 1,5	60	22	12	30	100
BP086M52200J4	Metric	M52 x 2	60	25	15	7	100
BP086P01800J4	GAS	1/8" - 28	16	17,2	10	7	500
BP086P01400J4	GAS	1/4"- 19	19	19,7	12,5	10	500
BP086P03800J4	GAS	3/8" - 19	22	20,9	12,5	13	500

MATERIAL
Body: PE-HD (High density polyethylene)
O-Ring: NBR (Nitrile rubber) nera Shore 70

COLOUR
G6 Yellow RAL 1016

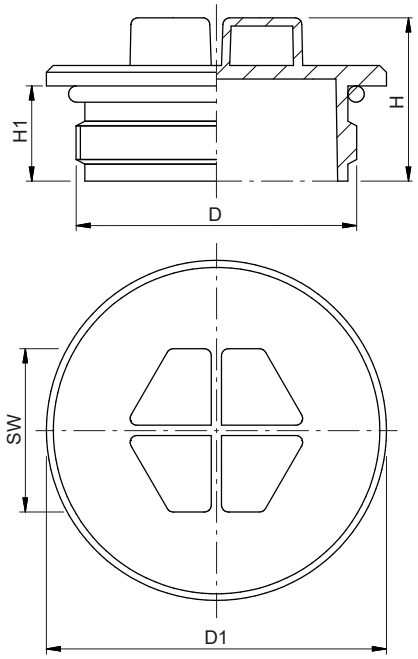

Code G6	Threading	D	D1	H	H1	SW	Package (pcs)
BP086P01200J4	GAS	1/2" - 14	27	21,9	13,5	15	500
BP086P05800J4	GAS	5/8" - 14	29,5	21,9	13,5	17	500
BP086P03400J4	GAS	3/4" - 14	32	21,9	13,5	19	250
BP086P07800J4	GAS	7/8" - 14	37	21,9	13,5	22	250
BP086P10000J4	GAS	1" - 11	40	23,6	15	24	250
BP086P11400J4	GAS	1.1/4"- 11	50	23,6	15	24	250
BP086P11200J4	GAS	1.1/2"-11	56	25	15	30	100
BP086P13400J4	GAS	1.3/4" - 11	62	25	15	36	100
BP086P20000J4	GAS	2" - 11	68	25	15	36	100
BP086F03800J4	UNF	3/8" - 24	14	17,2	10	7	500
BP086F07160J4	UNF	7/16" - 20	16	19,7	12,5	10	500
BP086F01200J4	UNF	1/2" - 20	19	20,9	12,5	10	500
BP086F09160J4	UNF	9/16" - 18	21	20,9	12,5	10	500
BP086F05800J4	UNF	5/8" - 18	22	20,9	12,5	13	500
BP086F03400J4	UNF	3/4" - 16	27	21,9	13,5	13	250
BP086F07800J4	UNF	7/8" - 14	28	21,9	13,5	15	250
BP086F10000J4	UNF	1" - 14	31	22,1	13,5	17	250
BP086F11160J4	UNF	1.1/16" - 12	35	22,6	14	19	250
BP086F13160J4	UNF	1.3/16" - 12	38	22,6	14	22	250
BP086F15160J4	UNF	1.5/16" - 12	42	24	14	24	250
BP086F15800J4	UNF	1.5/8" - 12	50	24	14	24	100
BP086F17800J4	UNF	1.7/8" - 12	55	24	14	30	100

MATERIAL
PE-LD (Low density polyethylene)

COLOUR
G6 Yellow RAL 1016

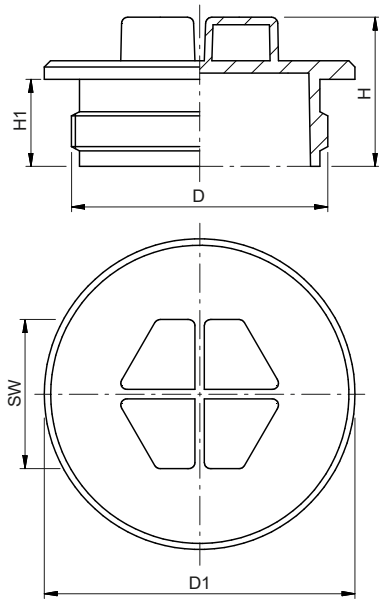

Code G6	Threading	D	D1	H	H1	SW	Package (pcs)
BP084M08100J4	Metric	M8 x 1	12	14	7	10	2.500
BP084M10100J4	Metric	M10 x 1	14	16	9	12	2.500
BP084M12150J4	Metric	M12 x 1	16	16	9	13	2.500
BP084M12150J4	Metric	M12 x 1,5	16	17	9	13	2.500
BP084M14150J4	Metric	M14 x 1	19	17	9	16	2.500
BP084M14150J4	Metric	M14 x 1,5	19	17	9	16	2.500
BP084M16150J4	Metric	M16 x 1,5	21	19	10	18	1.500
BP084M18150J4	Metric	M18 x 1,5	24	19	10	20	1.500
BP084M20150J4	Metric	M20 x 1,5	26	21	12	22	1.500
BP084P01800J4	GAS	1/8" - 28	14	16	9	12	2.500
BP084P01400J4	GAS	1/4" - 19	19	17	9	16	2.500
BP084P03800J4	GAS	3/8" - 19	21	19	10	18	2.500
BP084P01200J4	GAS	1/2" - 14	26	21	12	21,5	1.500
BP084P03400J4	GAS	3/4" - 14	32	21	12	27,5	1.000
BP084P10000J4	GAS	1" - 11	40	21	12	33,5	1.500
BP084P11400J4	GAS	1.1/4" - 11	49	21	12	44	800

MATERIAL
PE-LD (Low density polyethylene)

COLOUR
G6 Yellow RAL 1016

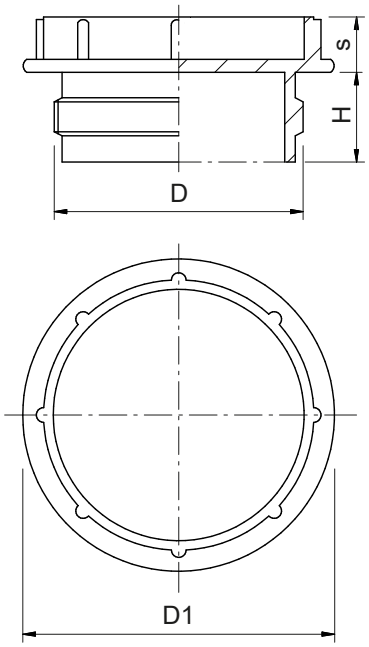

Code G6	Threading	D	D1	H	s	Package (pcs)
BP146M08100J4	Metric	M8 x 1	17	9	10	1.000
BP146M08125J4	Metric	M8 x 1,25	17	9	10	1.000
BP146M10100J4	Metric	M10 x 1	17	9	10	1.000
BP146M10150J4	Metric	M10 x 1,5	17	9	10	1.000
BP146M12100J4	Metric	M12 x 1	19	10	6	1.000
BP146M12125J4	Metric	M12 x 1,25	19	10	6	1.000
BP146M12150J4	Metric	M12 x 1,5	19	10	6	1.000
BP146M12175J4	Metric	M12 x 1,75	19	10	6	1.000
BP146M14100J4	Metric	M14 x 1	21	9	6	1.000
BP146M14150J4	Metric	M14 x 1,5	21	9	6	1.000
BP146M14200J4	Metric	M14 x 2	21	9	6	1.000
BP146M16100J4	Metric	M16 x 1	24	10,5	6	1.000
BP146M16150J4	Metric	M16 x 1,5	24	10,5	6	1.000
BP146M16200J4	Metric	M16 x 2	24	10,5	6	1.000
BP146M18100J4	Metric	M18 x 1	26	10	7	1.000
BP146M18150J4	Metric	M18 x 1,5	26	10	7	1.000
BP146M18200J4	Metric	M18 x 2	26	10	7	1.000
BP146M18250J4	Metric	M18 x 2,5	26	10	7	1.000
BP146M20100J4	Metric	M20 x 1	26	12	7	1.000
BP146M20150J4	Metric	M20 x 1,5	26	12	7	1.000
BP146M20200J4	Metric	M20 x 2	26	12	7	1.000
BP146M20250J4	Metric	M20 x 2,5	26	12	7	1.000
BP146M22100J4	Metric	M22 x 1	29	12	7	1.000
BP146M22150J4	Metric	M22 x 1,5	29	12	7	1.000
BP146M22200J4	Metric	M22 x 2	29	12	7	1.000
BP146M22250J4	Metric	M22 x 2,5	29	12	7	1.000
BP146M24150J4	Metric	M24 x 1,5	32	12	7	1.000
BP146M24200J4	Metric	M24 x 2	32	12	7	1.000
BP146M24300J4	Metric	M24 x 3	32	12	7	1.000
BP146M25150J4	Metric	M25 x 1,5	33	12	7	1.000
BP146M26150J4	Metric	M26 x 1,5	34	12	7	1.000
BP146M27150J4	Metric	M27 x 1,5	34	13	7	1.000

MATERIAL
PE-LD (Low density polyethylene)

COLOUR
G6 Yellow RAL 1016

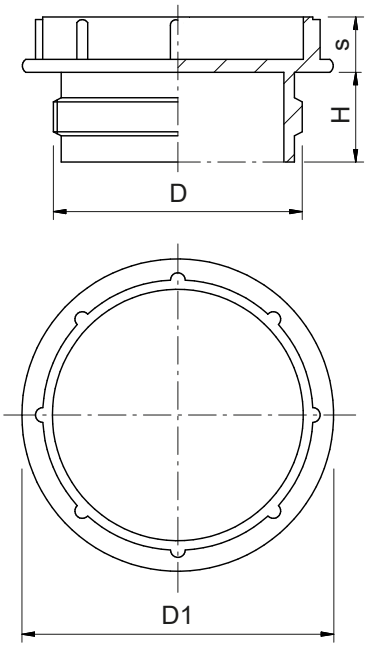

Code G6	Threading	D	D1	H	s	Package (pcs)
BP146M27200J4	Metric	M27 x 2	34	13	7	1.000
BP146M28150J4	Metric	M28 x 1,5	35	13	7	500
BP146M30150J4	Metric	M30 x 1,5	38	14	7	500
BP146M30200J4	Metric	M30 x 2	38	14	7	500
BP146M33150J4	Metric	M33 x 1,5	42	14	7	500
BP146M33200J4	Metric	M33 x 2	42	14	7	500
BP146M36200J4	Metric	M36 x 2	43,5	15,2	10	500
BP146M36150J4	Metric	M36 x 1,5	43,5	15,2	10	500
BP146M39150J4	Metric	M39 x 1,5	46	12	10	500
BP146M42150J4	Metric	M42 x 1,5	54	15	10	250
BP146M42200J4	Metric	M42 x 2	54	15	10	250
BP146M45150J4	Metric	M45 x 1,5	60	15	10	250
BP146M45200J4	Metric	M45 x 2	60	15	10	250
BP146M48200J4	Metric	M48 x 2	60	15	10	250
BP146M52150J4	Metric	M52 x 1,5	65	15	10	250
BP146M52200J4	Metric	M52 x 2	65	15	10	250
BP146P01800J4	GAS	1/8" - 28	17	9	10	1.000
BP146P01400J4	GAS	1/4" - 19	21	9	6	1.000
BP146P03800J4	GAS	3/8" - 19	24	9	6	1.000
BP146P01200J4	GAS	1/2" - 14	27	10	7	1.000
BP146P05800J4	GAS	5/8" - 14	30	10	10	1.000
BP146P03400J4	GAS	3/4" - 14	34	11	7	1.000
BP146P10000J4	GAS	1" - 11	40	11	7	500
BP146P11400J4	GAS	1.1/4" - 11	50	12	10	250
BP146P11200J4	GAS	1.1/2" - 11	57	14	10	250
BP146P20000J4	GAS	2" - 11	70	15	12	250
BP146P21200J4	GAS	2.1/2" - 11	93,5	18	16	50
BP146P30000J4	GAS	3" - 11	96	18	16	50
BP146P40000J4	GAS	4" - 11	118,5	18	16	25
BP146F03800J4	UNF	3/8" - 24	17	10	10	1.000
BP146F07160J4	UNF	7/16" - 20	16	9,5	6	1.000
BP146F01200J4	UNF	1/2" - 20	18	10	6	1.000

MATERIAL
PE-LD (Low density polyethylene)

COLOUR
G6 Yellow RAL 1016

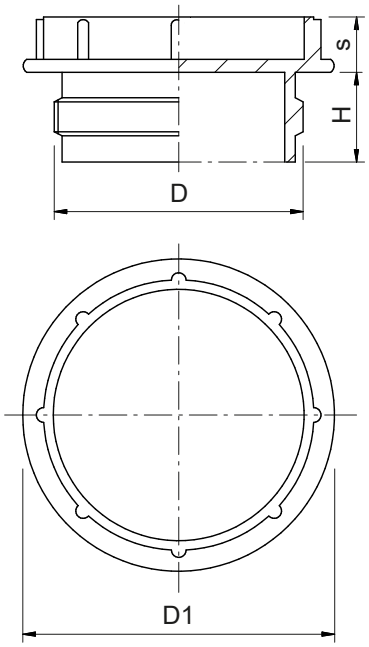

Code G6	Threading	D	D1	H	s	Package (pcs)
BP146F09160J4	UNF	9/16" - 18	19	10	6	1.000
BP146F01116J4	UNF	11/16" - 16	24	11	6	1.000
BP146F03400J4	UNF	3/4" - 16	26	11	7	1.000
BP146F01316J4	UNF	13/16" - 16	26	11	6	1.000
BP146F07800J4	UNF	7/8" - 14	27	13	7	1.000
BP146F10000J4	UNF	1" - 14	33	14	7	1.000
BP146F11160J4	UNF	1.1/16" - 12	34	14	7	1.000
BP146F13160J4	UNF	1.3/16" - 12	38	14,5	7	500
BP146F15160J4	UNF	1.5/16" - 12	40	15,5	7	500
BP146F17160J4	UNF	1.7/16" - 12	40	15,5	7	500
BP146F15800J4	UNF	1.5/8" - 12	52	15,5	10	250
BP146F15801J4	UNF	1.5/8" - 16	52	15,5	10	250
BP146F11116J4	UNF	1.11/16" - 12	57	15	10	250
BP146F17800J4	UNF	1.7/8" - 12	57	15	12	250
BP146F20000J4	UNF	2" - 12	57	15	12	250
BP146F21400J4	UNF	2.1/4" - 12	65	15	12	250
BP146F21200J4	UNF	2.1/2" - 12	73	15	12	250

MATERIAL
PE-LD (Low density polyethylene)

COLOUR
RO Red RAL 3000

NOTES
Available in other colours.

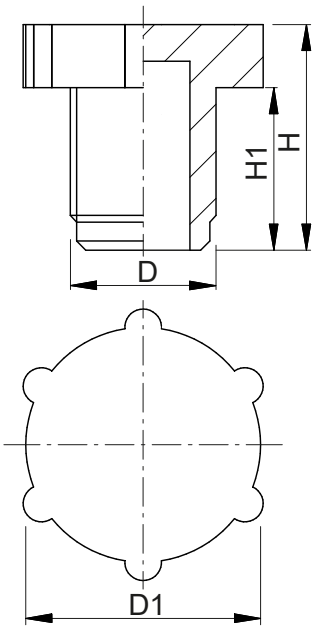

Code RO	Threading	D	D1	H	H1	Package (pcs)
BP014M08000L9	Metric	M8 x 1	12,3	14,3	9,5	5.000
BP014M10000L9	Metric	M10 x 1	15,3	14,6	10,4	5.000
BP014M12100L9	Metric	M12 x 1	18,5	16,7	10,7	5.000
BP014M12150L9	Metric	M12 x 1,5	16,7	16,3	8,7	5.000
BP014M14000L9	Metric	M14 x 1,5	18,5	17,2	9,5	5.000
BP014M16000L9	Metric	M16 x 1,5	22	17,2	12,5	5.000
BP014M18000L9	Metric	M18 x 1,5	24,4	18,3	13,7	4.000
BP014M22000L9	Metric	M22 x 1,5	28,2	18,3	13,7	3.000
BP014M24000L9	Metric	M24 x 1,5	31,3	18,5	13,8	3.000
BP014M25000L9	Metric	M25 x 1,5	31,3	18,5	14	2.000
BP014M52000L9	Metric	M52 x 1,5	63,7	21,5	15,5	500
BP014P00018L9	GAS	1/8" - 28	16,4	10,5	4,2	5.000
BP014P00014L9	GAS	1/4" - 19	18,8	12,8	6,5	5.000
BP014P00038L9	GAS	3/8" - 19	22,9	12	5,5	5.000
BP014P00012L9	GAS	1/2" - 14	28	17,3	10,3	3.000
BP014P00058L9	GAS	5/8" - 14	31,3	18,4	13,9	2.500
BP014P00034L9	GAS	3/4" - 14	32,3	17	11	2.000
BP014P00078L9	GAS	7/8" - 14	38	18,1	13,5	1.500
BP014P00100L9	GAS	1" - 11	39,8	16,9	10,8	1.500
BP014P00114L9	GAS	1.1/4" - 11	49,9	20,9	15	800
BP014P00112L9	GAS	1.1/2" - 11	55,2	16,9	10,8	600
BP014P00200L9	GAS	2" - 11	73,7	17,5	10,7	400
BP014P00300L9	GAS	3" - 11	105	16,5	11,3	150
BP014F05160L9	UNF	5/16" - 18	14,5	12	7,4	5.000
BP014F03800L9	UNF	3/8" - 24	13,7	14	9,5	5.000
BP014F07160L9	UNF	7/16" - 20	17,4	16,1	11	5.000
BP014F01200L9	UNF	1/2" - 20	18,5	15,3	10,5	5.000
BP014F09160L9	UNF	9/16" - 18	22,6	15,4	10,7	5.000
BP014F05800L9	UNF	5/8" - 18	21	14,8	10	5.000
BP014F01116L9	UNF	11/16" - 16	25,6	18,1	13,5	3.000

MATERIAL
PE-LD (Low density polyethylene)

COLOUR
R0 Red RAL 3000

NOTES
Available in other colours.

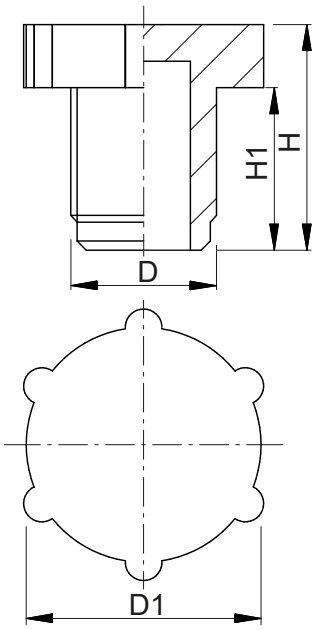

Code R0	Threading	D	D1	H	H1	Package (pcs)
BP014F03400L9	UNF	3/4" - 16	27	18,7	13,8	3.000
BP014F01316L9	UNF	13/16" - 16	26,7	18,1	13,5	2.500
BP014F07800L9	UNF	7/8" - 14	28,8	18,5	13,6	2.500
BP014F10000L9	UNF	1" - 14	32	17,8	13,2	2.000
BP014F11160L9	UNF	1.1/16" - 12	33,4	18,4	13,8	2.000
BP014F13160L9	UNF	1.3/16" - 12	36,8	18,3	13,5	1.500
BP014F15160L9	UNF	1.5/16" - 12	39,3	16,3	11	1.500
BP014F15800L9	UNF	1.5/8" - 12	50,6	17,3	12,9	800
BP014F13400L9	UNF	1.3/4" - 12	53,2	19,7	13,8	500
BP014F17800L9	UNF	1.7/8" - 12	58,4	22,5	16,7	400
BP014F21200L9	UNF	2.1/2" - 12	73,6	20,6	15	300

MATERIAL
PE-LD (Low density polyethylene)

COLOUR
R0 Red RAL 3000

NOTES
Available in other colours.

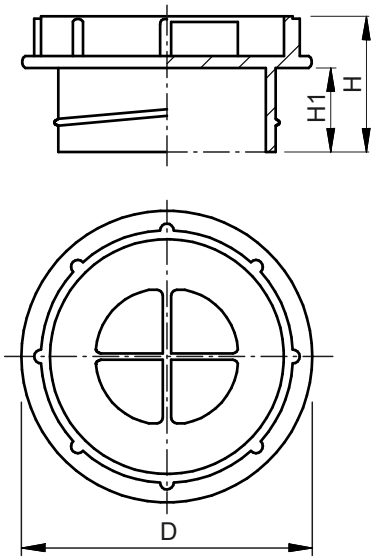

Code R0	D	H	H1	Use - Female thread			Package (pcs)
				GAS	Metric	UNF	
BP088P01800L9	14,3	6,0	3,5	1/8"	M10	-	5.000
BP088P01400L9	17,6	8,1	5,3	1/4"	M12	1/2"	5.000
BP088P03800L9	21,7	8,0	5,4	3/8"	M16	-	5.000
BP088P01200L9	26,0	9,3	5,6	1/2"	M20	-	5.000
BP088P05800L9	27,5	13,7	9,7	5/8"	M22	7/8"	5.000
BP088P03400L9	31,4	10,8	5,9	3/4"	-	-	2.000
BP088P10000L9	37,6	12,8	5,2	1"	-	-	2.000
BP088P11400L9	49,5	10,1	5,0	1.1/4"	-	-	1.000
BP088P11200L9	55,0	12,8	5,0	1.1/2"	-	-	1.000
BP088P20000L9	68,0	22,0	8,0	2"	-	-	500
BP088P11160L9	31,4	5,9	5,9	-	M26	1.1/16"	2.000

MATERIAL
PE-LD (Low density polyethylene)

COLOUR
R0 Red RAL 3000

NOTES
Available in other colours. and with sealing gasket.

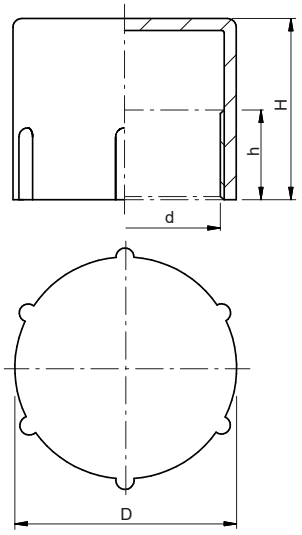

Code R0	Threading	d	D	H	h	Package (pcs)
BP052M08100L9	Metric	M8 x 1	9,9	10	7	2.500
BP052M10100L9	Metric	M10 x 1	11,9	10	7,5	2.500
BP052M12100L9	Metric	M12 x 1	13,8	12	9,5	2.500
BP052M12150L9	Metric	M12 x 1,5	14	12	9,5	2.500
BP052M14150L9	Metric	M14 x 1,5	15,9	12	9,5	2.500
BP052M1415BL9	Metric	M14 x 1,5	16	20,6	9,2	2.500
BP052M16150L9	Metric	M16 x 1,5	17,9	12	9,5	2.500
BP052M1615BL9	Metric	M16 x 1,5	18	21	9	2.500
BP052M18150L9	Metric	M18 x 1,5	19,7	14	11,5	2.000
BP052M20150L9	Metric	M20 x 1,5	21,9	14	9,5	2.000
BP052M22150L9	Metric	M22 x 1,5	24,3	13,8	11,5	1.500
BP052M2215BL9	Metric	M22 x 1,5	24,4	24,5	17,5	1.250
BP052M24150L9	Metric	M24 x 1,5	26,2	14	11,5	1.500
BP052M25150L9	Metric	M25 x 1,5	27,2	14	11,5	1.000
BP052M26150L9	Metric	M26 x 1,5	28,3	14	11,5	1.000
BP052M28150L9	Metric	M28 x 1,5	32	14	12,4	1.000
BP052M30200L9	Metric	M30 x 2	34	14	11,5	1.500
BP052M36200L9	Metric	M36 x 2	38,8	16	13,5	1.500
BP052M42200L9	Metric	M42 x 2	44,5	16	13,5	500
BP052M52200L9	Metric	M52 x 2	54,7	16	13,5	500
BP052P01800L9	GAS	1/8" - 28	11,8	12	6,5	2.500
BP052P01400L9	GAS	1/4" - 19	14,8	11	8	2.500
BP052P03800L9	GAS	3/8" - 19	18,7	11,3	7,4	2.500
BP052P01200L9	GAS	1/2" - 14	23,2	13,5	7	2.500
BP052P05800L9	GAS	5/8" - 14	25,4	15,7	10	1.500
BP052P03400L9	GAS	3/4" - 14	29,4	17,7	11,2	1.000
BP052P07800L9	GAS	7/8" - 14	32,4	19,5	12,5	1.500
BP052P10000L9	GAS	1" - 11	36	19	14,5	1.500
BP052P11400L9	GAS	1.1/4" - 11	44,4	19,8	13	1.000
BP052P11200L9	GAS	1.1/2" - 11	50,3	20,5	14	700

MATERIAL
PE-LD (Low density polyethylene)

COLOUR
RO Red RAL 3000

NOTES
Available in other colours. and with sealing gasket.

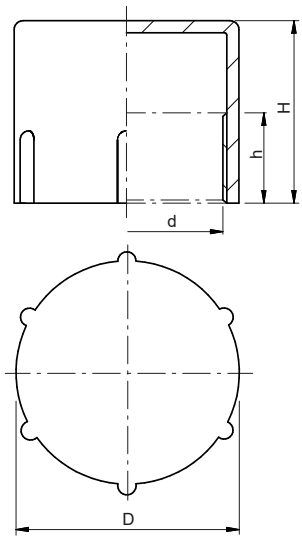

Code RO	Threading	d	D	H	h	Package (pcs)
BP052P20000L9	GAS	2" - 11	61,9	21	15	400
BP052P21400L9	GAS	2.1/4" - 11	71,5	25	17,5	350
BP052P21200L9	GAS	2.1/2" - 11	77,9	27,6	19	300
BP052F03800L9	UNF	3/8" - 24	11	8,3	4	2.500
BP052F0716BL9	UNF	7/16" - 24	13,3	13,7	7,8	2.500
BP052F0716AL9	UNF	7/16" - 20	13,3	12,9	8	2.500
BP052F01200L9	UNF	1/2" - 20	14,5	13,5	9,5	2.500
BP052F09160L9	UNF	9/16" - 18	16,5	13,5	9,5	2.500
BP052F05800L9	UNF	5/8" - 18	18,2	15,6	7,5	2.500
BP052F03400L9	UNF	3/4" - 16	21,7	13,8	9,5	2.500
BP052F01316L9	UNF	13/16" - 16	23,3	15,3	9,3	2.500
BP052F0780AL9	UNF	7/8" - 14	24,9	20,2	14,4	2.500
BP052F0780BL9	UNF	7/8" - 18	25,3	20	14	2.500
BP052F10000L9	UNF	1" - 14	27,6	17,2	12	1.500
BP052F11160L9	UNF	1.1/16" - 12	29,4	19	11	1.500
BP052F13160L9	UNF	1.3/16" - 12	32,7	19,1	13	1.250
BP052F15160L9	UNF	1.5/16" - 12	36,4	22,2	14,5	1.250
BP052F13800L9	UNF	1.3/8" - 12	37,4	24,5	10,5	1.000
BP052F17160L9	UNF	1.7/16" - 12	38,9	21,7	15,2	1.000
BP052F15800L9	UNF	1.5/8" - 12	44,8	22	14	1.000
BP052F17800L9	UNF	1.7/8" - 12	50,3	25	15	1.500

MATERIAL
PE-LD (Low density polyethylene)

COLOUR
R0 Red RAL 3000

NOTES
Available in other colours. and with sealing gasket.

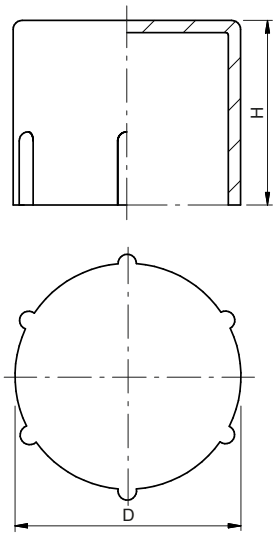

Code R0	Threading	Use male thread	D	H	Package (pcs)
BP053M12000L9	Metric	M12	14	12	2.500
BP053M14000L9	Metric	M14	15,9	12	2.500
BP053M16000L9	Metric	M16	17,9	12	2.500
BP053M18000L9	Metric	M18	19,7	14	2.000
BP053P01400L9	GAS	1/4"	14,8	11	2.500
BP053P03800L9	GAS	3/8"	18,7	11,3	2.500
BP053P01200L9	GAS	1/2"	23,2	13,5	2.500
BP053P03400L9	GAS	3/4"	29,4	17,7	2.500
BP053P10000L9	GAS	1"	36	19	2.000
BP053F13160L9	UNF	1.3/16"	32,7	19	1.250

MATERIAL
PE-LD (Low density polyethylene)

COLOUR
N5 Black RAL 9005

NOTES
Available in other colours.

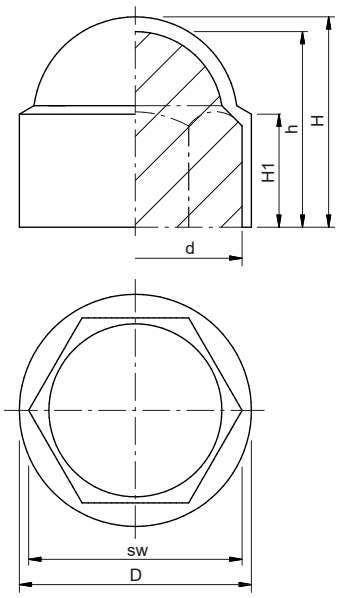

Code N5	Use thread	d	D	H	H1	h	sw	Package (pcs)
BP004004000M0	M4	6,9	9	8,3	3,5	7,5	7	2.000
BP004005000M0	M5	7,9	10,9	9,5	5	8,5	8	2.000
BP004006000M0	M6	9,8	12,9	13	6	12	10	2.000
BP004007000M0	M7	10,8	14,1	13	6,5	12	11	1.000
BP004008000M0	M8	12,8	16,8	15	9	14	13	2.000
BP004010000M0	M10	16,7	21,3	19,5	9	18,5	17	2.500
BP004012000M0	M12	18,7	23,6	21,5	11	20	19	2.000
BP004014000M0	M14	21,7	27,5	24	12	22,5	22	600
BP004016000M0	M16	23,7	29,8	27	14	25,5	24	500
BP004018000M0	M18	26,8	34	43	15	29	27	500
BP004020000M0	M20	29,8	37,7	33,2	17	31	30	450
BP004022000M0	M22	31,8	39,7	36,2	19	34	32	200
BP004024000M0	M24	35,8	44,4	39,2	20	38	36	200
BP004027000M0	M27	40,8	50,1	46,5	23	44	41	200
BP004030000M0	M30	45,8	55,9	51,5	25	49	46	100
BP004033000M0	M33	49,8	60,5	55,5	27	53	50	100
BP004036000M0	M36	54,8	67	59,5	30	57	55	50
BP004039000M0	M39	59,7	72	62,5	38	60	60	50
BP004042000M0	M42	63,7	76,5	65,5	42	63	65	50
BP004045000M0	M45	69,7	85,5	75,5	38	73	70	45
BP004048000M0	M48	75	91,6	81	41	78,5	75	50
BP004052000M0	M52	80	98	86,2	43,5	83,4	80	50
BP004056000M0	M56	85	104,2	91,6	48	88,6	85	35
BP004064000M0	M64	95	116,7	105,5	55	102	95	25

MATERIAL
PE-LD (Low density polyethylene)

COLOUR
N5 Black RAL 9005

NOTES
Available in other colours.

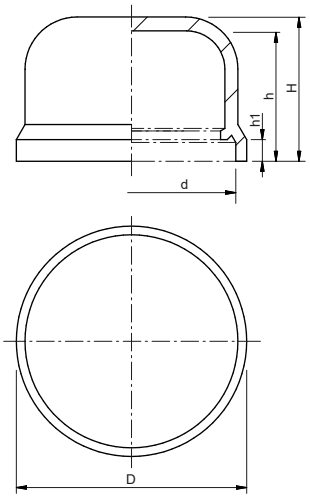

Code N5	Use thread	d	D	H	h	h1	Package (pcs)
BP137006000M0	M6	13,5	14,5	8	7	1,6	5.000
BP137008000M0	M8	17,5	19,8	11,7	10,7	1,6	1.000
BP137010000M0	M10	22,8	24	13,7	12	2	1.000
BP137012000M0	M12	24	26,5	16,6	15	2,5	1.000
BP137014000M0	M14	28,1	30,3	23,6	21,8	2,5	2.500
BP137016000M0	M16	30,5	32,9	18,7	16,7	3	1.000
BP137018000M0	M18	35	37	28	26,3	3	1.250
BP137020000M0	M20	39,3	41	27,5	24,7	3	1.000
BP137022000M0	M22	42,5	44,1	31,7	29,6	3	2.000
BP137024000M0	M24	46,5	48,5	34,3	31,5	4	2.000

MATERIAL
PE-LD (Low density polyethylene)

COLOUR
N5 Black RAL 9005
B3 White RAL 9003
G0 Grey RAL 7040

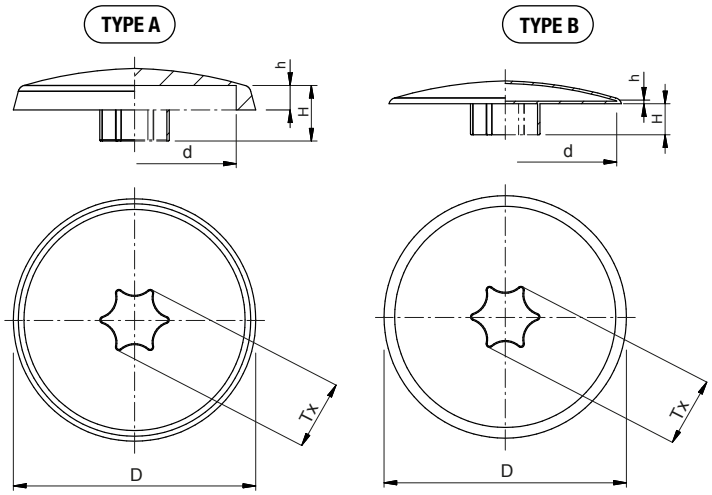

Code N5	Code B3	Code G0	Type	Tx	D	d	H	h	Package (pcs)
BP029001025M0	BP029001025M4	BP029001025N7	A	25	16,5	13	4,1	2,7	500
BP029001030M0	BP029001030M4	BP029001030N7	A	30	16,5	14,4	1,6	3,3	500
BP029001040M0	BP029001040M4	BP029001040N7	A	40	16,2	14,2	4,8	2,6	500
BP029002010M0	BP029002010M4	BP029002010N7	B	10	12	-	1,2	0	500
BP029002015M0	BP029002015M4	BP029002015N7	B	15	12	-	1,5	1,6	500
BP029002020M0	BP029002020M4	BP029002020N7	B	20	11,5	-	1,6	2,1	500
BP029002025M0	BP029002025M4	BP029002025N7	B	25	14,6	12,8	2,4	0,3	500
BP029002030M0	BP029002030M4	BP029002030N7	B	30	16,2	13,5	2,4	0,5	500
BP029002040M0	BP029002040M4	BP029002040N7	B	40	18	15,2	2,4	0,1	500

MATERIAL
PE-LD (Low density polyethylene)

COLOUR
N5 Black RAL 9005
B3 White RAL 9003

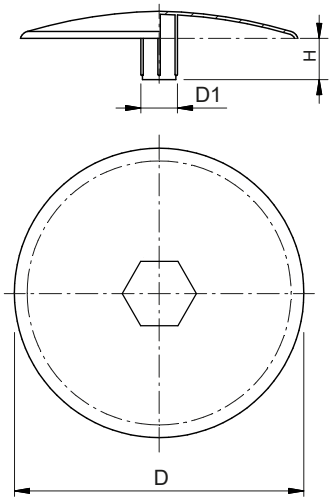

Code N5	Code B3	D1	D	H	Package (pcs)
BP136251204M0	**BP136251204M4**	2,5	12	4	1.000
BP136261206M0	**BP136261206M4**	2,6	12	6	1.000
BP136321206M0	**BP136321206M4**	3,2	12	6	1.000
BP136321506M0	**BP136321506M4**	3,2	15	6	1.000

MATERIAL
PE-LD (Low density polyethylene)

COLOUR
N5 Black RAL 9005

USE
Suitable for hexagon socket countersunk flat head screws DIN 7991.

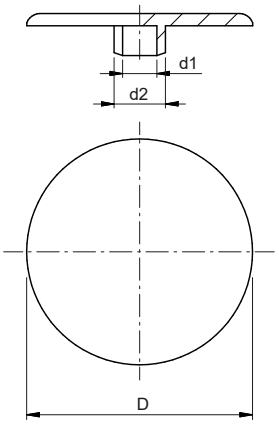

Code N5	Use screw	D	d1	d2	Package (pcs)
BP043005000M0	M5	17	2,8	4,3	5.000
BP043006000M0	M6	17	3	5,2	5.000
BP043008000M0	M8	18	4	6,2	5.000
BP043010000M0	M10	18	6	8,4	5.000

MATERIAL
PE-LD (Low density polyethylene)

COLOUR
N5 Black RAL 9005
B3 White RAL 9003
G4 Grey RAL 7042

USE
Suitable for hexagon head cap screws DIN 912.

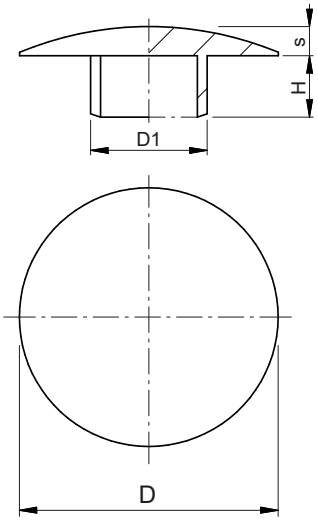

Code N5	Code B3	Code G4	Use screw	D1	D	H	S	Package (pcs)
BP044005000M0	**BP044005000M4**	**BP044005000K2**	M5	4,2	9	2,5	1,3	1.000
BP044006000M0	**BP044006000M4**	**BP044006000K2**	M6	5,2	10	3,1	1,4	1.000
BP044008000M0	**BP044008000M4**	**BP044008000K2**	M8	6,2	13	4	1,5	1.000
BP044010000M0	**BP044010000M4**	**BP044010000K2**	M10	8,2	16	5	1,6	500
BP044012000M0	**BP044012000M4**	**BP044012000K2**	M12	10,3	18	6,4	1,8	500
BP044016000M0	**BP044016000M4**	**BP044016000K2**	M16	14,4	24	7	2,2	500
BP044020000M0	**BP044020000M4**	**BP044020000K2**	M20	17,4	30	9	2,5	500

MATERIAL
PP (Polypropylene)

COLOUR
N5 Black RAL 9005
B3 White RAL 9003

NOTES
Available in other colours.

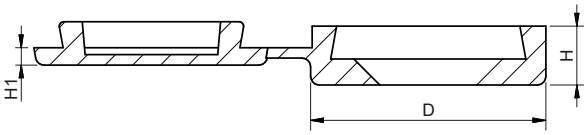

Code N5	Code B3	D	H	H1	Use screw diameter	Package (pcs)
BP013035060M0	**BP013035060M4**	13,6	3,4	1	3,5 ÷ 6	5.000
BP013050060M0	**BP013050060M4**	17,5	5	1	5 ÷ 6	5.000

MATERIAL
PE-HD (High density polyethylene)

COLOUR
N5 Black RAL 9005

NOTES
Available in other colours.

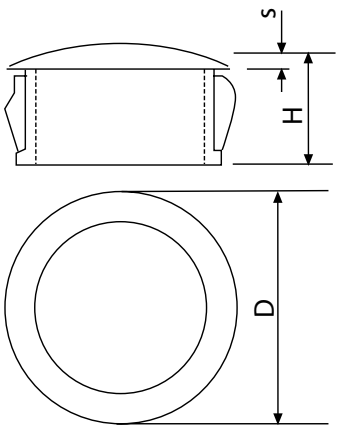

Code N5	Diameter hole	D	H	s	Panel thickness (max)	Package (pcs)
BP175004816M0	4,8	6,4	5,9	1,6	1,6	1.000
BP175006416M0	6,4	8	8	1,6	1,6	1.000
BP175008016M0	8	9,5	8	1,6	1,6	1.000
BP175009532M0	9,5	12	10	1,6	3,2	1.000
BP175011032M0	11,1	13,5	10,3	1,6	3,2	1.000
BP175012732M0	12,7	14,6	10,3	1,6	3,2	1.000
BP175014332M0	14,3	16,7	10,3	1,6	3,2	1.000
BP175015932M0	15,9	18,2	10,3	1,6	3,2	1.000
BP175017532M0	17,5	20	10,3	1,6	3,2	1.000
BP175019032M0	19	23,2	10,3	1,6	3,2	1.000
BP175020025M0	20	22,6	11,5	1,6	2,5	1.000
BP175020632M0	20,6	22,6	10,3	1,6	3,2	1.000
BP175022232M0	22,2	25,8	11,5	1,6	3,2	1.000
BP175025025M0	25	29,8	11,5	1,6	2,5	1.000
BP175025432M0	25,4	30,6	11,5	1,6	3,2	1.000
BP175030032M0	30	33,3	11,5	1,6	3,2	1.000

MATERIAL
ABS (Acrylonitrile butadiene styrene)

COLOUR
N5 Black RAL 9005

NOTES
Available in other colours.

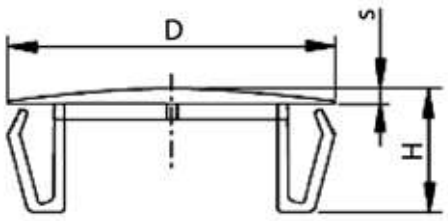

Code N5	Use		D	H	s	Package (pcs)
	Panel hole	Panel thickness				
BP007009513M0	9,5 ÷ 13	0,8 ÷ 3,2	16	13,2	2	1.000
BP007011514M0	11,5 ÷ 14,5	0,8 ÷ 3,2	18,5	12,5	2	1.000
BP007015018M0	15 ÷ 18	0,8 ÷ 3,2	21,5	12	2	1.000
BP007018422M0	18,4 ÷ 22	0,8 ÷ 3,2	25,3	12,7	2	1.000
BP007022027M0	22 ÷ 27	0,8 ÷ 3,2	32,5	13,7	2	1.000
BP007027033M0	27 ÷ 33	0,8 ÷ 3,2	35	13,5	2	1.000
BP007035040M0	35 ÷ 40	0,8 ÷ 3,2	43,3	13,1	2	1.000
BP007044549M0	44,5 ÷ 49	0,8 ÷ 3,2	52,5	13,7	2	500

MATERIAL
PVC (Polyvinyl chloride)

COLOUR
N5 Black RAL 9005

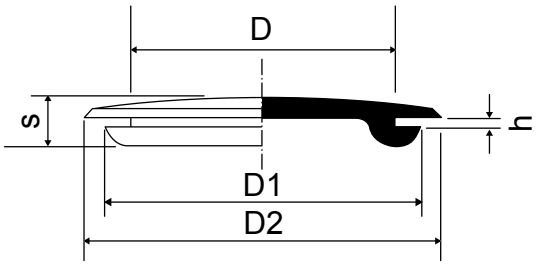

Code N5	D	D1	D2	h	s	Package (pcs)
BP021004716M0	4,7	9,3	9,3	1,6	4,6	10.000
BP021006416M0	6,4	9,5	9,5	1,6	5	10.000
BP021008008M0	8	10,6	14,5	0,8	4	10.000
BP021008016M0	8	10,6	14,5	1,6	4,5	10.000
BP021009016M0	9	12,4	15	1,6	6,6	10.000
BP021011216M0	11,2	12,8	17,7	1,6	6,2	10.000
BP021011516M0	11,5	15,5	17	1,6	7	10.000
BP021011912M0	11,9	15,9	17,5	1,2	7,1	10.000
BP021012008M0	12	13,1	19	0,8	6,5	10.000
BP021012716M0	12,7	15,5	18,7	1,6	5,6	10.000
BP021014913M0	14,9	18,4	20	1,3	7	10.000
BP021015516M0	15,5	19	22	1,6	7,5	10.000
BP021015916M0	15,9	19	19	1,6	7,1	10.000
BP021016313M0	16,3	18,5	20	1,3	7	10.000
BP021019016M0	19	21,5	25	1,6	6,5	5.000
BP021020016M0	20	21,5	25	1,6	6,5	5.000
BP021022024M0	22	26,6	28,5	2,4	8,2	3.000
BP021022516M0	22,5	27	28,5	1,6	7,5	3.000
BP021024524M0	24,5	27,5	30	2,4	8,7	4.000
BP021025008M0	25	28,5	38,5	0,8	4,6	3.000
BP021025416M0	25,4	28,3	32	1,6	9	3.000
BP021025424M0	25,4	28,3	32	2,4	9	3.000
BP021031508M0	31,5	31,5	38,2	0,8	7	2.000
BP021031516M0	31,5	35,4	38,2	1,6	7,5	2.000
BP021032031M0	32	35,4	38,2	3,1	9	2.000
BP021038216M0	38,2	43	43,7	1,6	8,2	1.500
BP021051516M0	51,5	52,6	57,5	1,6	11,4	500

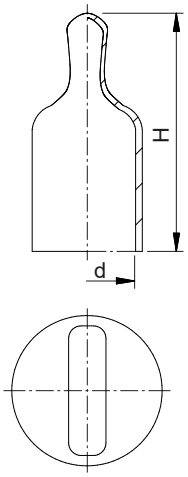

MATERIAL
PVC (Polyvinyl chloride)

COLOUR
N5 Black RAL 9005

Code N5	d	H	Use male thread			Package (pcs)
			Metric	GAS	UNF	
BP019036013M0	3,6	13	M4	-	-	2.500
BP019048013M0	4,8	13	M4	-	-	2.500
BP019053013M0	5,3	13	M6	-	7/32"	2.500
BP019061013M0	6,1	13	-	-	1/4"	2.500
BP019075013M0	7,5	13	-	-	-	2.500
BP019075025M0	7,5	25	-	-	-	2.500
BP019077013M0	7,7	13	M8	-	5/16"	2.500
BP019077025M0	7,7	25	-	-	-	2.500
BP019087013M0	8,7	13	-	-	-	1.500
BP019087025M0	8,7	25	-	-	-	1.500
BP019093013M0	9,3	13	M10	1/8"	3/8"	2.500
BP019093025M0	9,3	25	-	-	-	1.500
BP019097013M0	9,7	13	-	-	-	1.250
BP019097025M0	9,7	25	-	-	-	1.250
BP019108013M0	10,8	13	-	-	7/16"	2.500
BP019108025M0	10,8	25	-	-	-	2.500
BP019111013M0	11,1	13	-	-	-	2.500
BP019111025M0	11,1	25	-	-	-	2.500
BP019119013M0	11,9	13	M12	-	1/2"	2.500
BP019119025M0	11,9	25	-	-	-	2.000
BP019124013M0	12,4	13	-	1/4"	1/2"	2.500
BP019132013M0	13,2	13	M14	-	17/32"	2.500
BP019132025M0	13,2	25	-	-	-	1.250
BP019143025M0	14,3	25	M15	-	9/16"	1.250
BP019153013M0	15,3	13	M16	-	-	1.250
BP019153025M0	15,3	25	-	-	-	1.000
BP019159025M0	15,9	25	-	3/8"	5/8"	1.000
BP019163013M0	16,3	13	M18	-	11/16"	1.250
BP019163025M0	16,3	25	-	-	-	1.250
BP019174013M0	17,4	13	M18			1.500
BP019174025M0	17,4	25	M18	-	-	1.500
BP019188013M0	18,8	13	M20	-	3/4"	1.250
BP019188025M0	18,8	25	-	-	-	1.250
BP019200013M0	20	13	-	-	-	1.250
BP019200025M0	20	25	-	-	-	1.250
BP019206013M0	20,6	13	M22	1/2"	13/16"	1.250
BP019206025M0	20,6	25	-	-	-	1.000
BP019220025M0	22	25	-	5/8"	7/8"	1.000
BP019238013M0	23,8	13	-	-	-	1.500
BP019238025M0	23,8	25	-	-	-	1.500
BP019246025M0	24,6	25	M25	-	-	1.000
BP019251025M0	25,1	25	M26	-	1"	1.500
BP019269025M0	26,9	25	-	-	-	1.500
BP019312038M0	31,2	38	M32	1"	1.1/4"	1.000
BP019349038M0	34,9	38	M35	-	1.3/8"	350
BP019408038M0	40,8	38	-	-	1.5/8"	350

MATERIAL
PVC (Polyvinyl chloride)

COLOUR
N5 Black RAL 9005

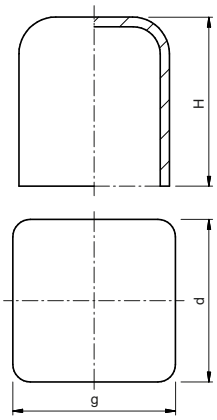

Code (N5)	d x g	H	Package (pcs)
BP111080215M0	8 x 2	15	2.000
BP111080415M0	8 x 4	15	2.000
BP111100115M0	10 x 1,5	15	2.000
BP111100315M0	10 x 3	15	2.000
BP111100825M0	10 x 8	25	2.000
BP111101025M0	10 x 10	25	1.600
BP111120315M0	12 x 3	15	2.000
BP111120415M0	12 x 4	15	2.000
BP111120625M0	12 x 6	25	2.000
BP111121230M0	12 x 12	30	4.000
BP111130220M0	13 x 2,5	20	2.000
BP111130515M0	13 x 5	15	2.000
BP111140215M0	14 x 2	15	2.000
BP111140825M0	14 x 8	25	2.000
BP111150125M0	15 x 1,5	15	2.000
BP111150320M0	15 x 3	20	2.000
BP111150625M0	15 x 6	25	1.000
BP111150825M0	15 x 8	25	1.000
BP111151525M0	15 x 15	25	200
BP111160220M0	16 x 2	20	1.000
BP111180220M0	18 x 2	20	1.000
BP111180320M0	18 x 3	20	1.000
BP111180420M0	18 x 4	20	1.000
BP111181830M0	18 x 18	30	1.000
BP111190220M0	19 x 2	20	1.000
BP111190320M0	19 x 2,5	20	1.000
BP111190825M0	19 x 8	25	1.000
BP111190725M0	19,5 x 7,5	25	1.000
BP111200220M0	20 x 2	20	1.000
BP111200325M0	20 x 3	25	5.000
BP111200425M0	20 x 4	25	1.000
BP111200520M0	20 x 5	20	1.000
BP111200625M0	20 x 6	25	1.000
BP111200825M0	20 x 8	25	1.000
BP111201025M0	20 x 10	25	1.000
BP111202030M0	20 x 20	30	1.000
BP111220525M0	22 x 5	25	500
BP111230425M0	23 x 4	25	500
BP111230825M0	23 x 8	25	500
BP111240220M0	24 x 2	20	6.500

MATERIAL
PVC (Polyvinyl chloride)

COLOUR
N5 Black RAL 9005

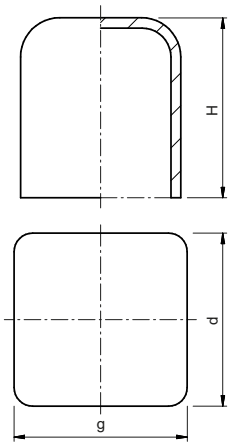

Code N5	d x g	H	Package (pcs)
BP111240525M0	24 x 5	25	1.000
BP111250325M0	25 x 3	25	1.000
BP111250425M0	25 x 4	25	1.000
BP111250525M0	25 x 5	25	1.000
BP111250825M0	25 x 8	25	1.000
BP111251025M0	25 x 10	25	400
BP111251525M0	25 x 15	25	2.000
BP111252530M0	25 x 25	30	100
BP111280425M0	28 x 4	25	500
BP111280220M0	28,5 x 2	20	500
BP111290525M0	29 x 5	25	500
BP111300220M0	30 x 2	20	1.000
BP111300320M0	30 x 3	20	500
BP111300425M0	30 x 4	25	500
BP111300525M0	30 x 5	25	500
BP111300625M0	30 x 6	25	500
BP111300825M0	30 x 8	25	500
BP111301030M0	30 x 10	30	500
BP111301230M0	30 x 12	30	500
BP111301530M0	30 x 15	30	1.250
BP111302030M0	30 x 20	30	800
BP111302530M0	30 x 25	30	500
BP111303040M0	30 x 30	40	500
BP111340220M0	34 x 2	20	500
BP111350525M0	35 x 5	25	3.000
BP111350825M0	35 x 8	25	1.000
BP111351030M0	35 x 10	30	1.000
BP111352530M0	35 x 25	30	500
BP111353540M0	35 x 35	40	400
BP111372030M0	37 x 20	30	500
BP111380220M0	38 x 2	20	500
BP111380325M0	38 x 3	25	500
BP111390220M0	39 x 2	20	500
BP111400325M0	40 x 3	25	500
BP111400425M0	40 x 4	25	500
BP111400825M0	40 x 8	25	2.500
BP111401030M0	40 x 10	30	500
BP111401530M0	40 x 15	30	100
BP111402030M0	40 x 20	30	100
BP111402530M0	40 x 25	30	100

MATERIAL
PVC (Polyvinyl chloride)

COLOUR
N5 Black RAL 9005

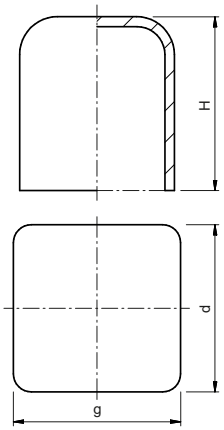

Code (N5)	d x g	H	Package (pcs)
BP111403040M0	40 x 30	40	400
BP111404040M0	40 x 40	40	300
BP111440325M0	44 x 3	25	100
BP111450825M0	45 x 8	25	100
BP111452430M0	45 x 24	30	500
BP111453040M0	45 x 30	40	500
BP111454540M0	45 x 45	40	500
BP111480220M0	48 x 2	20	500
BP111480425M0	48 x 4	25	500
BP111500525M0	50 x 5	25	500
BP111501030M0	50 x 10	30	500
BP111501230M0	50 x 12	30	500
BP111502030M0	50 x 20	30	500
BP111502530M0	50 x 25	30	1.000
BP111503040M0	50 x 30	40	500
BP111504040M0	50 x 40	40	500
BP111505040M0	50 x 50	40	800
BP111551230M0	55 x 12	30	100
BP111553540M0	55 x 35	40	100
BP111570220M0	57 x 2	20	200
BP111600525M0	60 x 5	25	200
BP111601030M0	60 x 10	30	200
BP111601530M0	60 x 15	30	200
BP111603040M0	60 x 30	40	250
BP111604040M0	60 x 40	40	200
BP111606040M0	60 x 60	40	150
BP111656540M0	65 x 65	40	200
BP111686840M0	68 x 68	40	200
BP111704040M0	70 x 40	40	250
BP111764020M0	76 x 40	20	100
BP111806040M0	80 x 60	40	100
BP111808040M0	80 x 80	40	100
BP111905040M0	90 x 50	40	100
BP111A05040M0	100 x 50	40	100
BP111A06040M0	100 x 60	40	100
BP111A0A040M0	100 x 100	40	100

MATERIAL
PVC (Polyvinyl chloride)

COLOUR
N5 Black RAL 9005

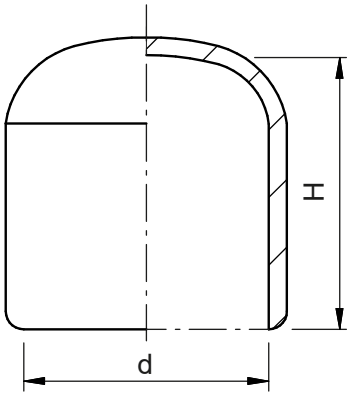

Code N5	d	H	Package (pcs)
BP034006000M0	6	13	5.000
BP034008000M0	8	15,5	2.500
BP034010000M0	10	16,5	2.500
BP034012000M0	12	19	1.750
BP034016000M0	16	26	1.500
BP034018000M0	18	26	1.250
BP034019000M0	19	26	1.125
BP034020000M0	20	26,5	1.125
BP034021000M0	21	27,5	1.000
BP034022000M0	22	29	875
BP034025000M0	25	31	1.250
BP034027000M0	27	31	1.000
BP034028000M0	28	32	1.000
BP034030000M0	30	32	900
BP034032000M0	32	32	800
BP034034000M0	34	33	700
BP034035000M0	35	32,5	700
BP034038000M0	38	32	550
BP034040000M0	40	34	550
BP034042000M0	42	32	500
BP034045000M0	45	36	450
BP034048000M0	48	36	400
BP034049000M0	49	36	400
BP034054000M0	54	39	350
BP034059000M0	59	36	250
BP034063000M0	63	37	225
BP034069000M0	69	37	200
BP034075000M0	75	39	150
BP034090000M0	90	39	100

MATERIAL
PVC (Polyvinyl chloride)

COLOUR
N5 Black RAL 9005

NOTES
Available in other colours and dimensions.

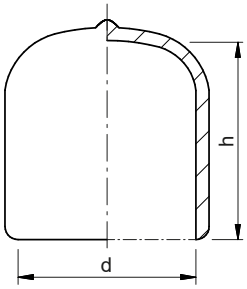

Code N5	d	h	Package (pcs)
BP008002013M0	2	13	1.250
BP008002413M0	2,4	13	1.250
BP008002813M0	2,8	13	1.250
BP008003213M0	3,2	13	1.250
BP008003613M0	3,6	13	1.250
BP008003619M0	3,6	19	1.250
BP008003625M0	3,6	25	1.250
BP008003913M0	3,9	13	1.250
BP008003919M0	3,9	19	1.250
BP008003925M0	3,9	25	1.250
BP008004413M0	4,4	13	1.250
BP008004419M0	4,4	19	1.250
BP008004425M0	4,4	25	1.250
BP008004813M0	4,8	13	1.250
BP008004819M0	4,8	19	1.250
BP008004825M0	4,8	25	1.250
BP008005213M0	5,2	13	1.250
BP008005219M0	5,2	19	1.250
BP008005225M0	5,2	25	1.250
BP008005513M0	5,5	13	1.250
BP008005519M0	5,5	19	1.250
BP008005525M0	5,5	25	1.250
BP008005913M0	5,9	13	1.250
BP008005919M0	5,9	19	1.250
BP008005925M0	5,9	25	1.250
BP008006413M0	6,4	13	1.250
BP008006419M0	6,4	19	1.250
BP008006425M0	6,4	25	1.250
BP008007013M0	7	13	1.250
BP008007019M0	7	19	1.250
BP008007025M0	7	25	1.250
BP008007713M0	7,7	13	1.250
BP008007719M0	7,7	19	1.250
BP008007725M0	7,7	25	1.250
BP008007913M0	7,9	13	1.250
BP008007919M0	7,9	19	1.250
BP008007925M0	7,9	25	1.250
BP008008313M0	8,3	13	1.250
BP008008319M0	8,3	19	1.250
BP008008325M0	8,3	25	1.250
BP008008713M0	8,7	13	1.250
BP008008719M0	8,7	19	1.250

MATERIAL
PVC (Polyvinyl chloride)

COLOUR
N5 Black RAL 9005

NOTES
Available in other colours and dimensions.

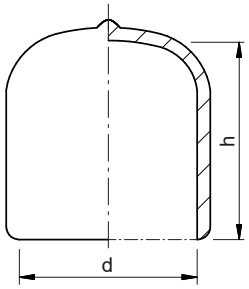

Code N5	d	h	Package (pcs)
BP008008725M0	8,7	25	1.250
BP008009513M0	9,5	13	1.250
BP008009519M0	9,5	19	1.250
BP008009525M0	9,5	25	1.250
BP008010313M0	10,3	13	1.250
BP008010319M0	10,3	19	1.250
BP008010325M0	10,3	25	1.250
BP008011113M0	11,1	13	1.250
BP008011119M0	11,1	19	1.250
BP008011125M0	11,1	25	1.250
BP008011913M0	11,9	13	1.250
BP008011919M0	11,9	19	1.250
BP008011925M0	11,9	25	1.250
BP008012713M0	12,7	13	1.250
BP008012719M0	12,7	19	1.250
BP008012725M0	12,7	25	1.250
BP008013513M0	13,5	13	1.250
BP008013519M0	13,5	19	1.250
BP008013525M0	13,5	25	1.250
BP008013813M0	13,8	13	1.250
BP008013819M0	13,8	19	1.250
BP008013825M0	13,8	25	1.250
BP008014313M0	14,3	13	1.250
BP008014319M0	14,3	19	1.250
BP008014325M0	14,3	25	1.250
BP008015213M0	15,2	13	1.250
BP008015219M0	15,2	19	1.250
BP008015225M0	15,2	25	1.250
BP008015913M0	15,9	13	1.250
BP008015919M0	15,9	19	1.250
BP008015925M0	15,9	25	1.250
BP008017413M0	17,4	13	1.250
BP008017419M0	17,4	19	1.000
BP008017425M0	17,4	25	1.250
BP008019113M0	19,1	13	1.250
BP008019119M0	19,1	19	1.250
BP008019125M0	19,1	25	1.250
BP008019913M0	19,9	13	1.250
BP008019919M0	19,9	19	1.250
BP008019925M0	19,9	25	1.250
BP008020613M0	20,6	13	1.250
BP008020625M0	20,6	25	1.250

MATERIAL
PVC (Polyvinyl chloride)

COLOUR
N5 Black RAL 9005

NOTES
Available in other colours and dimensions.

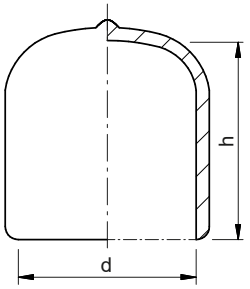

Code N5	d	h	Package (pcs)
BP008020638M0	20,6	38	1.000
BP008021413M0	21,4	13	1.250
BP008021425M0	21,4	25	1.250
BP008021438M0	21,4	38	1.200
BP008022213M0	22,2	13	1.250
BP008022225M0	22,2	25	1.250
BP008022238M0	22,2	38	1.250
BP008023813M0	23,8	13	1.250
BP008023825M0	23,8	25	1.250
BP008023838M0	23,8	38	1.000
BP008024613M0	24,6	13	1.250
BP008024625M0	24,6	25	1.000
BP008024638M0	24,6	38	1.000
BP008025413M0	25,4	13	1.250
BP008025425M0	25,4	25	1.000
BP008025438M0	25,4	38	1.250
BP008026313M0	26,3	13	1.250
BP008026325M0	26,3	25	1.250
BP008026338M0	26,3	38	1.000
BP008026913M0	26,9	13	1.500
BP008026925M0	26,9	25	1.500
BP008026938M0	26,9	38	1.250
BP008028625M0	28,6	25	1.000
BP008028638M0	28,6	38	500
BP008028650M0	28,6	50	500
BP008030225M0	30,2	25	1.000
BP008030238M0	30,2	38	1.000
BP008030250M0	30,2	50	750
BP008031825M0	31,8	25	1.000
BP008031838M0	31,8	38	700
BP008031850M0	31,8	50	750
BP008034925M0	34,9	25	1.000
BP008034938M0	34,9	38	650
BP008034950M0	34,9	50	500
BP008038125M0	38,1	25	1.000
BP008038138M0	38,1	38	600
BP008038150M0	38,1	50	500
BP008041325M0	41,3	25	900
BP008041338M0	41,3	38	500
BP008041350M0	41,3	50	400
BP008044525M0	44,5	25	500
BP008044538M0	44,5	38	500

MATERIAL
PVC (Polyvinyl chloride)

COLOUR
N5 Black RAL 9005

NOTES
Available in other colours and dimensions.

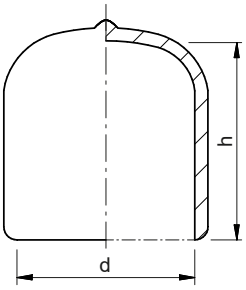

Code N5	d	h	Package (pcs)
BP008044550M0	44,5	50	400
BP008047625M0	47,6	25	625
BP008047638M0	47,6	38	400
BP008047650M0	47,6	50	350
BP008050825M0	50,8	25	550
BP008050838M0	50,8	38	400
BP008050850M0	50,8	50	200
BP008053938M0	53,9	38	400
BP008053950M0	53,9	50	200
BP008057238M0	57,2	38	250
BP008057250M0	57,2	50	200
BP008060338M0	60,3	38	250
BP008060350M0	60,3	50	250
BP008063538M0	63,5	38	250
BP008063550M0	63,5	50	125
BP008066738M0	66,7	38	150
BP008066750M0	66,7	50	125
BP008069838M0	69,8	38	250
BP008069850M0	69,8	50	200
BP008076238M0	76,2	38	200
BP008076250M0	76,2	50	150

MATERIAL
PE-LD (Low density polyethylene)

COLOUR
G6 Yellow RAL 1016

NOTES
Available in other colours and with customized head.

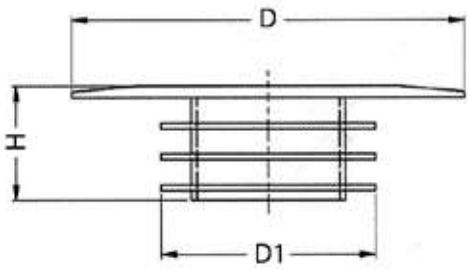

Code G6	Use		D1	D	H	Package (pcs)
	DN	ANSI				
BP046015000J4	DN 15	1/2"	19	45	16,5	500
BP046020000J4	DN 20	3/4"	24	58	16,5	500
BP046025000J4	DN 25	1"	30	70	19,5	500
BP046032000J4	DN 32	1.1/4"	39	78	29,5	500
BP046040000J4	DN 40	1.1/2"	45	88	29,5	400
BP046050000J4	DN 50	2"	56	102	29,5	200
BP046065000J4	DN 65	2.1/2"	72	122	34,5	200
BP046080000J4	DN 80	3"	85	138	34,5	150
BP046100000J4	DN 100	4"	119	163	36,5	100
BP046125000J4	DN 125	5"	143	190	36,5	100
BP046150000J4	DN 150	6"	170	215	36,5	50
BP046200000J4	DN 200	8"	221	270	41,5	30
BP046250000J4	DN 250	10"	275	345	41,5	20
BP046300000J4	DN 300	12"	325	408	41,5	10

MATERIAL
PE-LD (Low density polyethylene)

COLOUR
G6 Yellow RAL 1016

NOTES
Available in other colours and with customized head.

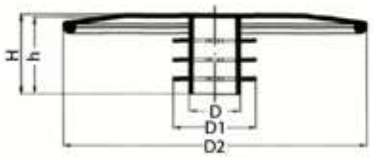

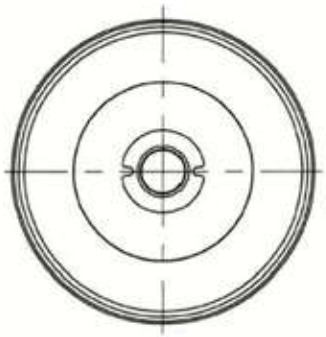

Code G6	Use		D	D1	D2	H	h	Package (pcs)
	DN	ANSI						
BP045010000J4	DN 10	3/8''	6,8	14,2	86	21	20	800
BP045015000J4	DN 15	1/2"	8,5	19	90	21	20	500
BP045020000J4	DN 20	3/4"	13	24	100	21	20	350
BP045025000J4	DN 25	1"	18	30	110	25	24	300
BP045032000J4	DN 32	1.1/4"	23	39	136	32	30	200
BP045040000J4	DN 40	1.1/2"	30	45,5	146	32	30	200
BP045050000J4	DN 50	2"	40	56,5	160	32	30	100
BP045065000J4	DN 65	2.1/2"	53	72,5	180	36	34	80
BP045080000J4	DN 80	3"	66	85,5	196	36	34	75
BP045100000J4	DN 100	4"	86	110	216	46	44	50
BP045125000J4	DN 125	5"	110	134	246	46	44	35
BP045150000J4	DN 150	6"	139	163	280	50	48	25
BP045200000J4	DN 200	8"	186	210	336	52	50	16
BP045250000J4	DN 250	10"	237	263	403	52	50	7
BP045300000J4	DN 300	12"	284	319	450	57	55	28
BP045350000J4	DN 350	14''	295	340	465	47	45	35
BP045400000J4	DN 400	16''	382	410	540	47	45	25
BP045450000J4	DN 450	18"	382	445	540	47	45	25

MATERIAL
SBR (Styrene butadiene rubber) + adhesive

COLOUR
N5 Black RAL 9005

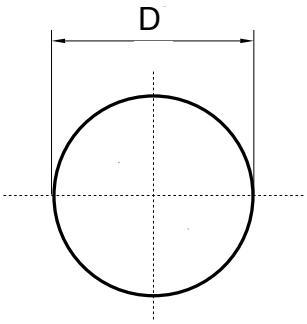

Code N5	Use ANSI / DN	Pressure series (bar)	D	Package (pcs)
BP117001200M0	1/2"	-	36	1
BP117003400M0	3/4"	-	45	1
BP117010000M0	1"	-	54	1
BP117020000M0	2"	-	95	1
BP117030000M0	3"	-	130	1
BP117040000M0	4"	-	160	1
BP117050000M0	5"	-	200	1
BP117060000M0	6"	-	220	1
BP117080000M0	8"	-	275	1
BP117100000M0	10"	-	330	1
BP117120000M0	12"	-	390	1
BP117140000M0	14"	-	415	1
BP117160000M0	16"	-	475	1
BP117180000M0	18"	-	540	1
BP117200000M0	20"	-	590	1
BP117240000M0	24"	-	700	1
BP117DN0100M0	DN 10	6, 10, 16, 25, 40, 64	40	1
BP117DN0150M0	DN 15	6, 10, 16, 25, 40, 64	45	1
BP117DN0200M0	DN 20	6, 10, 16, 25, 40, 64	58	1
BP117DN0250M0	DN 25	6, 10, 16, 25, 40, 64	68	1
BP117DN0320M0	DN 32	6, 10, 16, 25, 40, 64	78	1
BP117DN0400M0	DN 40	6, 10, 16, 25, 40, 64	88	1
BP117DN0500M0	DN 50	6, 10, 16, 25, 40, 64	102	1
BP117DN0650M0	DN 65	6, 10, 16, 25, 40, 64	122	1
BP117DN0800M0	DN 80	6, 10, 16, 25, 40, 64	138	1
BP117DN1000M0	DN 100	6, 10, 16, 25, 40, 64	158	1
BP117DN1250M0	DN 125	6, 10, 16, 25, 40, 64, 100, 160	188	1
BP117DN1500M0	DN 150	6, 10, 16, 25, 40, 64, 100, 160	212	1
BP117DN2000M0	DN 200	6, 10, 16, 25, 40, 64, 100, 160	268	1

MATERIAL
PE-LD (Low density polyethylene)

COLOUR
G6 Yellow RAL 1016

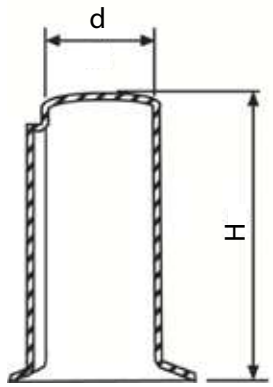

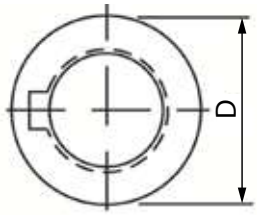

Code G6	d	D	H	Package (pcs)
BP093009000J4	9	14,5	25	500
BP093010000J4	10	16	30	500
BP093011000J4	11	17,5	30	500
BP093014000J4	14	22,5	35	500
BP093015000J4	15	25,5	35	500
BP093016000J4	16	25,5	50	500
BP093019000J4	19	30,5	50	500
BP093020000J4	20	32,5	60	250
BP093022000J4	22	35,5	60	250
BP093024000J4	24	38,5	60	200
BP093025000J4	25	40	70	200
BP093028000J4	28	45	70	200
BP093030000J4	30	48	95	100
BP093032000J4	32	51	95	100
BP093035000J4	35	56	95	100
BP093038000J4	38	61	95	100
BP093042000J4	42	67	130	75
BP093045000J4	45	72	130	75
BP093048000J4	48	77	130	100
BP093055000J4	55	88	130	100
BP093060000J4	60	96	165	25
BP093065000J4	65	104	165	75
BP093070000J4	70	108	165	75
BP093075000J4	75	112	165	75

MATERIAL
TPE (Vulcanized Elastomer)

COLOUR
R0 Red RAL 3000
B7 Blue RAL 5017
V2 Green RAL 6032
G6 Yellow RAL 1016

OPERATING TEMPERATURE
135°C max

NOTES
Available in other colours.

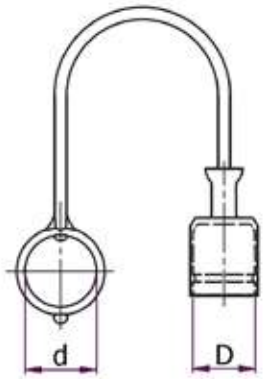

Code R0	Code B7	Code V2	Code G6	Use male coupling GAS	Type	D	d	Package (pcs)
BP030A00104L9	BP030A00104J5	BP030A00104J9	BP030A00104J4	1/4”	ISO A	12,7	20	150
BP030A00308L9	BP030A00308J5	BP030A00308J9	BP030A00308J4	3/8”	ISO A	18,3	25	150
BP030A00102L9	BP030A00102J5	BP030A00102J9	BP030A00102J4	1/2”	ISO A	24,3	28	150
BP030A00304L9	BP030A00304J5	BP030A00304J9	BP030A00304J4	3/4”	ISO A	30,7	35	150
BP030A01000L9	BP030A01000J5	BP030A01000J9	BP030A01000J4	1”	ISO A	36,5	42	150
BP030B00104L9	BP030B00104J5	BP030B00104J9	BP030B00104J4	1/4”	ISO B	15,5	20	150
BP030B00308L9	BP030B00308J5	BP030B00308J9	BP030B00308J4	3/8”	ISO B	20	23	150
BP030B00102L9	BP030B00102J5	BP030B00102J9	BP030B00102J4	1/2”	ISO B	25,7	28	150
BP030B00304L9	BP030B00304J5	BP030B00304J9	BP030B00304J4	3/4”	ISO B	32,7	34	150
BP030B01000L9	BP030B01000J5	BP030B01000J9	BP030B01000J4	1”	ISO B	40,5	43	150

CAP FOR QUICK COUPLINGS
male
BP056

MATERIAL
TPE (Vulcanized Elastomer)

COLOUR
R0 Red RAL 3000
B7 Blue RAL 5017
V2 Green RAL 6032
G6 Yellow RAL 1016

OPERATING TEMPERATURE
135°C max

NOTES
Available in other colours.

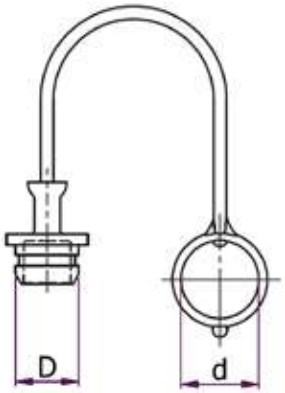

Code R0	Code B7	Code V2	Code G6	Use female coupling GAS	Type	D	d	Package (pcs)
BP056A00104L9	BP056A00104J5	BP056A00104J9	BP056A00104J4	1/4”	ISO A	12,7	19,6	150
BP056A00308L9	BP056A00308J5	BP056A00308J9	BP056A00308J4	3/8”	ISO A	18,3	25	150
BP056A00102L9	BP056A00102J5	BP056A00102J9	BP056A00102J4	1/2”	ISO A	23,6	31	150
BP056A00304L9	BP056A00304J5	BP056A00304J9	BP056A00304J4	3/4”	ISO A	29,2	36	150
BP056A01000L9	BP056A01000J5	BP056A01000J9	BP056A01000J4	1”	ISO A	36,5	48	150
BP056B00104L9	BP056B00104J5	BP056B00104J9	BP056B00104J4	1/4”	ISO B	15,5	22,2	150
BP056B00308L9	BP056B00308J5	BP056B00308J9	BP056B00308J4	3/8”	ISO B	20	28	150
BP056B00102L9	BP056B00102J5	BP056B00102J9	BP056B00102J4	1/2”	ISO B	25,7	35	150
BP056B00304L9	BP056B00304J5	BP056B00304J9	BP056B00304J4	3/4”	ISO B	32,7	42	150
BP056B01000L9	BP056B01000J5	BP056B01000J9	BP056B01000J4	1”	ISO B	40,5	51	150

MATERIAL - COLOUR
PE-LD (Low density polyethylene)
TPE (Vulcanized Elastomer)

COLOUR
R0 Red RAL 3000
N5 Black RAL 9005

NOTES
Available in other colours.

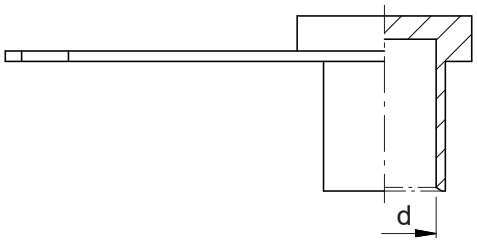

Code PE-LD R0	Code TPE N5	d	Tab	Package (pcs)
BP022006000L9	**BP022006T00M0**	6	No	10.000
BP022006L00L9	**BP022006TL0M0**	6	Si	10.000

MATERIAL
PE-LD (Low density polyethylene)

COLOUR
N5 Black RAL 9005

NOTES
Available in other colours.

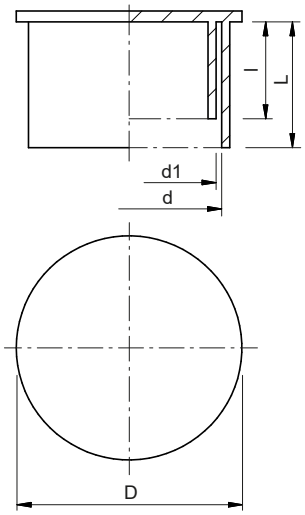

Code N5	d	d1	D	L	l	Package (pcs)
BP152018000M0	18	14	24,4	13,8	10,2	2500

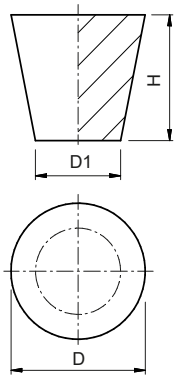

MATERIAL
SI (Silicon)

COLOUR
(NA) Natural

OPERATING TEMPERATURE
315°C max

Code (NA)	D	D1	H	Use female thread			Package (pcs)
				Metric	UNF	GAS	
BP11200161500	1,6	0,4	15,9	-	-	-	1.000
BP11200201900	2	0,5	19,1	M2	-	-	1.000
BP11200321500	3,2	0,8	15,9	M2	-	-	1.000
BP11200321600	3,2	1,6	15,9	M3	-	-	1.000
BP11200481500	4,8	1,6	15,9	M3 - M4	-	-	1.000
BP11200481900	4,8	1,6	19,1	M3 - M4	-	-	1.000
BP11200553800	5,5	1,2	38,1	M3 - M4 - M5	-	-	1.000
BP11200641900	6,4	3,2	19,1	M5 - M6	1/4"	-	1.000
BP11200642500	6,4	3,2	25,4	M5 - M6	1/4"	-	1.000
BP11200871500	8,7	4,8	15,9	M7 - M8	5/8"	1/16"	1.000
BP11200872500	8,7	4,8	25,4	M7 - M8	5/8"	1/16"	1.000
BP11200951200	9,5	6,4	12,7	M10	3/8"	1/8"	100
BP11200951900	9,5	6,4	19,1	M10	3/8"	1/8"	100
BP11201111700	11,1	8,7	17,5	M12	7/16"	-	100
BP11201112500	11,1	6,4	25,4	M10 - M12	3/8"	1/8"	500
BP11201192000	11,9	8,7	20,6	M12	7/16"	-	500
BP11201432800	14,3	7,9	28,6	M10 - M12 - M14	7/16" - 1/2" - 9/16"	1/4"	100
BP11201432500	14,3	7,9	25,4	M10 - M12 - M14	7/16" - 1/2" - 9/16"	1/4"	100
BP11201512500	15,1	10,3	25,4	M14 - M16	1/2" - 9/16"	-	100
BP11201592200	15,9	11,1	22,2	M14 - M16	9/16" - 5/8"	3/8"	100
BP11201672500	16,7	12,7	25,4	M16	5/8"	3/8"	200
BP11201752500	17,5	11,1	25,4	M14 - M16 - M18	5/8"	3/8"	100
BP11201911400	19,1	14,3	14,3	M18 - M20	3/4"	-	100
BP11201912500	19,1	14,3	25,4	M18 - M20	3/4"	-	100
BP11201982500	19,8	15,9	25,4	M20	3/4"	1/2"	100
BP11202031500	20,3	15,9	15,9	M20 - M22	3/4"	1/2"	100
BP11202351900	23,5	19,1	19,1	M22 - M24	7/8"	-	100
BP11202382500	23,8	18,3	25,4	M22 - M24	7/8"	-	100
BP11202542500	25,4	19,8	25,4	M22 - M24	1"	3/4"	100
BP11202702500	27	23	25	M27	-	-	100
BP11202792500	27,9	23,8	25,4	M30	1.1/8"	-	100
BP11203182500	31,8	26,2	25,4	M33	1.1/4"	-	100
BP11203342500	33,4	27	25,4	M33	1.1/4" - 1.3/8"	1"	100
BP11203652500	36,5	30,2	25,4	M36	1.3/8"	-	100
BP11203892500	38,9	31,8	25,4	M39	1.1/2"	-	100
BP11204132500	41,3	33,3	25,4	M39 - M42	1.1/2"	1.1/4"	100
BP11204292500	42,9	35,7	25,4	M42	-	1.1/4"	100
BP11204452500	44,5	37,3	25,4	M48	-	-	100
BP11204602500	46	38,1	25,4	M48	-	1.1/2"	100
BP11205002500	50	41,3	25,4	-	-	1.1/2"	50
BP11205242500	52,4	44,5	25,4	M56	-	-	50
BP11205602500	56	47,6	25,4	M56	-	-	50
BP11206272500	62,7	50	25,4	M64	-	2"	50
BP11206352500	63,5	54	25,4	M64	-	2"	50
BP11206832500	68,3	57,9	25,4	-	-	-	50
BP11207503400	75	61,9	34,9	-	-	2.1/2"	50
BP11208893800	88,9	76,2	38,1	-	-	3"	10
BP11210163800	101,6	82,6	38,1	-	-	-	10
BP11212705000	127	88,9	50,8	-	-	4"	5

MATERIAL
SI (Silicon)

COLOUR
(NA) Natural

OPERATING TEMPERATURE
315°C max

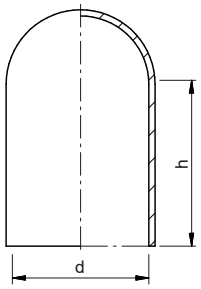

Code (NA)	d	h	Use male thread			Package (pcs)
			Metric	UNF	GAS	
BP10600501200	0.5	12.7	-	-	-	1.000
BP10601601900	1.6	19.1	-	1/16"	-	1.000
BP10601802500	1.8	25.4	-	-	-	1.000
BP10602401900	2.4	19.1	-	-	-	1.000
BP10602402500	2.4	25.4	-	-	-	1.000
BP10602501200	2.5	12.7	-	-	-	1.000
BP10602502500	2.5	25.4	-	-	-	1.000
BP10602801900	2.8	19.1	M3	-	-	1.000
BP10602802500	2.8	25.4	M3	-	-	1.000
BP10603201200	3.2	12.7	-	-	-	1.000
BP10603202500	3.2	25.4	-	-	-	1.000
BP10603501200	3.5	12.7	-	-	-	500
BP10603502500	3.5	25.4	-	-	-	1.000
BP10603801900	3.8	19.1	M4	-	-	500
BP10603802500	3.8	25.4	M4	-	-	250
BP10604001200	4	12.7	M4	-	-	250
BP10604002500	4	25.4	M4	-	-	1.000
BP10604003800	4	38.1	M4	-	-	250
BP10604401200	4.4	12.7	-	3/16"	-	250
BP10604402500	4.4	25.4	-	3/16"	-	1.000
BP10604403800	4.4	38.1	-	3/16"	-	250
BP10604602500	4.6	25.4	-	3/16"	-	250
BP10604801200	4.8	12.7	M5	-	-	250
BP10604802500	4.8	25.4	M5	-	-	1.000
BP10605502500	5.5	25.4	-	-	-	250
BP10605701200	5.7	12.7	M6	-	-	250
BP10605702500	5.7	25.4	M6	-	-	250
BP10605703800	5.7	38.1	M6	-	-	250
BP10605901200	5.9	12.7	M6	-	-	250
BP10605902500	5.9	25.4	M6	-	-	1.000
BP10605903800	5.9	38.1	-	-	-	250
BP10606402500	6.4	25.4	-	-	-	1.000
BP10606403800	6.4	38.1	-	-	-	250
BP10607101200	7.1	12.7	-	5/16"		250
BP10607102500	7.1	25.4	-	5/16"	-	1.000
BP10607503800	7.5	38.1	M8	5/16"	-	250
BP10607902500	7.9	25.4	M8	-	-	1.000
BP10607903800	7.9	38.1	M8	-	-	1.000
BP10608702500	8.7	25.4	M8	-	-	250
BP10609003800	9	38.1	-	-	-	250
BP10609501200	9.5	12.7	M10	-	-	250
BP10609501900	9.5	19.1	M10	-	-	250
BP10609502500	9.5	25.4	M10	-	-	1.000
BP10609503800	9.5	38.1	M10	-	-	250
BP10610302500	10.3	25.4	-	-	-	250
BP10611102500	11.1	25.4	-	7/16"	-	200
BP10611602500	11.6	25.4	-	-	-	100
BP10611603800	11.6	38.1	M12	-	-	100

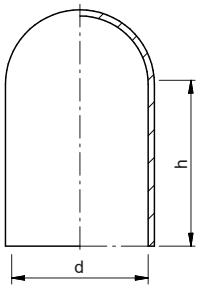

MATERIAL
SI (Silicon)

COLOUR
(NA) Natural

OPERATING TEMPERATURE
315°C max

Code (NA)	d	h	Use male thread			Package (pcs)
			Metric	UNF	GAS	
BP10611902500	11.9	25.4	M12	1/2"		200
BP10612203800	12.2	38.1	-	1/2"	-	100
BP10612703800	12.7	38.1	-	1/2"	1/4"	200
BP10612707600	12.7	76.2	-	1/2"	1/4"	100
BP10612710100	12.7	101.6	-	-	1/4"	100
BP10613603800	13.6	38.1	M14	-	-	500
BP10613607600	13.6	76.2	M14	-	-	100
BP10614301600	14.3	16.7	M15	-	-	100
BP10614302700	14.3	27.9	M15	-	-	100
BP10614303800	14.3	38.1	M15	-	-	200
BP10615203800	15.2	38.1	-	-	-	100
BP10615903100	15.9	31.8	M17	5/8"	3/8"	100
BP10615903800	15.9	38.1	M17	5/8"	3/8"	200
BP10615905700	15.9	57.2	M17	5/8"	3/8"	100
BP10617501500	17.5	15.9	-	-	-	100
BP10617503800	17.5	38.1	-	-	-	100
BP10617504400	17.5	44.5	-	-	-	100
BP10617506300	17.5	63.5	-	-	-	100
BP10618503800	18.5	38.1	-	-	-	100
BP10618510900	18.5	109.9	-	-	-	100
BP10619103800	19.1	38.1	M20	3/4"	-	200
BP10619104800	19.1	48.9	M20	3/4"	-	100
BP10619108800	19.1	88.9	M20	3/4"	-	100
BP10619110900	19.1	109.2	M20	3/4"	-	100
BP10620602500	20.6	25.4	M22	7/8"	1/2"	100
BP10620603800	20.6	38.1	M22	7/8"	1/2"	100
BP10621507200	21.5	72.2	M22	7/8"	-	100
BP10622203800	22.2	38.1	-	-	-	100
BP10623803800	23.8	38.1	M24	-	-	100
BP10624603800	24.6	38.1	-	-	-	100
BP10624610100	24.6	101.6	-	-	-	100
BP10625402000	25.4	20.8	M27	-	-	100
BP10625403800	25.4	38.1	M27	-	-	100
BP10625505000	25.4	50.8	M27	-	-	100
BP10627507600	27.5	76.2	-	-	-	100
BP10628603800	28.6	38.1	M30	-	-	100
BP10630105900	30.1	59	-	-	-	100
BP10631803800	31.8	38.1	M33	1.1/4"	1"	100
BP10638102500	38.1	25.4	-	1.1/2"	-	100
BP10638103800	38.1	38.1	-	1.1/2"	-	100
BP10638104400	38.1	44.5	-	1.1/2"	-	100
BP10641305000	41.3	50.8	-	-	1.1/4"	50
BP10644503800	44.5	38.1	-	1.3/4"	-	50
BP10644505000	44.5	50.8	-	1.3/4"	-	50
BP10647605000	47.6	50.8	-	-	1.1/2"	50
BP10650805000	50.8	50.8	-	-	-	50
BP10653505000	53.5	50.8	-	-	-	50

MATERIAL
SI (Silicon)

COLOUR
R5 Pink RAL 3015
N5 Black RAL 9005
R0 Red RAL 3000
G8 Yellow RAL 1018
V3 Green RAL 6033
G3 Grey RAL 7033
B5 Blue RAL 5005
NA Natural

OPERATING TEMPERATURE
315°C max

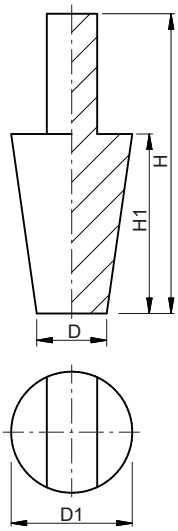

Code	Colour	D	D1	H1	H	Package (pcs)
BP107001600N0	R5	1,6	4,8	15,9	25,4	1.000
BP107003200M0	N5	3,2	6,4	19,1	31,8	1.000
BP107004800L9	R0	4,8	8,7	15,9	28,7	1.000
BP107006431N6	G8	6,4	9,5	19	31,8	100
BP107011300P9	V3	11,1	15,9	22,5	41	100
BP107012700N0	R5	12,7	16,7	22,2	41,3	100
BP107015900P9	V3	15,9	19,8	25,4	44,4	100
BP107018300N6	G8	18,3	23,8	25,4	44,4	100
BP107019000P8	G3	19	25,4	25,4	44,4	100
BP107023000P9	V3	23	27	25,4	44,4	100
BP107026200P9	V3	26,2	31,8	25,4	44,4	100
BP107030200P7	B5	30,2	36,5	25,4	44,4	50
BP10704130000	NA	41,3	50	25,4	44,4	25
BP107047600P7	B5	47,6	56	25,4	44,4	25

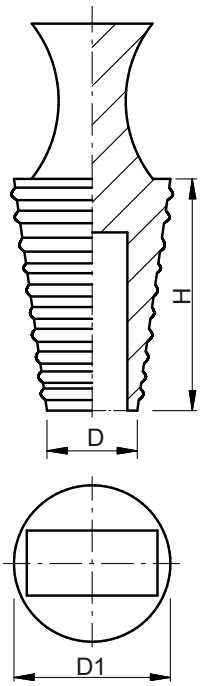

MATERIAL
SI (Silicon)

COLOUR
(NA) Natural

OPERATING TEMPERATURE
315°C max

Code (NA)	D	D1	H	Package (pcs)
BP10900400000	4	6	25,4	1.000
BP10900600000	6	8	25,4	1.000
BP10900800000	8	10	25,4	1.000
BP10901000000	10	12	25,4	500
BP10901200000	12	14	25,4	500
BP10901400000	14	16	25,4	200
BP10901600000	16	18	25,4	200
BP10901800000	18	20	25,4	200
BP10902000000	20	22,5	25,4	200
BP10902200000	22,5	24	25,4	200
BP10902400000	24	26	25,4	100
BP10902600000	26	28	25,4	100
BP10902500000	25,4	28,6	25,4	100
BP10902800000	28,6	31,8	25,4	100

MATERIAL
SI (Silicon)

COLOUR
B7 Blue RAL 5017
R0 Red RAL 3000
V2 Green RAL 6032

OPERATING TEMPERATURE
315°C max

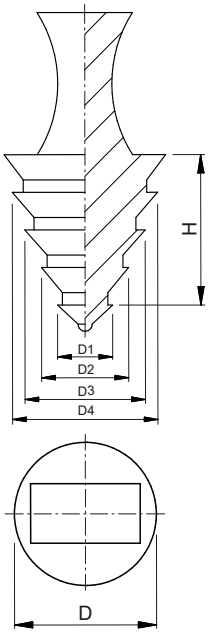

Code	Colour	D1	D2	D3	D4	D	H	Package (pcs)
BP027010000J5	B7	4,0	6,0	8,0	10,0	-	11,0	500
BP027014000L9	R0	8,0	10,0	12,0	14,0	16,0	19,5	500
BP027016000J9	V2	10,0	12,0	14,0	16,0	18,0	19,5	500

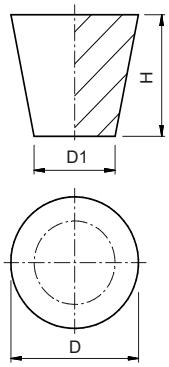

MATERIAL
EPDM (Ethylene propylene diene rubber)

COLOUR
N5 Black RAL 9005

OPERATING TEMPERATURE
177°C max

Code N5	D	D1	H	Use female thread			Package (pcs)
				Metric	UNF	GAS	
BP144002019M0	2	0,5	19,1	M2	-	-	1.000
BP144003015M0	3,2	0,8	15,9	M2	-	-	1.000
BP144003016M0	3,2	1,6	15,9	M3	-	-	1.000
BP144004015M0	4,8	1,6	15,9	M3 - M4	-	-	1.000
BP144004019M0	4,8	1,6	19,1	M3 - M4	-	-	1.000
BP144005038M0	5,5	1,2	38,1	M3 - M4 - M5	-	-	1.000
BP144006019M0	6,4	3,2	19,1	M5 - M6	1/4"	-	1.000
BP144006025M0	6,4	3,2	25,4	M5 - M6	1/4"	-	1.000
BP144008015M0	8,7	4,8	15,9	M7 - M8	5/8"	1/16"	1.000
BP144008025M0	8,7	4,8	25,4	M7 - M8	5/8"	1/16"	1.000
BP144009012M0	9,5	6,4	12,7	M10	3/8"	1/8"	100
BP144009019M0	9,5	6,4	19,1	M10	3/8"	1/8"	100
BP144011017M0	11,1	8,7	17,5	M12	7/16"	-	100
BP144011025M0	11,1	6,4	25,4	M10 - M12	3/8"	1/8"	100
BP144011020M0	11,9	8,7	20,6	M12	7/16"	-	100
BP144014028M0	14,3	7,9	28,6	M10 - M12 - M14	7/16" - 1/2" - 9/16"	1/4"	100
BP144014025M0	14,3	7,9	25,4	M10 - M12 - M14	7/16" - 1/2" - 9/16"	1/4"	100
BP144015025M0	15,1	10,3	25,4	M14 - M16	1/2" - 9/16"	-	100
BP144015022M0	15,9	11,1	22,2	M14 - M16	9/16" - 5/8"	3/8"	100
BP144016025M0	16,7	12,7	25,4	M16	5/8"	3/8"	100
BP144017025M0	17,5	11,1	25,4	M14 - M16 - M18	5/8"	3/8"	100
BP144019014M0	19,1	14,3	14,3	M18 - M20	3/4"	-	100
BP144019025M0	19,1	14,3	25,4	M18 - M20	3/4"	-	100
BP144020025M0	19,8	15,9	25,4	M20	3/4"	1/2"	100
BP144020015M0	20,3	15,9	15,9	M20 - M22	3/4"	1/2"	100
BP144023019M0	23,5	19,1	19,1	M22 - M24	7/8"	-	100
BP144023025M0	23,8	18,3	25,4	M22 - M24	7/8"	-	100
BP144025025M0	25,4	19,8	25,4	M24 - M27	1"	3/4"	100
BP144027025M0	27	23	25,4	M27	-	-	100
BP144028025M0	27,9	23,8	25,4	M30	1.1/8"	-	100
BP144031025M0	31,8	26,2	25,4	M33	1.1/4"	-	100
BP144033025M0	33,4	27	25,4	M33	1.1/4" - 1.3/8"	1"	100
BP144036025M0	36,5	30,2	25,4	M36	1.3/8"	-	100
BP144038025M0	38,9	31,8	25,4	M39	1.1/2"	-	100
BP144041025M0	41,3	33,3	25,4	M39 - M42	1.1/2"	1.1/4"	100
BP144042025M0	42,9	35,7	25,4	M42	-	1.1/4"	100
BP144044025M0	44,5	37,3	25,4	M48	-	-	100
BP144046025M0	46	38,1	25,4	M48	-	1.1/2"	100
BP144050025M0	50	41,3	25,4	-	-	1.1/2"	50
BP144052025M0	52,4	44,5	25,4	M56	-	-	50
BP144056025M0	56	47,6	25,4	M56	-	-	50
BP144062025M0	62,7	50	25,4	M64	-	2"	50
BP144063025M0	63,5	54	25,4	M64	-	2"	50
BP144068025M0	68,3	57,9	25,4	-	-	-	50
BP144075034M0	75	61,9	34,9	-	-	2.1/2"	50
BP144088038M0	88,9	76,2	38,1	-	-	3"	10
BP144101038M0	101,6	82,6	38,1	-	-	-	10
BP144127050M0	127	88,9	50,8	-	-	4"	5

MATERIAL
EPDM (Ethylene propylene diene rubber)

COLOUR
N5 Black RAL 9005

OPERATING TEMPERATURE
177°C max

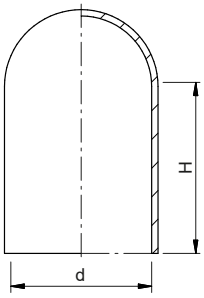

Code N5	d	H	Use male thread			Package (pcs)
			Metric	UNF	GAS	
BP015005127M0	0,5	12,7	-	-	-	1.000
BP015016191M0	1,6	19,1	-	1/16"	-	1.000
BP015018254M0	1,8	25,4	-	1/16"	-	1.000
BP015024191M0	2,4	19,1	-	-	-	1.000
BP015024254M0	2,4	25,4	-	-	-	1.000
BP015025127M0	2,5	12,7	-	-	-	1.000
BP015025254M0	2,5	25,4	-	-	-	1.000
BP015028191M0	2,8	19,1	M3	-	-	1.000
BP015028254M0	2,8	25,4	M3	-	-	1.000
BP015032127M0	3,2	12,7	-	-	-	1.000
BP015032254M0	3,2	25,4	-	-	-	1.000
BP015035127M0	3,5	12,7	-	-	-	500
BP015035254M0	3,5	25,4	-	-	-	1.000
BP015038191M0	3,8	19,1	M4	-	-	500
BP015038254M0	3,8	25,4	M4	-	-	250
BP015040127M0	4	12,7	M4	-	-	250
BP015040254M0	4	25,4	M4	-	-	1.000
BP015040381M0	4	38,1	M4	-	-	250
BP015044127M0	4,4	12,7	-	3/16"	-	250
BP015044254M0	4,4	25,4	-	3/16"	-	1.000
BP015044381M0	4,4	38,1	-	3/16"	-	250
BP015046254M0	4,6	25,4	-	3/16"	-	250
BP015048127M0	4,8	12,7	M5	-	-	250
BP015048254M0	4,8	25,4	M5	-	-	1.000
BP015055254M0	5,5	25,4	-	-	-	250
BP015057127M0	5,7	12,7	M6	-	-	250
BP015057254M0	5,7	25,4	M6	-	-	250
BP015057381M0	5,7	38,1	M6	-	-	250
BP015059127M0	5,9	12,7	M6	1/4"	-	250
BP015059254M0	5,9	25,4	M6	1/4"	-	1.000
BP015059381M0	5,9	38,1	M6	1/4"	-	250
BP015064254M0	6,4	25,4	-	-	-	1.000
BP015064381M0	6,4	38,1	-	-	-	250
BP015071127M0	7,1	12,7	-	5/16"	-	250
BP015071254M0	7,1	25,4	-	5/16"	-	1.000
BP015075381M0	7,5	38,1	M8	5/16"	1/16"	250
BP015079254M0	7,9	25,4	M8	-	-	1.000
BP015079381M0	7,9	38,1	M8	-	-	250
BP015087254M0	8,7	25,4	-	-	-	250
BP015090381M0	9	38,1	-	-	-	250
BP015095127M0	9,5	12,7	M10	-	1/8"	250
BP015095191M0	9,5	19,1	M10	-	1/8"	250
BP015095254M0	9,5	25,4	M10	-	1/8"	1.000
BP015095381M0	9,5	38,1	M10	-	1/8"	250
BP015103254M0	10,3	25,4	-	-	-	250
BP015111254M0	11,1	25,4	-	7/16"	-	200
BP015116254M0	11,6	25,4	-	-	-	100
BP015116381M0	11,6	38,1	M12	-	-	100

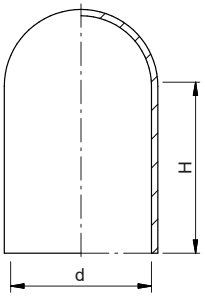

MATERIAL
EPDM (Ethylene propylene diene rubber)

COLOUR
N5 Black RAL 9005

OPERATING TEMPERATURE
177°C max

Code N5	d	H	Use male thread			Package (pcs)
			Metric	UNF	GAS	
BP015119254M0	11,9	25,4	M12	1/2"	-	200
BP015122381M0	12,2	38,1	-	1/2"	-	100
BP015127381M0	12,7	38,1	-	1/2"	1/4"	200
BP015127762M0	12,7	76,2	-	1/2"	1/4"	100
BP015127A16M0	12,7	101,6	-	1/2"	1/4"	100
BP015136381M0	13,6	38,1	M14	-	-	500
BP015136762M0	13,6	76,2	M14	-	-	100
BP015143167M0	14,3	16,7	M15	-	-	100
BP015143279M0	14,3	27,9	M15	-	-	100
BP015143381M0	14,3	38,1	M15	-	-	200
BP015152381M0	15,2	38,1	-	-	-	100
BP015159318M0	15,9	31,8	M17	5/8"	3/8"	100
BP015159381M0	15,9	38,1	M17	5/8"	3/8"	200
BP015159572M0	15,9	57,2	M17	5/8"	3/8"	100
BP015175159M0	17,5	15,9	-	-	-	100
BP015175381M0	17,5	38,1	-	-	-	100
BP015175445M0	17,5	44,5	-	-	-	100
BP015175635M0	17,5	63,5	-	-	-	100
BP015185381M0	18,5	38,1	-	-	-	100
BP015185A99M0	18,5	109,9	-	-	-	100
BP015191381M0	19,1	38,1	M20	3/4"	-	200
BP015191489M0	19,1	48,9	M20	3/4"	-	100
BP015191889M0	19,1	88,9	M20	3/4"	-	100
BP015191A92M0	19,1	109,2	M20	3/4"	-	100
BP015206254M0	20,6	25,4	M22	7/8"	1/2"	100
BP015206381M0	20,6	38,1	M22	7/8"	1/2"	100
BP015215722M0	21,5	72,2	M22	7/8"	-	100
BP015222381M0	22,2	38,1	-	-	-	100
BP015238381M0	23,8	38,1	M24	-	-	100
BP015246381M0	24,6	38,1	-	-	-	100
BP015246A16M0	24,6	101,6	-	-	-	100
BP015254208M0	25,4	20,8	M27	1"	-	100
BP015254381M0	25,4	38,1	M27	1"	-	100
BP015255508M0	25,4	50,8	M27	1"	-	100
BP015275762M0	27,5	76,2	-	-	-	100
BP015286381M0	28,6	38,1	M30	-	-	100
BP015301590M0	30,1	59	-	-	-	100
BP015318381M0	31,8	38,1	M33	1.1/4"	1"	100
BP015381254M0	38,1	25,4	M39	1.1/2"	-	100
BP015381381M0	38,1	38,1	M39	1.1/2"	-	100
BP015381445M0	38,1	44,5	M39	1.1/2"	-	100
BP015413508M0	41,3	50,8	-	-	1.1/4"	50
BP015445381M0	44,5	38,1	-	1.3/4"	-	50
BP015445508M0	44,5	50,8	-	1.3/4"	-	50
BP015476508M0	47,6	50,8	-	-	1.1/2"	50
BP015508508M0	50,8	50,8	-	-	-	50

6

ANTI-VIBRATION MOUNTS

Cylindrical anti-vibration mounts
page 6.1

Parabolic anti-vibration mounts
page 6.11

Waisted anti-vibration mounts
page 6.13

Bell-shaped anti-vibration mounts
page 6.16

CYLINDRICAL ANTI-VIBRATION MOUNT

male - male

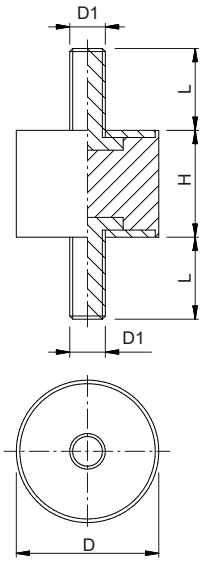

STANDARD
DIN 95363/A

MATERIAL - SURFACE TREATMENT

Body:	NR (Natural rubber)
Pin:	Cl 4.8 (Steel) white galvanized
Washer:	DD11 (Steel) white galvanized

COLOUR
NE Black

RUBBER HARDNESS
60 Shore A (±5)

OPERATING TEMPERATURE
-50°C ÷ 80°C

NOTES
* Indicates the maximum load that can be supported before its functionality is compromised. The load must be compressive - avoid applying traction.
** Indicates the height variation of the rubber under maximum load.

Available in other materials, hardnesses, dimensions, and colours.

Code NE	D (±1)	H (±1)	D1	L (±1)	Max load (daN) *	Deflection (mm) **	Package (pcs)
AF16006070310	6	7	M3	10	2	1,05	100
AF16010100415	10	10	M4	15	10	1,50	50
AF16010100515	10	10	M5	15	10	1,50	50
AF16015100415	15	10	M4	15	17	1,50	50
AF16015100515	15	10	M5	15	17	1,50	50
AF16015150415	15	15	M4	15	17	2,25	50
AF16015150515	15	15	M5	15	17	2,25	50
AF16015200415	15	20	M4	15	17	3	50
AF16015200515	15	20	M5	15	17	3	50
AF16020090618	20	9	M6	18	34	1,35	50
AF16020100618	20	10	M6	18	34	1,50	50
AF16020150618	20	15	M6	18	32	2,25	50
AF16020200618	20	20	M6	18	32	3	50
AF16020250618	20	25	M6	18	32	3,75	50
AF16020300618	20	30	M6	18	30	4,50	50
AF16025100623	25	10	M6	23	40	1,50	50
AF16025150623	25	15	M6	23	35	2,25	50
AF16025170623	25	17	M6	23	35	2,55	50
AF16025200623	25	20	M6	23	33	3	50
AF16025250623	25	25	M6	23	33	3,75	50
AF16025300623	25	30	M6	23	32	4,50	50
AF16025400623	25	40	M6	23	25	6	50
AF16030100823	30	10	M8	23	68	1,50	25
AF16030150823	30	15	M8	23	68	2,25	25
AF16030200823	30	20	M8	23	68	3	25
AF16030250823	30	25	M8	23	64	3,75	25
AF16030300823	30	30	M8	23	58	4,50	25
AF16030400823	30	40	M8	23	48	6	25
AF16030500823	30	50	M8	23	40	7,50	25
AF16040150823	40	15	M8	23	115	2,25	25
AF16040151028	40	15	M10	28	115	2,25	25
AF16040200823	40	20	M8	23	103	3	25
AF16040201028	40	20	M10	28	103	3	25
AF16040250823	40	25	M8	23	100	3,75	25
AF16040251028	40	25	M10	28	100	3,75	25
AF16040300823	40	30	M8	23	96	4,50	25
AF16040301028	40	30	M10	28	96	4,50	25
AF16040350823	40	35	M8	23	96	5,25	25
AF16040351028	40	35	M10	28	96	5,25	25
AF16040400823	40	40	M8	23	91	6	25

STANDARD
DIN 95363/A

MATERIAL - SURFACE TREATMENT
Body: NR (Natural rubber)
Pin: CI 4.8 (Steel) white galvanized
Washer: DD11 (Steel) white galvanized

COLOUR
NE Black

RUBBER HARDNESS
60 Shore A (±5)

OPERATING TEMPERATURE
-50°C ÷ 80°C

NOTES
* Indicates the maximum load that can be supported before its functionality is compromised. The load must be compressive - avoid applying traction.
** Indicates the height variation of the rubber under maximum load.

Available in other materials, hardnesses, dimensions, and colours.

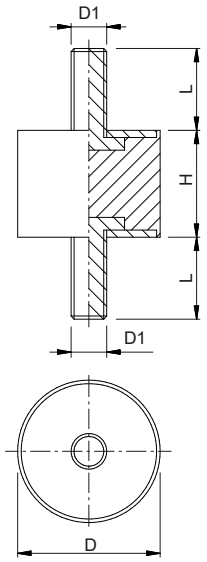

Code NE	D (±1)	H (±1)	D1	L (±1)	Max load (daN) *	Deflection (mm) **	Package (pcs)
AF16040401028	40	40	M10	28	91	6	25
AF16040500823	40	50	M8	23	80	7,50	25
AF16040501028	40	50	M10	28	80	7,50	25
AF16050151028	50	15	M10	28	180	2,25	25
AF16050201028	50	20	M10	28	168	3	25
AF16050251028	50	25	M10	28	144	3,75	25
AF16050301028	50	30	M10	28	140	4,50	25
AF16050401028	50	40	M10	28	135	6	25
AF16050451028	50	45	M10	28	130	6,75	25
AF16050501028	50	50	M10	28	126	7,50	25
AF16060201237	60	20	M12	37	220	3	10
AF16060251237	60	25	M12	37	213	3,75	10
AF16060301237	60	30	M12	37	209	4,50	10
AF16060401237	60	40	M12	37	198	6	10
AF16060451237	60	45	M12	37	198	6,75	10
AF16060501237	60	50	M12	37	198	7,50	10
AF16075251237	75	25	M12	37	304	3,75	10
AF16075301237	75	30	M12	37	297	4,50	10
AF16075401237	75	40	M12	37	283	6	10
AF16075451237	75	45	M12	37	275	6,75	10
AF16075501237	75	50	M12	37	229	7,50	10
AF16075551237	75	55	M12	37	204	8,25	10
AF160A0251647	100	25	M16	47	620	3,75	5
AF160A0301647	100	30	M16	47	610	4,50	5
AF160A0401647	100	40	M16	47	594	6	5
AF160A0451647	100	45	M16	47	594	6,75	5
AF160A0501647	100	50	M16	47	585	7,50	5
AF160A0551647	100	55	M16	47	577	8,25	5
AF160A0601647	100	60	M16	47	570	9	5
AF160A0A01647	100	100	M16	47	550	15	5
AF160C5551647	125	55	M16	47	736	8,25	5
AF160C5751647	125	75	M16	47	736	11,25	5
AF160C5A01647	125	100	M16	47	723	15	5
AF160C5C51647	125	125	M16	47	700	18,75	5
AF160F0502047	150	50	M20	47	1100	7,50	5
AF160F0752047	150	75	M20	47	1030	11,25	5
AF160F0A02047	150	100	M20	47	969	15	5
AF160F0F02047	150	150	M20	47	949	22,50	5
AF160K0A02447	200	100	M24	47	1800	15	1

CYLINDRICAL ANTI-VIBRATION MOUNT

male - female

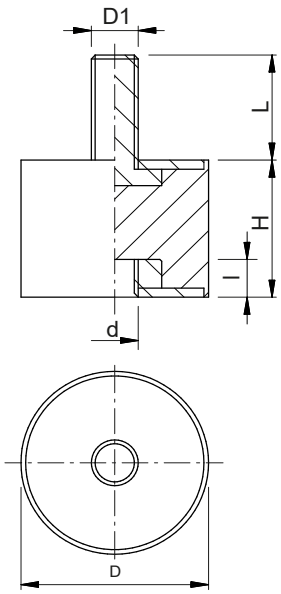

STANDARD
DIN 95363/B

MATERIAL - SURFACE TREATMENT

Body:	NR (Natural rubber)
Pin:	Cl 4.8 (Steel) white galvanized
Washer:	DD11 (Steel) white galvanized
Bushing:	Cl 4 (Steel) white galvanized

COLOUR
NE Black

RUBBER HARDNESS
60 Shore A (±5)

OPERATING TEMPERATURE
-50°C ÷ 80°C

NOTES
* Indicates the maximum load that can be supported before its functionality is compromised. The load must be compressive - avoid applying traction.
** Indicates the height variation of the rubber under maximum load.

Available in other materials, hardnesses, dimensions, and colours.

Code NE	D (±1)	H (±1)	D1	L (±1)	d	l (±1)	Max load (daN) *	Deflection (mm) **	Package (pcs)
AF26006070310	6	7	M3	10	M3	3	2	1,05	100
AF26010100415	10	10	M4	15	M4	4	11	1,50	50
AF26010100515	10	10	M5	15	M5	5	11	1,50	50
AF26015100415	15	10	M4	15	M4	4	20	1,50	50
AF26015100515	15	10	M5	15	M5	5	20	1,50	50
AF26015150415	15	15	M4	15	M4	4	20	2,25	50
AF26015150515	15	15	M5	15	M5	5	20	2,25	50
AF26015200415	15	20	M4	15	M4	4	19	3	50
AF26015200515	15	20	M5	15	M5	5	19	3	50
AF26020090618	20	9	M6	18	M6	6	39	1,35	50
AF26020100618	20	10	M6	18	M6	6	39	1,50	50
AF26020150618	20	15	M6	18	M6	6	38	2,25	50
AF26020200618	20	20	M6	18	M6	6	35	3	50
AF26020250618	20	25	M6	18	M6	6	34	3,75	50
AF26020300618	20	30	M6	18	M6	6	32	4,50	50
AF26025100623	25	10	M6	23	M6	6	45	1,50	50
AF26025150623	25	15	M6	23	M6	6	40	2,25	50
AF26025170623	25	17	M6	23	M6	6	40	2,55	50
AF26025200623	25	20	M6	23	M6	6	38	3	50
AF26025250623	25	25	M6	23	M6	6	37	3,75	50
AF26025300623	25	30	M6	23	M6	6	36	4,50	50
AF26025400623	25	40	M6	23	M6	6	30	6	50
AF26030100823	30	10	M8	23	M8	8	73	1,50	25
AF26030150823	30	15	M8	23	M8	8	73	2,25	25
AF26030200823	30	20	M8	23	M8	8	70	3	25
AF26030250823	30	25	M8	23	M8	8	68	3,75	25
AF26030300823	30	30	M8	23	M8	8	65	4,50	25
AF26030400823	30	40	M8	23	M8	8	63	6	25
AF26030500823	30	50	M8	23	M8	8	60	7,50	25
AF26040150823	40	15	M8	23	M8	8	130	2,25	25
AF26040151028	40	15	M10	28	M10	10	130	2,25	25
AF26040200823	40	20	M8	23	M8	8	125	3	25
AF26040201028	40	20	M10	28	M10	10	125	3	25
AF26040250823	40	25	M8	23	M8	8	120	3,75	25
AF26040251028	40	25	M10	28	M10	10	120	3,75	25
AF26040300823	40	30	M8	23	M8	8	112	4,50	25
AF26040301028	40	30	M10	28	M10	10	112	4,50	25
AF26040350823	40	35	M8	23	M8	8	117	5,25	25
AF26040351028	40	35	M10	28	M10	10	117	5,25	25
AF26040400823	40	40	M8	23	M8	8	95	6	25

STANDARD
DIN 95363/B

MATERIAL - SURFACE TREATMENT

Body:	NR (Natural rubber)
Pin:	CI 4.8 (Steel) white galvanized
Washer:	DD11 (Steel) white galvanized
Bushing:	CI 4 (Steel) white galvanized

COLOUR
NE Black

RUBBER HARDNESS
60 Shore A (±5)

OPERATING TEMPERATURE
-50°C ÷ 80°C

NOTES
* Indicates the maximum load that can be supported before its functionality is compromised. The load must be compressive - avoid applying traction.
** Indicates the height variation of the rubber under maximum load.

Available in other materials, hardnesses, dimensions, and colours.

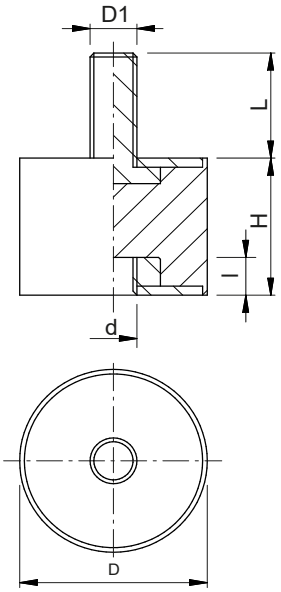

Code NE	D (±1)	H (±1)	D1	L (±1)	d	l (±1)	Max load (daN) *	Deflection (mm) **	Package (pcs)
AF26040401028	40	40	M10	28	M10	10	95	6	25
AF26040500823	40	50	M8	23	M8	8	90	7,50	25
AF26040501028	40	50	M10	28	M10	10	90	7,50	25
AF26050151028	50	15	M10	28	M10	10	200	2,25	25
AF26050201028	50	20	M10	28	M10	10	180	3	25
AF26050251028	50	25	M10	28	M10	10	167	3,75	25
AF26050301028	50	30	M10	28	M10	10	167	4,50	25
AF26050401028	50	40	M10	28	M10	10	153	6	25
AF26050451028	50	45	M10	28	M10	10	144	6,75	25
AF26050501028	50	50	M10	28	M10	10	135	7,50	25
AF26060201237	60	20	M12	37	M12	12	240	3	10
AF26060251237	60	25	M12	37	M12	12	230	3,75	10
AF26060301237	60	30	M12	37	M12	12	225	4,50	10
AF26060401237	60	40	M12	37	M12	12	218	6	10
AF26060451237	60	45	M12	37	M12	12	214	6,75	10
AF26060501237	60	50	M12	37	M12	12	210	7,50	10
AF26075251237	75	25	M12	37	M12	12	330	3,75	10
AF26075301237	75	30	M12	37	M12	12	320	4,50	10
AF26075401237	75	40	M12	37	M12	12	300	6	10
AF26075451237	75	45	M12	37	M12	12	290	6,75	10
AF26075501237	75	50	M12	37	M12	12	270	7,50	10
AF26075551237	75	55	M12	37	M12	12	260	8,25	10
AF260A0251647	100	25	M16	47	M16	15	650	3,75	5
AF260A0301647	100	30	M16	47	M16	15	640	4,50	5
AF260A0401647	100	40	M16	47	M16	15	630	6	5
AF260A0451647	100	45	M16	47	M16	15	620	6,75	5
AF260A0501647	100	50	M16	47	M16	15	600	7,50	5
AF260A0551647	100	55	M16	47	M16	15	599	8,25	5
AF260A0601647	100	60	M16	47	M16	15	595	9	5
AF260A0A01647	100	100	M16	47	M16	15	570	15	5
AF260C5551647	125	55	M16	47	M16	15	780	8,25	5
AF260C5751647	125	75	M16	47	M16	15	770	11,25	5
AF260C5A01647	125	100	M16	47	M16	15	765	15	5
AF260C5C51647	125	125	M16	47	M16	15	750	18,75	5
AF260F0502047	150	50	M20	47	M20	18	1120	7,50	5
AF260F0752047	150	75	M20	47	M20	18	1050	11,25	5
AF260F0A02047	150	100	M20	47	M20	18	990	15	5
AF260F0F02047	150	150	M20	47	M20	18	970	22,50	5
AF260K0A02447	200	100	M24	47	M24	20	1800	15	1

CYLINDRICAL ANTI-VIBRATION MOUNT

female - female

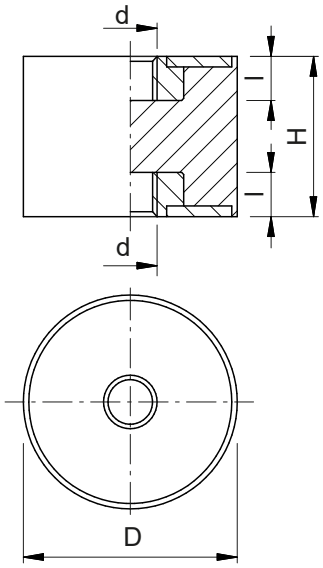

STANDARD
DIN 95363/C

MATERIAL - SURFACE TREATMENT

Body:	NR (Natural rubber)
Washer:	DD11 (Steel) white galvanized
Bushing:	CI 4 (Steel) white galvanized

COLOUR
NE Black

RUBBER HARDNESS
60 Shore A (±5)

OPERATING TEMPERATURE
-50°C ÷ 80°C

NOTES
* Indicates the maximum load that can be supported before its functionality is compromised. The load must be compressive - avoid applying traction.
** Indicates the height variation of the rubber under maximum load.

Available in other materials, hardnesses, dimensions, and colours.

Code NE	D (±1)	H (±1)	d	l (±1)	Max load (daN) *	Deflection (mm) **	Package (pcs)
AF36006070303	6	7	M3	3	3	1,05	100
AF36010100404	10	10	M4	4	13	1,50	50
AF36010100505	10	10	M5	5	13	1,50	50
AF36015100404	15	10	M4	4	23	1,50	50
AF36015100505	15	10	M5	5	23	1,50	50
AF36015150404	15	15	M4	4	23	2,25	50
AF36015150505	15	15	M5	5	23	2,25	50
AF36015200404	15	20	M4	4	21	3	50
AF36015200505	15	20	M5	5	21	3	50
AF36020090606	20	9	M6	6	44	1,35	50
AF36020100606	20	10	M6	6	44	1,50	50
AF36020150606	20	15	M6	6	42	2,25	50
AF36020200606	20	20	M6	6	40	3	50
AF36020250606	20	25	M6	6	36	3,75	50
AF36020300606	20	30	M6	6	34	4,50	50
AF36025100606	25	10	M6	6	60	1,50	50
AF36025150606	25	15	M6	6	58	2,25	50
AF36025170606	25	17	M6	6	58	2,55	50
AF36025200606	25	20	M6	6	54	3	50
AF36025250606	25	25	M6	6	50	3,75	50
AF36025300606	25	30	M6	6	42	4,50	50
AF36025400606	25	40	M6	6	35	6	50
AF36030100808	30	10	M8	8	80	1,50	25
AF36030150808	30	15	M8	8	78	2,25	25
AF36030200808	30	20	M8	8	77	3	25
AF36030250808	30	25	M8	8	75	3,75	25
AF36030300808	30	30	M8	8	70	4,50	25
AF36030400808	30	40	M8	8	68	6	25
AF36030500808	30	50	M8	8	65	7,50	25
AF36040150808	40	15	M8	8	150	2,25	25
AF36040151010	40	15	M10	10	150	2,25	25
AF36040200808	40	20	M8	8	145	3	25
AF36040201010	40	20	M10	10	145	3	25
AF36040250808	40	25	M8	8	140	3,75	25
AF36040251010	40	25	M10	10	140	3,75	25
AF36040300808	40	30	M8	8	138	4,50	25
AF36040301010	40	30	M10	10	138	4,50	25
AF36040350808	40	35	M8	8	130	5,25	25
AF36040351010	40	35	M10	10	130	5,25	25
AF36040400808	40	40	M8	8	115	6	25

STANDARD
DIN 95363/C

MATERIAL - SURFACE TREATMENT
Body: NR (Natural rubber)
Washer: DD11 (Steel) white galvanized
Bushing: CI 4 (Steel) white galvanized

COLOUR
NE Black

RUBBER HARDNESS
60 Shore A (±5)

OPERATING TEMPERATURE
-50°C ÷ 80°C

NOTES
* Indicates the maximum load that can be supported before its functionality is compromised. The load must be compressive - avoid applying traction.
** Indicates the height variation of the rubber under maximum load.

Available in other materials, hardnesses, dimensions, and colours.

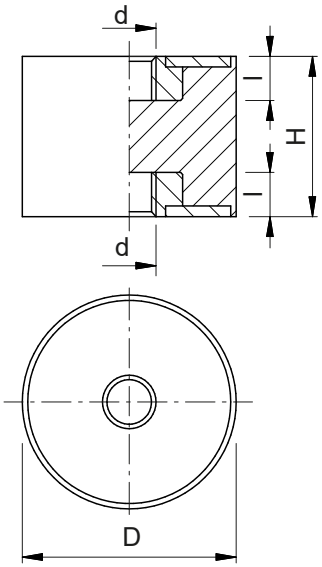

Code NE	D (±1)	H (±1)	d	l (±1)	Max load (daN) *	Deflection (mm) **	Package (pcs)
AF36040401010	40	40	M10	10	115	6	25
AF36040500808	40	50	M8	8	110	7,50	25
AF36040501010	40	50	M10	10	110	7,50	25
AF36050151010	50	15	M10	10	220	2,25	25
AF36050201010	50	20	M10	10	200	3	25
AF36050251010	50	25	M10	10	187	3,75	25
AF36050301010	50	30	M10	10	181	4,50	25
AF36050401010	50	40	M10	10	168	6	25
AF36050451010	50	45	M10	10	163	6,75	25
AF36050501010	50	50	M10	10	152	7,50	25
AF36060201212	60	20	M12	12	270	3	10
AF36060251212	60	25	M12	12	265	3,75	10
AF36060301212	60	30	M12	12	260	4,50	10
AF36060401212	60	40	M12	12	241	6	10
AF36060451212	60	45	M12	12	234	6,75	10
AF36060501212	60	50	M12	12	227	7,50	10
AF36075251212	75	25	M12	12	340	3,75	10
AF36075301212	75	30	M12	12	330	4,50	10
AF36075401212	75	40	M12	12	312	6	10
AF36075451212	75	45	M12	12	299	6,75	10
AF36075501212	75	50	M12	12	280	7,50	10
AF36075551212	75	55	M12	12	270	8,25	10
AF360A0251615	100	25	M16	15	770	3,75	5
AF360A0301615	100	30	M16	15	760	4,50	5
AF360A0401615	100	40	M16	15	750	6	5
AF360A0451615	100	45	M16	15	740	6,75	5
AF360A0501615	100	50	M16	15	720	7,50	5
AF360A0551615	100	55	M16	15	718	8,25	5
AF360A0601615	100	60	M16	15	710	9	5
AF360A0A01615	100	100	M16	15	656	15	5
AF360C5551615	125	55	M16	15	815	8,25	5
AF360C5751615	125	75	M16	15	810	11,25	5
AF360C5A01615	125	100	M16	15	805	15	5
AF360C5C51615	125	125	M16	15	800	18,75	5
AF360F0502018	150	50	M20	18	1130	7,50	5
AF360F0752018	150	75	M20	18	1100	11,25	5
AF360F0A02018	150	100	M20	18	1000	15	5
AF360F0F02018	150	150	M20	18	995	22,50	5
AF360K0A02420	200	100	M24	20	1800	15	1

CYLINDRICAL ANTI-VIBRATION MOUNT

buffer - male

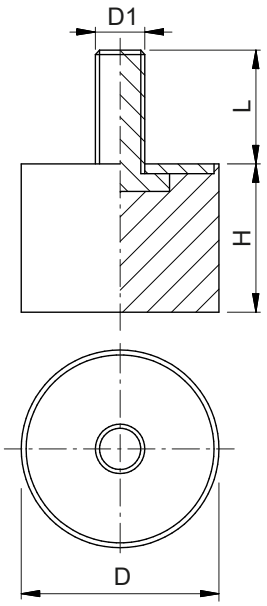

STANDARD
DIN 95364/A

MATERIAL - SURFACE TREATMENT

Body:	NR (Natural rubber)
Pin:	CI 4.8 (Steel) white galvanized
Washer:	DD11 (Steel) white galvanized

COLOUR
NE Black

RUBBER HARDNESS
60 Shore A (±5)

OPERATING TEMPERATURE
-50°C ÷ 80°C

NOTES
* Indicates the maximum load that can be supported before its functionality is compromised. The load must be compressive - avoid applying traction.
** Indicates the height variation of the rubber under maximum load.

Available in other materials, hardnesses, dimensions, and colours.

Code NE	D (±1)	H (±1)	D1	L (±1)	Max load (daN) *	Deflection (mm) **	Package (pcs)
AF46006070310	6	7	M3	10	2	1,05	100
AF46010100415	10	10	M4	15	8	1,50	50
AF46010100515	10	10	M5	15	8	1,50	50
AF46015100415	15	10	M4	15	11	1,50	50
AF46015100515	15	10	M5	15	11	1,50	50
AF46015150415	15	15	M4	15	10	2,25	50
AF46015150515	15	15	M5	15	10	2,25	50
AF46015200415	15	20	M4	15	9	3	50
AF46015200515	15	20	M5	15	9	3	50
AF46020090618	20	9	M6	18	26	1,35	50
AF46020100618	20	10	M6	18	25	1,50	50
AF46020150618	20	15	M6	18	21	2,25	50
AF46020200618	20	20	M6	18	20	3	50
AF46020250618	20	25	M6	18	19	3,75	50
AF46020300618	20	30	M6	18	18	4,50	50
AF46025100623	25	10	M6	23	32	1,50	50
AF46025150623	25	15	M6	23	31	2,25	50
AF46025170623	25	17	M6	23	31	2,55	50
AF46025200623	25	20	M6	23	30	3	50
AF46025250623	25	25	M6	23	30	3,75	50
AF46025300623	25	30	M6	23	29	4,50	50
AF46025400623	25	40	M6	23	26	6	50
AF46030100823	30	10	M8	23	50	1,50	25
AF46030150823	30	15	M8	23	48	2,25	25
AF46030200823	30	20	M8	23	45	3	25
AF46030250823	30	25	M8	23	43	3,75	25
AF46030300823	30	30	M8	23	41	4,50	25
AF46030400823	30	40	M8	23	40	6	25
AF46030500823	30	50	M8	23	35	7,50	25
AF46040150823	40	15	M8	23	90	2,25	25
AF46040151028	40	15	M10	28	90	2,25	25
AF46040200823	40	20	M8	23	80	3	25
AF46040201028	40	20	M10	28	85	3	25
AF46040250823	40	25	M8	23	79	3,75	25
AF46040251028	40	25	M10	28	83	3,75	25
AF46040300823	40	30	M8	23	78	4,50	25
AF46040301028	40	30	M10	28	80	4,50	25
AF46040350823	40	35	M8	23	78	5,25	25
AF46040351028	40	35	M10	28	80	5,25	25
AF46040400823	40	40	M8	23	75	6	25

STANDARD
DIN 95364/A

MATERIAL - SURFACE TREATMENT

Body:	NR (Natural rubber)
Pin:	CI 4.8 (Steel) white galvanized
Washer:	DD11 (Steel) white galvanized

COLOUR
NE Black

RUBBER HARDNESS
60 Shore A (±5)

OPERATING TEMPERATURE
-50°C ÷ 80°C

NOTES
* Indicates the maximum load that can be supported before its functionality is compromised. The load must be compressive - avoid applying traction.
** Indicates the height variation of the rubber under maximum load.

Available in other materials, hardnesses, dimensions, and colours.

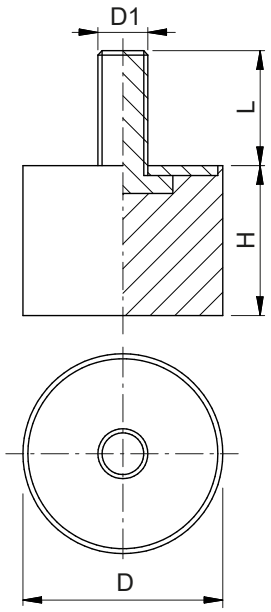

Code NE	D (±1)	H (±1)	D1	L (±1)	Max load (daN) *	Deflection (mm) **	Package (pcs)
AF46040401028	40	40	M10	28	75	6	25
AF46040500823	40	50	M8	23	69	7,50	25
AF46040501028	40	50	M10	28	69	7,50	25
AF46050151028	50	15	M10	28	120	2,25	25
AF46050201028	50	20	M10	28	110	3	25
AF46050251028	50	25	M10	28	100	3,75	25
AF46050301028	50	30	M10	28	98	4,50	25
AF46050401028	50	40	M10	28	97	6	25
AF46050451028	50	45	M10	28	95	6,75	25
AF46050501028	50	50	M10	28	90	7,50	25
AF46060201237	60	20	M12	37	163	3	10
AF46060251237	60	25	M12	37	150	3,75	10
AF46060301237	60	30	M12	37	140	4,50	10
AF46060401237	60	40	M12	37	138	6	10
AF46060451237	60	45	M12	37	135	6,75	10
AF46060501237	60	50	M12	37	135	7,50	10
AF46075251237	75	25	M12	37	240	3,75	10
AF46075301237	75	30	M12	37	235	4,50	10
AF46075401237	75	40	M12	37	230	6	10
AF46075451237	75	45	M12	37	220	6,75	10
AF46075501237	75	50	M12	37	215	7,50	10
AF46075551237	75	55	M12	37	200	8,25	10
AF460A0251647	100	25	M16	47	340	3,75	5
AF460A0301647	100	30	M16	47	330	4,50	5
AF460A0401647	100	40	M16	47	325	6	5
AF460A0451647	100	45	M16	47	320	6,75	5
AF460A0501647	100	50	M16	47	315	7,50	5
AF460A0551647	100	55	M16	47	310	8,25	5
AF460A0601647	100	60	M16	47	305	9	5
AF460A0A01647	100	100	M16	47	300	15	5
AF460C5551647	125	55	M16	47	510	8,25	5
AF460C5751647	125	75	M16	47	510	11,25	5
AF460C5A01647	125	100	M16	47	500	15	5
AF460C5C51647	125	125	M16	47	495	18,75	5
AF460F0502047	150	50	M20	47	790	7,50	5
AF460F0752047	150	75	M20	47	780	11,25	5
AF460F0A02047	150	100	M20	47	770	15	5
AF460F0F02047	150	150	M20	47	750	22,50	5
AF460K0A02447	200	100	M24	47	1800	15	1

CYLINDRICAL ANTI-VIBRATION MOUNT

buffer - female

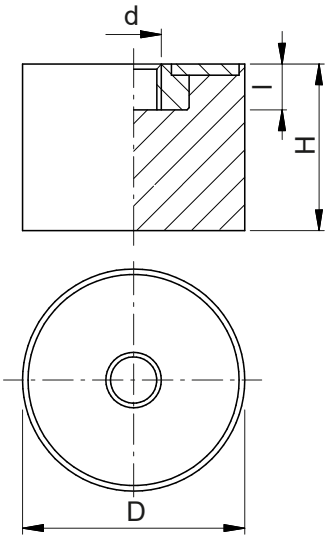

STANDARD
DIN 95364/C

MATERIAL - SURFACE TREATMENT

Body:	NR (Natural rubber)
Washer:	DD11 (Steel) white galvanized
Bushing:	Cl 4 (Steel) white galvanized

COLOUR
NE Black

RUBBER HARDNESS
60 Shore A (±5)

OPERATING TEMPERATURE
-50°C ÷ 80°C

NOTES
* Indicates the maximum load that can be supported before its functionality is compromised. The load must be compressive - avoid applying traction.
** Indicates the height variation of the rubber under maximum load.

Available in other materials, hardnesses, dimensions, and colours.

Code NE	D (±1)	H (±1)	d	l (±1)	Max load (daN) *	Deflection (mm) **	Package (pcs)
AF56006070303	6	7	M3	3	2	1,05	100
AF56010100404	10	10	M4	4	8	1,50	50
AF56010100505	10	10	M5	5	8	1,50	50
AF56015100404	15	10	M4	4	12	1,50	50
AF56015100505	15	10	M5	5	12	1,50	50
AF56015150404	15	15	M4	4	11	2,25	50
AF56015150505	15	15	M5	5	11	2,25	50
AF56015200404	15	20	M4	4	10	3	50
AF56015200505	15	20	M5	5	10	3	50
AF56020100606	20	10	M6	6	29	1,50	50
AF56020150606	20	15	M6	6	24	2,25	50
AF56020200606	20	20	M6	6	22	3	50
AF56020250606	20	25	M6	6	20	3,75	50
AF56020300606	20	30	M6	6	19	4,50	50
AF56025100606	25	10	M6	6	34	1,50	50
AF56025150606	25	15	M6	6	33	2,25	50
AF56025170606	25	17	M6	6	33	2,55	50
AF56025200606	25	20	M6	6	31	3	50
AF56025250606	25	25	M6	6	31	3,75	50
AF56025300606	25	30	M6	6	30	4,50	50
AF56025400606	25	40	M6	6	28	6	50
AF56030100808	30	10	M8	8	52	1,50	25
AF56030150808	30	15	M8	8	50	2,25	25
AF56030200808	30	20	M8	8	48	3	25
AF56030250808	30	25	M8	8	45	3,75	25
AF56030300808	30	30	M8	8	43	4,50	25
AF56030400808	30	40	M8	8	42	6	25
AF56030500808	30	50	M8	8	40	7,50	25
AF56040150808	40	15	M8	8	93	2,25	25
AF56040151010	40	15	M10	10	95	2,25	25
AF56040200808	40	20	M8	8	83	3	25
AF56040201010	40	20	M10	10	90	3	25
AF56040250808	40	25	M8	8	82	3,75	25
AF56040251010	40	25	M10	10	85	3,75	25
AF56040300808	40	30	M8	8	82	4,50	25
AF56040301010	40	30	M10	10	84	4,50	25
AF56040350808	40	35	M8	8	82	5,25	25
AF56040351010	40	35	M10	10	83	5,25	25
AF56040400808	40	40	M8	8	80	6	25
AF56040401010	40	40	M10	10	82	6	25

STANDARD
DIN 95364/C

MATERIAL - SURFACE TREATMENT

Body:	NR (Natural rubber)
Washer:	DD11 (Steel) white galvanized
Bushing:	CI 4 (Steel) white galvanized

COLOUR
NE Black

RUBBER HARDNESS
60 Shore A (±5)

OPERATING TEMPERATURE
-50°C ÷ 80°C

NOTES
* Indicates the maximum load that can be supported before its functionality is compromised. The load must be compressive - avoid applying traction.
** Indicates the height variation of the rubber under maximum load.

Available in other materials, hardnesses, dimensions, and colours.

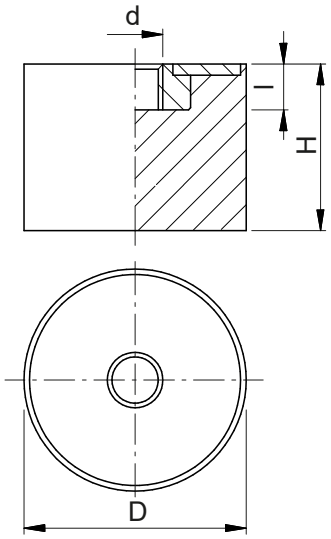

Code NE	D (±1)	H (±1)	d	l (±1)	Max load (daN) *	Deflection (mm) **	Package (pcs)
AF56040500808	40	50	M8	8	75	7,50	25
AF56040501010	40	50	M10	10	78	7,50	25
AF56050151010	50	15	M10	10	126	2,25	25
AF56050201010	50	20	M10	10	116	3	25
AF56050251010	50	25	M10	10	110	3,75	25
AF56050301010	50	30	M10	10	101	4,50	25
AF56050401010	50	40	M10	10	100	6	25
AF56050451010	50	45	M10	10	99	6,75	25
AF56050501010	50	50	M10	10	95	7,50	25
AF56060201212	60	20	M12	12	172	3	10
AF56060251212	60	25	M12	12	163	3,75	10
AF56060301212	60	30	M12	12	151	4,50	10
AF56060401212	60	40	M12	12	148	6	10
AF56060451212	60	45	M12	12	145	6,75	10
AF56060501212	60	50	M12	12	140	7,50	10
AF56075251212	75	25	M12	12	251	3,75	10
AF56075301212	75	30	M12	12	245	4,50	10
AF56075401212	75	40	M12	12	240	6	10
AF56075451212	75	45	M12	12	240	6,75	10
AF56075501212	75	50	M12	12	240	7,50	10
AF56075551212	75	55	M12	12	220	8,25	10
AF560A0251615	100	25	M16	15	363	3,75	5
AF560A0301615	100	30	M16	15	354	4,50	5
AF560A0401615	100	40	M16	15	343	6	5
AF560A0451615	100	45	M16	15	333	6,75	5
AF560A0501615	100	50	M16	15	325	7,50	5
AF560A0551615	100	55	M16	15	321	8,25	5
AF560A0601615	100	60	M16	15	320	9	5
AF560A0A01615	100	100	M16	15	318	15	5
AF560C5551615	125	55	M16	15	531	8,25	5
AF560C5751615	125	75	M16	15	531	11,25	5
AF560C5A01615	125	100	M16	15	520	15	5
AF560C5C51615	125	125	M16	15	518	18,75	5
AF560F0502018	150	50	M20	18	810	7,50	5
AF560F0752018	150	75	M20	18	800	11,25	5
AF560F0A02018	150	100	M20	18	790	15	5
AF560F0F02018	150	150	M20	18	775	22,50	5
AF560K0A02420	200	100	M24	20	1800	15	1

PARABOLIC ANTI-VIBRATION MOUNT

buffer - male

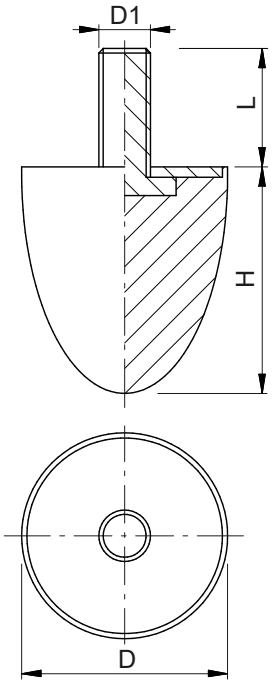

STANDARD
DIN 95364/F

MATERIAL - SURFACE TREATMENT

Body:	NR (Natural rubber)
Pin:	CI 4.8 (Steel) white galvanized
Washer:	DD11 (Steel) white galvanized

COLOUR
NE Black

RUBBER HARDNESS
60 Shore A (±5)

OPERATING TEMPERATURE
-50°C ÷ 80°C

NOTES
* Indicates the maximum load that can be supported before its functionality is compromised. The load must be compressive - avoid applying traction.
** Indicates the height variation of the rubber under maximum load.

Available in other materials, hardnesses, dimensions, and colours.

Code NE	D (±1)	H (±1)	D1	L (±1)	Max load (daN) *	Deflection (mm) **	Package (pcs)
AF76020240618	20	24	M6	18	40	10	50
AF76025200618	25	20	M6	18	120	10	50
AF76030150616	30	15	M6	18	120	10	25
AF76030150823	30	15	M8	23	120	10	25
AF76030300823	30	30	M8	23	150	15	25
AF76030360823	30	36	M8	23	150	20	25
AF76040300823	40	30	M8	23	210	15	25
AF76040600823	40	60	M8	23	280	25	25
AF76050501028	50	50	M10	28	400	30	25
AF76050581028	50	58	M10	28	400	35	25
AF76050670823	50	67	M8	23	300	30	25
AF76050671028	50	67	M10	28	300	30	25
AF76060601237	60	60	M12	37	229,2	12	10
AF76075891237	75	89	M12	37	800	50	10
AF76095891647	95	80	M16	47	1100	40	10
AF760A0831647	100	83	M16	47	1300	40	5

STANDARD
DIN 95364/E

MATERIAL - SURFACE TREATMENT

Body:	NR (Natural rubber)
Washer:	DD11 (Steel) white galvanized
Bushing:	CI 4 (Steel) white galvanized

COLOUR
NE Black

RUBBER HARDNESS
60 Shore A (±5)

OPERATING TEMPERATURE
-50°C ÷ 80°C

NOTES
* Indicates the maximum load that can be supported before its functionality is compromised. The load must be compressive - avoid applying traction.
** Indicates the height variation of the rubber under maximum load.

Available in other materials, hardnesses, dimensions, and colours.

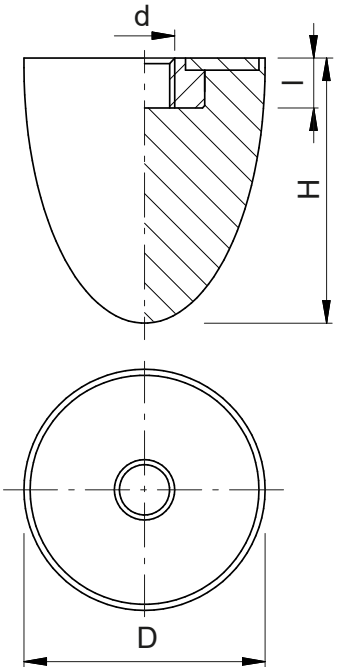

Code NE	D (±1)	H (±1)	d	l (±1)	Max load (daN) *	Deflection (mm) **	Package (pcs)
AF86020240606	20	24	M6	6	40	10	50
AF86025200606	25	20	M6	6	120	10	50
AF86030150606	30	15	M6	6	120	10	25
AF86030150808	30	15	M8	8	120	10	25
AF86030300808	30	30	M8	8	150	15	25
AF86030360808	30	36	M8	8	150	20	25
AF86040300808	40	30	M8	8	210	15	25
AF86040600808	40	60	M8	8	280	25	25
AF86050501010	50	50	M10	10	400	30	25
AF86050581010	50	58	M10	10	400	35	25
AF86050670808	50	67	M8	8	300	30	25
AF86050671010	50	67	M10	10	300	30	25
AF86060601212	60	60	M12	12	229,2	12	10
AF86075891212	75	89	M12	12	800	50	10
AF86095891616	95	80	M16	16	1100	40	10
AF860A0831616	100	83	M16	16	1300	40	5

WAISTED ANTI-VIBRATION MOUNT
male - male

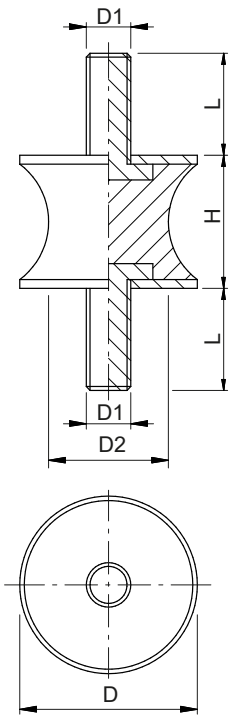

STANDARD
DIN 95363/D

MATERIAL - SURFACE TREATMENT

Body:	NR (Natural rubber)
Pin:	CI 4.8 (Steel) white galvanized
Washer:	DD11 (Steel) white galvanized

COLOUR
NE Black

RUBBER HARDNESS
60 Shore A (±5)

OPERATING TEMPERATURE
-50°C ÷ 80°C

NOTES
* Indicates the maximum load that can be supported before its functionality is compromised. The load must be compressive - avoid applying traction.
** Indicates the height variation of the rubber under maximum load.

Available in other materials, hardnesses, dimensions, and colours.

Code NE	D (±1)	H (±1)	D1	L (±1)	D2 (±1)	Max load (daN) *	Deflection (mm) **	Package (pcs)
AFF6010180410	10	10	M4	10	8	3	2	50
AFF6025200618	25	20	M6	18	10	16,8	4	50
AFF6025270618	25	20	M6	18	17	29,2	4	50
AFF6030200823	30	20	M8	23	20	38,4	4	25
AFF6030240823	30	20	M8	23	24	40,4	4	25
AFF6040390823	40	30	M8	23	19	37,2	6	25
AFF6040391028	40	30	M10	28	19	37,2	6	25
AFF6040370823	40	30	M8	23	27	63	6	25
AFF6040371028	40	30	M10	28	27	63	6	25
AFF6050381028	50	30	M10	28	28	190,2	6	25
AFF6050391028	50	30	M10	28	39	222	6	25
AFF6075401237	75	40	M12	37	55	72	8	10
AFF6080601237	80	60	M12	37	60	530,4	12	10

STANDARD
DIN 95363/E

MATERIAL - SURFACE TREATMENT

Body:	NR (Natural rubber)
Pin:	Cl 4.8 (Steel) white galvanized
Washer:	DD11 (Steel) white galvanized
Bushing:	Cl 4 (Steel) white galvanized

COLOUR
NE Black

RUBBER HARDNESS
60 Shore A (±5)

OPERATING TEMPERATURE
-50°C ÷ 80°C

NOTES
* Indicates the maximum load that can be supported before its functionality is compromised. The load must be compressive - avoid applying traction.
** Indicates the height variation of the rubber under maximum load.

Available in other materials, hardnesses, dimensions, and colours.

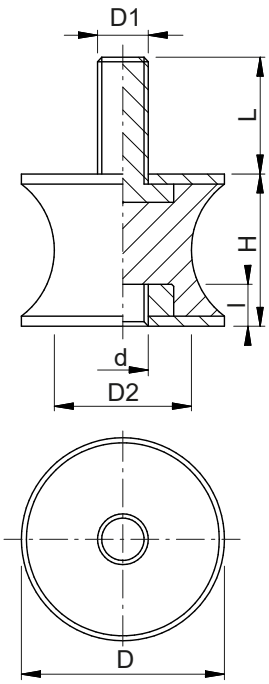

Code NE	D (±1)	H (±1)	D1	L (±1)	d	l (±1)	D2 (±1)	Max load (daN) *	Deflection (mm) **	Package (pcs)
AFG6010180410	10	10	M4	10	M4	4	8	3,1	2	50
AFG6025200618	25	20	M6	18	M6	6	10	17,1	4	50
AFG6025270618	25	20	M6	18	M6	6	17	29,8	4	50
AFG6030200823	30	20	M8	23	M8	8	20	6,1	4	25
AFG6030240823	30	20	M8	23	M8	8	24	6,1	4	25
AFG6040390823	40	30	M8	23	M8	8	19	37,9	6	25
AFG6040391028	40	30	M10	28	M10	10	19	37,9	6	25
AFG6040370823	40	30	M8	23	M8	8	27	64,3	6	25
AFG6040371028	40	30	M10	28	M10	10	27	64,3	6	25
AFG6050381028	50	30	M10	28	M10	10	28	194	6	25
AFG6050391028	50	30	M10	28	M10	10	39	226,4	6	25
AFG6075401237	75	40	M12	37	M12	12	55	73,4	8	10
AFG6080601237	80	60	M12	37	M12	12	60	541	12	10

WAISTED ANTI-VIBRATION MOUNT
female - female

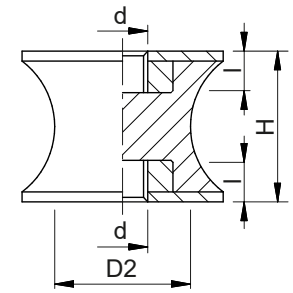

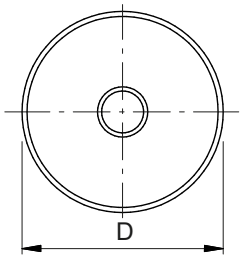

STANDARD
DIN 95363/F

MATERIAL - SURFACE TREATMENT

Body:	NR (Natural rubber)
Washer:	DD11 (Steel) white galvanized
Bushing:	Cl 4 (Steel) white galvanized

COLOUR
NE Black

RUBBER HARDNESS
60 Shore A (±5)

OPERATING TEMPERATURE
-50°C ÷ 80°C

NOTES
* Indicates the maximum load that can be supported before its functionality is compromised. The load must be compressive - avoid applying traction.
** Indicates the height variation of the rubber under maximum load.

Available in other materials, hardnesses, dimensions, and colours.

Code NE	D (±1)	H (±1)	d	l (±1)	D2 (±1)	Max load (daN) *	Deflection (mm) **	Package (pcs)
AFH6010180404	10	10	M4	4	8	3,1	2	50
AFH6025200606	25	20	M6	6	10	17,5	4	50
AFH6025270606	25	20	M6	6	17	30,4	4	50
AFH6030200808	30	20	M8	8	20	6,2	4	25
AFH6030240808	30	20	M8	8	24	6,2	4	25
AFH6040390808	40	30	M8	8	19	38,7	6	25
AFH6040391010	40	30	M10	10	19	38,7	6	25
AFH6040370808	40	30	M8	8	27	65,5	6	25
AFH6040371010	40	30	M10	10	27	65,5	6	25
AFH6050381010	50	30	M10	10	28	197,9	6	25
AFH6050391010	50	30	M10	10	39	231	6	25
AFH6075401212	75	40	M12	12	55	74,9	8	10
AFH6080601212	80	60	M12	12	60	551,8	12	10

MATERIAL - SURFACE TREATMENT

Body: NR (Natural rubber)
Bell: AC (Steel) white galvanized
Base: AC (Steel) white galvanized

COLOUR

NE Black

RUBBER HARDNESS

60 Shore A (±5)

OPERATING TEMPERATURE

-50°C ÷ 80°C

NOTES

* Indicates the maximum load that can be supported before its functionality is compromised. The load must be compressive - avoid applying traction.

Available in other materials, hardnesses, dimensions, and colours.

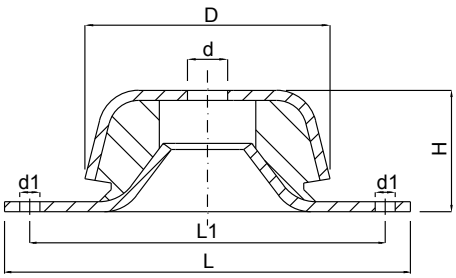

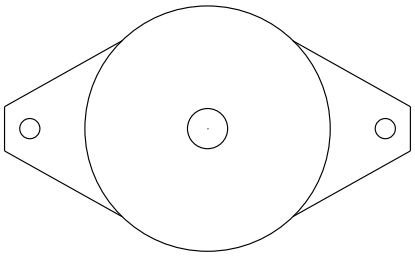

Code NE	D (±1)	H (±1)	d	d1	L (±1)	L1 (±1)	Max load (daN) *	Package (pcs)
AFB6004800820	48	23	8,2	6,2	88	68	90	100
AFB6006201020	62	30	10,2	8,2	100	85	225	100
AFB6009201620	92	45	16,2	10,2	130	108	490	50
AFB6011402420	114	50	24,2	16,2	190	160	690	25

BELL-SHAPED MACHINERY MOUNT
with thread

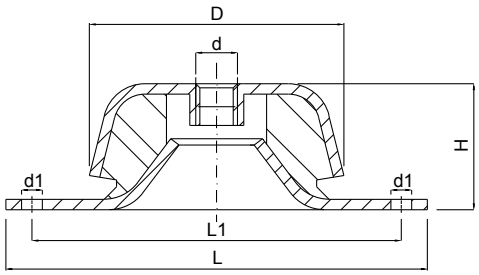

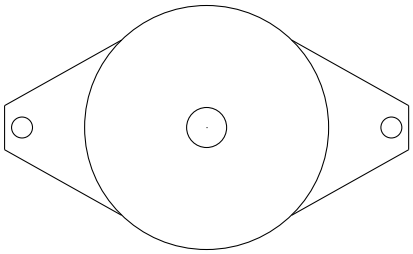

MATERIAL - SURFACE TREATMENT

Body:	NR (Natural rubber)
Bell:	AC (Steel) white galvanized
Base:	AC (Steel) white galvanized
Bushing:	Cl 4 (Steel) white galvanized

COLOUR
NE Black

RUBBER HARDNESS
60 Shore A (±5)

OPERATING TEMPERATURE
-50°C ÷ 80°C

NOTES
* Indicates the maximum load that can be supported before its functionality is compromised. The load must be compressive - avoid applying traction.

Available in other materials, hardnesses, dimensions, and colours.

Code NE	D (±1)	H (±1)	d	d1	L (±1)	L1 (±1)	Max load (daN) *	Package (pcs)
AFA6004800800	48	23	M8	6,2	88	68	90	100
AFA6006201000	62	30	M10	8,2	100	85	225	100
AFA6006201200	62	30	M12	8,2	100	85	225	100
AFA6009201200	92	45	M12	10,2	130	108	490	50
AFA6009201400	92	45	M14	10,2	130	108	490	50
AFA6009201600	92	45	M16	10,2	130	108	490	50
AFA6011401600	114	50	M16	16,2	190	160	690	25

7

PLASTIC FASTENERS

Set screws
page 7.1

Screws
page 7.8

Threaded rods
page 7.46

Nuts
page 7.47

Washers
page 7.49

STANDARD
Similar to DIN 551

MATERIAL
Nylon

COLOUR
(NA) Natural

NOTES
Available in other colours.

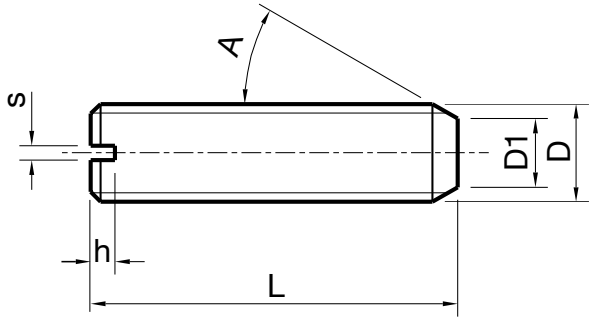

Code (NA)	D	Pitch	L	s (min)	h (min)	D1 (min)	A	Package (pcs)
05S6100300400	M3	0,5	4	0,5	0,8	1,75	15° ÷ 30°	1.000
05S6100300500	M3	0,5	5	0,5	0,8	1,75	15° ÷ 30°	1.000
05S6100300600	M3	0,5	6	0,5	0,8	1,75	15° ÷ 30°	1.000
05S6100300800	M3	0,5	8	0,5	0,8	1,75	15° ÷ 30°	1.000
05S6100300900	M3	0,5	9	0,5	0,8	1,75	15° ÷ 30°	1.000
05S6100301000	M3	0,5	10	0,5	0,8	1,75	15° ÷ 30°	1.000
05S6100301100	M3	0,5	11	0,5	0,8	1,75	15° ÷ 30°	1.000
05S6100301200	M3	0,5	12	0,5	0,8	1,75	15° ÷ 30°	1.000
05S6100301300	M3	0,5	13	0,5	0,8	1,75	15° ÷ 30°	1.000
05S6100301500	M3	0,5	15	0,5	0,8	1,75	15° ÷ 30°	1.000
05S6100301600	M3	0,5	16	0,5	0,8	1,75	15° ÷ 30°	1.000
05S6100301700	M3	0,5	17	0,5	0,8	1,75	15° ÷ 30°	1.000
05S6100301900	M3	0,5	19	0,5	0,8	1,75	15° ÷ 30°	1.000
05S6100302000	M3	0,5	20	0,5	0,8	1,75	15° ÷ 30°	1.000
05S6100302100	M3	0,5	21	0,5	0,8	1,75	15° ÷ 30°	1.000
05S6100302600	M3	0,5	26	0,5	0,8	1,75	15° ÷ 30°	1.000
05S6100303100	M3	0,5	31	0,5	0,8	1,75	15° ÷ 30°	1.000
05S6100303400	M3	0,5	34	0,5	0,8	1,75	15° ÷ 30°	1.000
05S6100303500	M3	0,5	35	0,5	0,8	1,75	15° ÷ 30°	1.000
05S6100400400	M4	0,7	4	0,7	1,12	2,25	15° ÷ 30°	1.000
05S6100400500	M4	0,7	5	0,7	1,12	2,25	15° ÷ 30°	1.000
05S6100400600	M4	0,7	6	0,7	1,12	2,25	15° ÷ 30°	1.000
05S6100400700	M4	0,7	7	0,7	1,12	2,25	15° ÷ 30°	1.000
05S6100400800	M4	0,7	8	0,7	1,12	2,25	15° ÷ 30°	1.000
05S6100400900	M4	0,7	9	0,7	1,12	2,25	15° ÷ 30°	1.000
05S6100401000	M4	0,7	10	0,7	1,12	2,25	15° ÷ 30°	1.000
05S6100401100	M4	0,7	11	0,7	1,12	2,25	15° ÷ 30°	1.000
05S6100401200	M4	0,7	12	0,7	1,12	2,25	15° ÷ 30°	1.000
05S6100401300	M4	0,7	13	0,7	1,12	2,25	15° ÷ 30°	1.000
05S6100401500	M4	0,7	15	0,7	1,12	2,25	15° ÷ 30°	1.000
05S6100401600	M4	0,7	16	0,7	1,12	2,25	15° ÷ 30°	1.000
05S6100401700	M4	0,7	17	0,7	1,12	2,25	15° ÷ 30°	1.000
05S6100401900	M4	0,7	19	0,7	1,12	2,25	15° ÷ 30°	1.000
05S6100402000	M4	0,7	20	0,7	1,12	2,25	15° ÷ 30°	1.000
05S6100402100	M4	0,7	21	0,7	1,12	2,25	15° ÷ 30°	1.000
05S6100402500	M4	0,7	25	0,7	1,12	2,25	15° ÷ 30°	1.000

STANDARD
Similar to DIN 551

MATERIAL
Nylon

COLOUR
(NA) Natural

NOTES
Available in other colours.

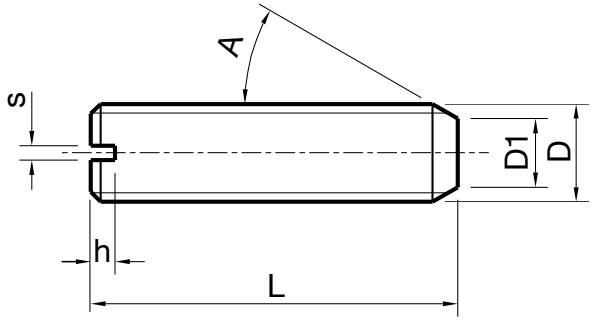

Code (NA)	D	Pitch	L	s (min)	h (min)	D1 (min)	A	Package (pcs)
05S6100402600	M4	0,7	26	0,7	1,12	2,25	15° ÷ 30°	1.000
05S6100402900	M4	0,7	29	0,7	1,12	2,25	15° ÷ 30°	1.000
05S6100403000	M4	0,7	30	0,7	1,12	2,25	15° ÷ 30°	1.000
05S6100403100	M4	0,7	31	0,7	1,12	2,25	15° ÷ 30°	1.000
05S6100403500	M4	0,7	35	0,7	1,12	2,25	15° ÷ 30°	1.000
05S6100404000	M4	0,7	40	0,7	1,12	2,25	15° ÷ 30°	1.000
05S6100404100	M4	0,7	41	0,7	1,12	2,25	15° ÷ 30°	1.000
05S6100500500	M5	0,8	5	0,9	1,28	3,2	15° ÷ 30°	1.000
05S6100500600	M5	0,8	6	0,9	1,28	3,2	15° ÷ 30°	1.000
05S6100500700	M5	0,8	7	0,9	1,28	3,2	15° ÷ 30°	1.000
05S6100500800	M5	0,8	8	0,9	1,28	3,2	15° ÷ 30°	1.000
05S6100500900	M5	0,8	9	0,9	1,28	3,2	15° ÷ 30°	1.000
05S6100501000	M5	0,8	10	0,9	1,28	3,2	15° ÷ 30°	1.000
05S6100501100	M5	0,8	11	0,9	1,28	3,2	15° ÷ 30°	1.000
05S6100501200	M5	0,8	12	0,9	1,28	3,2	15° ÷ 30°	1.000
05S6100501300	M5	0,8	13	0,9	1,28	3,2	15° ÷ 30°	1.000
05S6100501500	M5	0,8	15	0,9	1,28	3,2	15° ÷ 30°	1.000
05S6100501600	M5	0,8	16	0,9	1,28	3,2	15° ÷ 30°	1.000
05S6100501700	M5	0,8	17	0,9	1,28	3,2	15° ÷ 30°	1.000
05S6100501800	M5	0,8	18	0,9	1,28	3,2	15° ÷ 30°	1.000
05S6100502000	M5	0,8	20	0,9	1,28	3,2	15° ÷ 30°	1.000
05S6100502100	M5	0,8	21	0,9	1,28	3,2	15° ÷ 30°	1.000
05S6100502500	M5	0,8	25	0,9	1,28	3,2	15° ÷ 30°	1.000
05S6100502600	M5	0,8	26	0,9	1,28	3,2	15° ÷ 30°	1.000
05S6100503000	M5	0,8	30	0,9	1,28	3,2	15° ÷ 30°	1.000
05S6100503100	M5	0,8	31	0,9	1,28	3,2	15° ÷ 30°	1.000
05S6100503600	M5	0,8	36	0,9	1,28	3,2	15° ÷ 30°	1.000
05S6100504000	M5	0,8	40	0,9	1,28	3,2	15° ÷ 30°	1.000
05S6100504100	M5	0,8	41	0,9	1,28	3,2	15° ÷ 30°	1.000
05S6100504600	M5	0,8	46	0,9	1,28	3,2	15° ÷ 30°	1.000
05S6100505100	M5	0,8	51	0,9	1,28	3,2	15° ÷ 30°	1.000
05S6100600500	M6	1	5	1,2	1,6	3,7	15° ÷ 30°	1.000
05S6100600600	M6	1	6	1,2	1,6	3,7	15° ÷ 30°	1.000
05S6100600700	M6	1	7	1,2	1,6	3,7	15° ÷ 30°	1.000
05S6100600800	M6	1	8	1,2	1,6	3,7	15° ÷ 30°	1.000
05S6100600900	M6	1	9	1,2	1,6	3,7	15° ÷ 30°	1.000

STANDARD
Similar to DIN 551

MATERIAL
Nylon

COLOUR
(NA) Natural

NOTES
Available in other colours.

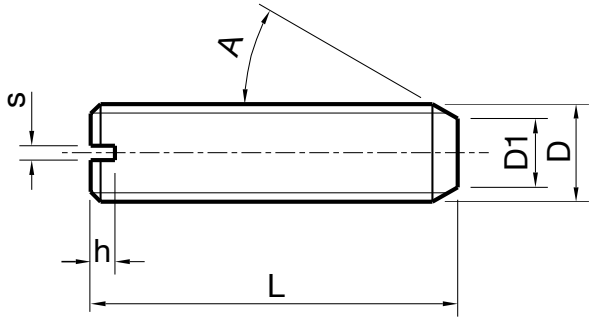

Code (NA)	D	Pitch	L	s (min)	h (min)	D1 (min)	A	Package (pcs)
05S6100601000	M6	1	10	1,2	1,6	3,7	15° ÷ 30°	1.000
05S6100601100	M6	1	11	1,2	1,6	3,7	15° ÷ 30°	1.000
05S6100601200	M6	1	12	1,2	1,6	3,7	15° ÷ 30°	1.000
05S6100601300	M6	1	13	1,2	1,6	3,7	15° ÷ 30°	1.000
05S6100601500	M6	1	15	1,2	1,6	3,7	15° ÷ 30°	1.000
05S6100601600	M6	1	16	1,2	1,6	3,7	15° ÷ 30°	1.000
05S6100601700	M6	1	17	1,2	1,6	3,7	15° ÷ 30°	1.000
05S6100601800	M6	1	18	1,2	1,6	3,7	15° ÷ 30°	1.000
05S6100602000	M6	1	20	1,2	1,6	3,7	15° ÷ 30°	1.000
05S6100602100	M6	1	21	1,2	1,6	3,7	15° ÷ 30°	1.000
05S6100602200	M6	1	22	1,2	1,6	3,7	15° ÷ 30°	1.000
05S6100602500	M6	1	25	1,2	1,6	3,7	15° ÷ 30°	1.000
05S6100602600	M6	1	26	1,2	1,6	3,7	15° ÷ 30°	1.000
05S6100603000	M6	1	30	1,2	1,6	3,7	15° ÷ 30°	1.000
05S6100603100	M6	1	31	1,2	1,6	3,7	15° ÷ 30°	1.000
05S6100603200	M6	1	32	1,2	1,6	3,7	15° ÷ 30°	1.000
05S6100603500	M6	1	35	1,2	1,6	3,7	15° ÷ 30°	1.000
05S6100603600	M6	1	36	1,2	1,6	3,7	15° ÷ 30°	1.000
05S6100604000	M6	1	40	1,2	1,6	3,7	15° ÷ 30°	1.000
05S6100604100	M6	1	41	1,2	1,6	3,7	15° ÷ 30°	1.000
05S6100604500	M6	1	45	1,2	1,6	3,7	15° ÷ 30°	1.000
05S6100604600	M6	1	46	1,2	1,6	3,7	15° ÷ 30°	1.000
05S6100605000	M6	1	50	1,2	1,6	3,7	15° ÷ 30°	1.000
05S6100605100	M6	1	51	1,2	1,6	3,7	15° ÷ 30°	1.000
05S6100605600	M6	1	56	1,2	1,6	3,7	15° ÷ 30°	1.000
05S6100606000	M6	1	60	1,2	1,6	3,7	15° ÷ 30°	1.000
05S6100607000	M6	1	70	1,2	1,6	3,7	15° ÷ 30°	1.000
05S6100800500	M8	1,25	5	1,3	2	5,2	15° ÷ 30°	1.000
05S6100800600	M8	1,25	6	1,3	2	5,2	15° ÷ 30°	1.000
05S6100800700	M8	1,25	7	1,3	2	5,2	15° ÷ 30°	1.000
05S6100800800	M8	1,25	8	1,3	2	5,2	15° ÷ 30°	1.000
05S6100800900	M8	1,25	9	1,3	2	5,2	15° ÷ 30°	1.000
05S6100801000	M8	1,25	10	1,3	2	5,2	15° ÷ 30°	1.000
05S6100801100	M8	1,25	11	1,3	2	5,2	15° ÷ 30°	1.000
05S6100801200	M8	1,25	12	1,3	2	5,2	15° ÷ 30°	1.000
05S6100801400	M8	1,25	14	1,3	2	5,2	15° ÷ 30°	1.000

STANDARD
Similar to DIN 551

MATERIAL
Nylon

COLOUR
(NA) Natural

NOTES
Available in other colours.

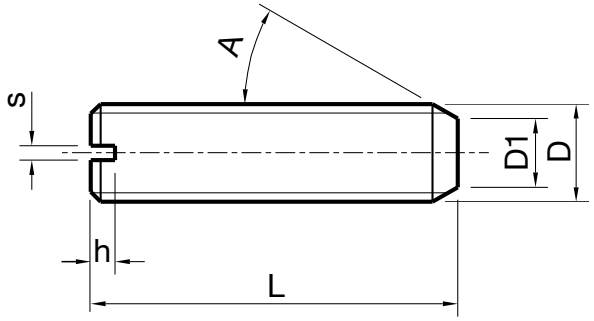

Code (NA)	D	Pitch	L	s (min)	h (min)	D1 (min)	A	Package (pcs)
05S6100801500	M8	1,25	15	1,3	2	5,2	15° ÷ 30°	1.000
05S6100801600	M8	1,25	16	1,3	2	5,2	15° ÷ 30°	1.000
05S6100801700	M8	1,25	17	1,3	2	5,2	15° ÷ 30°	1.000
05S6100801800	M8	1,25	18	1,3	2	5,2	15° ÷ 30°	1.000
05S6100801900	M8	1,25	19	1,3	2	5,2	15° ÷ 30°	1.000
05S6100802000	M8	1,25	20	1,3	2	5,2	15° ÷ 30°	1.000
05S6100802200	M8	1,25	22	1,3	2	5,2	15° ÷ 30°	1.000
05S6100802500	M8	1,25	25	1,3	2	5,2	15° ÷ 30°	1.000
05S6100802600	M8	1,25	26	1,3	2	5,2	15° ÷ 30°	1.000
05S6100802700	M8	1,25	27	1,3	2	5,2	15° ÷ 30°	1.000
05S6100803000	M8	1,25	30	1,3	2	5,2	15° ÷ 30°	1.000
05S6100803100	M8	1,25	31	1,3	2	5,2	15° ÷ 30°	1.000
05S6100803500	M8	1,25	35	1,3	2	5,2	15° ÷ 30°	1.000
05S6100803700	M8	1,25	37	1,3	2	5,2	15° ÷ 30°	1.000
05S6100804000	M8	1,25	40	1,3	2	5,2	15° ÷ 30°	1.000
05S6100804200	M8	1,25	42	1,3	2	5,2	15° ÷ 30°	1.000
05S6100804700	M8	1,25	47	1,3	2	5,2	15° ÷ 30°	1.000
05S6100805000	M8	1,25	50	1,3	2	5,2	15° ÷ 30°	1.000
05S6100805100	M8	1,25	51	1,3	2	5,2	15° ÷ 30°	1.000
05S6100805200	M8	1,25	52	1,3	2	5,2	15° ÷ 30°	1.000
05S6100806000	M8	1,25	60	1,3	2	5,2	15° ÷ 30°	1.000
05S6100806200	M8	1,25	62	1,3	2	5,2	15° ÷ 30°	1.000
05S6100806700	M8	1,25	67	1,3	2	5,2	15° ÷ 30°	1.000
05S6100808000	M8	1,25	80	1,3	2	5,2	15° ÷ 30°	1.000
05S6101000500	M10	1,5	5	1,6	4,1	6,64	15° ÷ 30°	1.000
05S6101000600	M10	1,5	6	1,6	4,1	6,64	15° ÷ 30°	1.000
05S6101000700	M10	1,5	7	1,6	4,1	6,64	15° ÷ 30°	1.000
05S6101000800	M10	1,5	8	1,6	4,1	6,64	15° ÷ 30°	1.000
05S6101000900	M10	1,5	9	1,6	4,1	6,64	15° ÷ 30°	1.000
05S6101001000	M10	1,5	10	1,6	4,1	6,64	15° ÷ 30°	1.000
05S6101001200	M10	1,5	12	1,6	4,1	6,64	15° ÷ 30°	1.000
05S6101001300	M10	1,5	13	1,6	4,1	6,64	15° ÷ 30°	1.000
05S6101001400	M10	1,5	14	1,6	4,1	6,64	15° ÷ 30°	1.000
05S6101001600	M10	1,5	16	1,6	4,1	6,64	15° ÷ 30°	1.000
05S6101002000	M10	1,5	20	1,6	4,1	6,64	15° ÷ 30°	1.000
05S6101002100	M10	1,5	21	1,6	4,1	6,64	15° ÷ 30°	1.000

STANDARD
Similar to DIN 551

MATERIAL
Nylon

COLOUR
(NA) Natural

NOTES
Available in other colours.

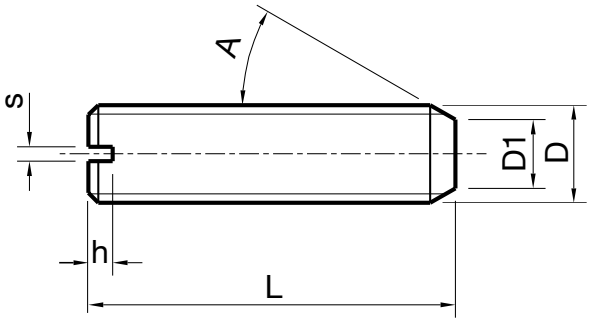

Code (NA)	D	Pitch	L	s (min)	h (min)	D1 (min)	A	Package (pcs)
05S6101002200	M10	1,5	22	1,6	4,1	6,64	15° ÷ 30°	1.000
05S6101002500	M10	1,5	25	1,6	4,1	6,64	15° ÷ 30°	1.000
05S6101002600	M10	1,5	26	1,6	4,1	6,64	15° ÷ 30°	1.000
05S6101002700	M10	1,5	27	1,6	4,1	6,64	15° ÷ 30°	1.000
05S6101003000	M10	1,5	30	1,6	4,1	6,64	15° ÷ 30°	1.000
05S6101003600	M10	1,5	36	1,6	4,1	6,64	15° ÷ 30°	1.000
05S6101003700	M10	1,5	37	1,6	4,1	6,64	15° ÷ 30°	1.000
05S6101004000	M10	1,5	40	1,6	4,1	6,64	15° ÷ 30°	1.000
05S6101005000	M10	1,5	50	1,6	4,1	6,64	15° ÷ 30°	1.000
05S6101005200	M10	1,5	52	1,6	4,1	6,64	15° ÷ 30°	1.000
05S6101200600	M12	1,75	6	2	4,4	8,14	15° ÷ 30°	1.000
05S6101201000	M12	1,75	10	2	4,4	8,14	15° ÷ 30°	1.000
05S6101201200	M12	1,75	12	2	4,4	8,14	15° ÷ 30°	1.000
05S6101201600	M12	1,75	16	2	4,4	8,14	15° ÷ 30°	1.000
05S6101202100	M12	1,75	21	2	4,4	8,14	15° ÷ 30°	1.000
05S6101202500	M12	1,75	25	2	4,4	8,14	15° ÷ 30°	1.000
05S6101203600	M12	1,75	36	2	4,4	8,14	15° ÷ 30°	1.000

STANDARD
Similar to DIN 913

MATERIAL
Nylon

COLOUR
(NA) Natural

NOTES
Available in other colours.

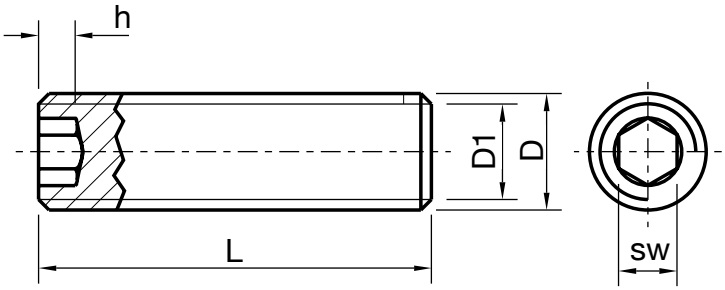

Code (NA)	D	Pitch	L	sw	h (min)	D1 (max)	Package (pcs)
00S6100500500	M5	0,8	5	2,5	2,8	3,5	1.000
00S6100500600	M5	0,8	6	2,5	2,8	3,5	1.000
00S6100500700	M5	0,8	7	2,5	2,8	3,5	1.000
00S6100500800	M5	0,8	8	2,5	2,8	3,5	1.000
00S6100500900	M5	0,8	9	2,5	2,8	3,5	1.000
00S6100501000	M5	0,8	10	2,5	2,8	3,5	1.000
00S6100501100	M5	0,8	11	2,5	2,8	3,5	1.000
00S6100501200	M5	0,8	12	2,5	2,8	3,5	1.000
00S6100501300	M5	0,8	13	2,5	2,8	3,5	1.000
00S6100501500	M5	0,8	15	2,5	2,8	3,5	1.000
00S6100501600	M5	0,8	16	2,5	2,8	3,5	1.000
00S6100501700	M5	0,8	17	2,5	2,8	3,5	1.000
00S6100501800	M5	0,8	18	2,5	2,8	3,5	1.000
00S6100502000	M5	0,8	20	2,5	2,8	3,5	1.000
00S6100502100	M5	0,8	21	2,5	2,8	3,5	1.000
00S6100502500	M5	0,8	25	2,5	2,8	3,5	1.000
00S6100502600	M5	0,8	26	2,5	2,8	3,5	1.000
00S6100503000	M5	0,8	30	2,5	2,8	3,5	1.000
00S6100503100	M5	0,8	31	2,5	2,8	3,5	1.000
00S6100503600	M5	0,8	36	2,5	2,8	3,5	1.000
00S6100504100	M5	0,8	41	2,5	2,8	3,5	1.000
00S6100504600	M5	0,8	46	2,5	2,8	3,5	1.000
00S6100505100	M5	0,8	51	2,5	2,8	3,5	1.000
00S6100600500	M6	1	5	3	2,9	4	1.000
00S6100600600	M6	1	6	3	2,9	4	1.000
00S6100600700	M6	1	7	3	2,9	4	1.000
00S6100600800	M6	1	8	3	2,9	4	1.000
00S6100600900	M6	1	9	3	2,9	4	1.000
00S6100601000	M6	1	10	3	2,9	4	1.000
00S6100601100	M6	1	11	3	2,9	4	1.000
00S6100601200	M6	1	12	3	2,9	4	1.000
00S6100601300	M6	1	13	3	2,9	4	1.000
00S6100601500	M6	1	15	3	2,9	4	1.000
00S6100601600	M6	1	16	3	2,9	4	1.000
00S6100601700	M6	1	17	3	2,9	4	1.000
00S6100601800	M6	1	18	3	2,9	4	1.000
00S6100602000	M6	1	20	3	2,9	4	1.000
00S6100602100	M6	1	21	3	2,9	4	1.000

STANDARD
Similar to DIN 913

MATERIAL
Nylon

COLOUR
(NA) Natural

NOTES
Available in other colours.

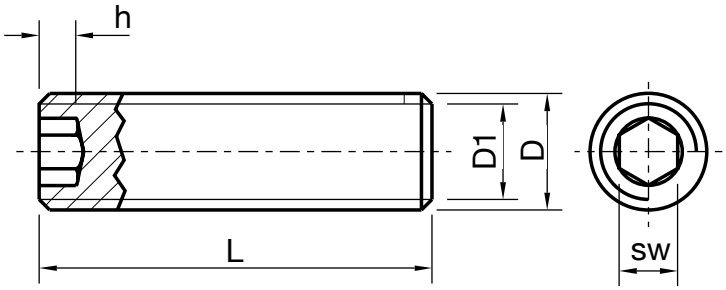

Code (NA)	D	Pitch	L	sw	h (min)	D1 (max)	Package (pcs)
00S6100602500	M6	1	25	3	2,9	4	1.000
00S6100602600	M6	1	26	3	2,9	4	1.000
00S6100603000	M6	1	30	3	2,9	4	1.000
00S6100603100	M6	1	31	3	2,9	4	1.000
00S6100603200	M6	1	32	3	2,9	4	1.000
00S6100603600	M6	1	36	3	2,9	4	1.000
00S6100604100	M6	1	41	3	2,9	4	1.000
00S6100604600	M6	1	46	3	2,9	4	1.000
00S6100605100	M6	1	51	3	2,9	4	1.000
00S6100605600	M6	1	56	3	2,9	4	1.000
00S6100800500	M8	1,25	5	4	5,6	5,5	1.000
00S6100800600	M8	1,25	6	4	5,6	5,5	1.000
00S6100800700	M8	1,25	7	4	5,6	5,5	1.000
00S6100800800	M8	1,25	8	4	5,6	5,5	1.000
00S6100800900	M8	1,25	9	4	5,6	5,5	1.000
00S6100801000	M8	1,25	10	4	5,6	5,5	1.000
00S6100801100	M8	1,25	11	4	5,6	5,5	1.000
00S6100801200	M8	1,25	12	4	5,6	5,5	1.000
00S6100801300	M8	1,25	13	4	5,6	5,5	1.000
00S6100801400	M8	1,25	14	4	5,6	5,5	1.000
00S6100801500	M8	1,25	15	4	5,6	5,5	1.000
00S6100801600	M8	1,25	16	4	5,6	5,5	1.000
00S6100801700	M8	1,25	17	4	5,6	5,5	1.000
00S6100801800	M8	1,25	18	4	5,6	5,5	1.000
00S6100801900	M8	1,25	19	4	5,6	5,5	1.000
00S6100802000	M8	1,25	20	4	5,6	5,5	1.000
00S6100802200	M8	1,25	22	4	5,6	5,5	1.000
00S6100802500	M8	1,25	25	4	5,6	5,5	1.000
00S6100802600	M8	1,25	26	4	5,6	5,5	1.000
00S6100802700	M8	1,25	27	4	5,6	5,5	1.000
00S6100803500	M8	1,25	35	4	5,6	5,5	1.000
00S6100804200	M8	1,25	42	4	5,6	5,5	1.000
00S6100804700	M8	1,25	47	4	5,6	5,5	1.000
00S6100805100	M8	1,25	51	4	5,6	5,5	1.000
00S6100805200	M8	1,25	52	4	5,6	5,5	1.000
00S6100806200	M8	1,25	62	4	5,6	5,5	1.000
00S6100806500	M8	1,25	65	4	5,6	5,5	1.000

Standard
Similar to DIN 84

MATERIAL
Nylon

COLOUR
(NA) Natural

NOTES
Available in other colours.

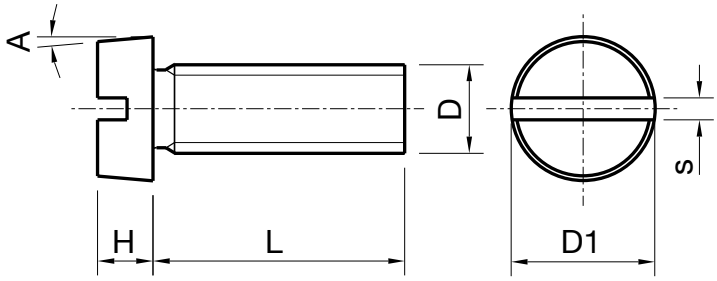

Code (NA)	D	Pitch	L	D1	H	s	A (max)	Package (pcs)
24S6400200400	M2	0,4	4	3,8	1,3	0,5	5°	1.000
24S6400200500	M2	0,4	5	3,8	1,3	0,5	5°	1.000
24S6400200600	M2	0,4	6	3,8	1,3	0,5	5°	1.000
24S6400200800	M2	0,4	8	3,8	1,3	0,5	5°	1.000
24S6400201000	M2	0,4	10	3,8	1,3	0,5	5°	1.000
24S6400201200	M2	0,4	12	3,8	1,3	0,5	5°	1.000
24S6400201600	M2	0,4	16	3,8	1,3	0,5	5°	1.000
24S6400202000	M2	0,4	20	3,8	1,3	0,5	5°	1.000
24S6400202500	M2	0,4	25	3,8	1,3	0,5	5°	1.000
24S6420500400	M2,5	0,45	4	4,5	1,6	0,6	5°	1.000
24S6420500500	M2,5	0,45	5	4,5	1,6	0,6	5°	1.000
24S6420500600	M2,5	0,45	6	4,5	1,6	0,6	5°	1.000
24S6420500800	M2,5	0,45	8	4,5	1,6	0,6	5°	1.000
24S6420501000	M2,5	0,45	10	4,5	1,6	0,6	5°	1.000
24S6420501200	M2,5	0,45	12	4,5	1,6	0,6	5°	1.000
24S6420501600	M2,5	0,45	16	4,5	1,6	0,6	5°	1.000
24S6420502000	M2,5	0,45	20	4,5	1,6	0,6	5°	1.000
24S6420502500	M2,5	0,45	25	4,5	1,6	0,6	5°	1.000
24S6400300400	M3	0,5	4	5,5	2	0,8	5°	1.000
24S6400300500	M3	0,5	5	5,5	2	0,8	5°	1.000
24S6400300600	M3	0,5	6	5,5	2	0,8	5°	1.000
24S6400300800	M3	0,5	8	5,5	2	0,8	5°	1.000
24S6400301000	M3	0,5	10	5,5	2	0,8	5°	1.000
24S6400301200	M3	0,5	12	5,5	2	0,8	5°	1.000
24S6400301400	M3	0,5	14	5,5	2	0,8	5°	1.000
24S6400301500	M3	0,5	15	5,5	2	0,8	5°	1.000
24S6400301600	M3	0,5	16	5,5	2	0,8	5°	1.000
24S6400301800	M3	0,5	18	5,5	2	0,8	5°	1.000
24S6400302000	M3	0,5	20	5,5	2	0,8	5°	1.000
24S6400302200	M3	0,5	22	5,5	2	0,8	5°	1.000
24S6400302500	M3	0,5	25	5,5	2	0,8	5°	1.000
24S6400302800	M3	0,5	28	5,5	2	0,8	5°	1.000
24S6400303000	M3	0,5	30	5,5	2	0,8	5°	1.000
24S6400303300	M3	0,5	33	5,5	2	0,8	5°	1.000
24S6400303500	M3	0,5	35	5,5	2	0,8	5°	1.000
24S6400304000	M3	0,5	40	5,5	2	0,8	5°	1.000
24S6400304500	M3	0,5	45	5,5	2	0,8	5°	1.000

STANDARD
Similar to DIN 84

MATERIAL
Nylon

COLOUR
(NA) Natural

NOTES
Available in other colours.

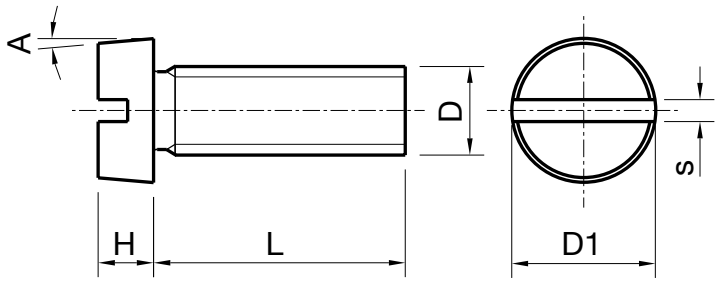

Code (NA)	D	Pitch	L	D1	H	s	A (max)	Package (pcs)
24S6400400400	M4	0,7	4	7	2,6	1	5°	1.000
24S6400400500	M4	0,7	5	7	2,6	1	5°	1.000
24S6400400600	M4	0,7	6	7	2,6	1	5°	1.000
24S6400400800	M4	0,7	8	7	2,6	1	5°	1.000
24S6400401000	M4	0,7	10	7	2,6	1	5°	1.000
24S6400401200	M4	0,7	12	7	2,6	1	5°	1.000
24S6400401300	M4	0,7	13	7	2,6	1	5°	1.000
24S6400401400	M4	0,7	14	7	2,6	1	5°	1.000
24S6400401500	M4	0,7	15	7	2,6	1	5°	1.000
24S6400401600	M4	0,7	16	7	2,6	1	5°	1.000
24S6400401800	M4	0,7	18	7	2,6	1	5°	1.000
24S6400402000	M4	0,7	20	7	2,6	1	5°	1.000
24S6400402300	M4	0,7	23	7	2,6	1	5°	1.000
24S6400402500	M4	0,7	25	7	2,6	1	5°	1.000
24S6400402800	M4	0,7	28	7	2,6	1	5°	1.000
24S6400403000	M4	0,7	30	7	2,6	1	5°	1.000
24S6400403500	M4	0,7	35	7	2,6	1	5°	1.000
24S6400404000	M4	0,7	40	7	2,6	1	5°	1.000
24S6400404500	M4	0,7	45	7	2,6	1	5°	1.000
24S6400405000	M4	0,7	50	7	2,6	1	5°	1.000
24S6400405500	M4	0,7	55	7	2,6	1	5°	1.000
24S6400406000	M4	0,7	60	7	2,6	1	5°	1.000
24S6400407000	M4	0,7	70	7	2,6	1	5°	1.000
24S6400500400	M5	0,8	4	8,5	3,3	1	5°	1.000
24S6400500600	M5	0,8	6	8,5	3,3	1	5°	1.000
24S6400500700	M5	0,8	7	8,5	3,3	1	5°	1.000
24S6400500800	M5	0,8	8	8,5	3,3	1	5°	1.000
24S6400500900	M5	0,8	9	8,5	3,3	1	5°	1.000
24S6400501000	M5	0,8	10	8,5	3,3	1	5°	1.000
24S6400501200	M5	0,8	12	8,5	3,3	1	5°	1.000
24S6400501300	M5	0,8	13	8,5	3,3	1	5°	1.000
24S6400501400	M5	0,8	14	8,5	3,3	1	5°	1.000
24S6400501500	M5	0,8	15	8,5	3,3	1	5°	1.000
24S6400501600	M5	0,8	16	8,5	3,3	1	5°	1.000
24S6400501700	M5	0,8	17	8,5	3,3	1	5°	1.000
24S6400502000	M5	0,8	20	8,5	3,3	1	5°	1.000

STANDARD
Similar to DIN 84

MATERIAL
Nylon

COLOUR
(NA) Natural

NOTES
Available in other colours.

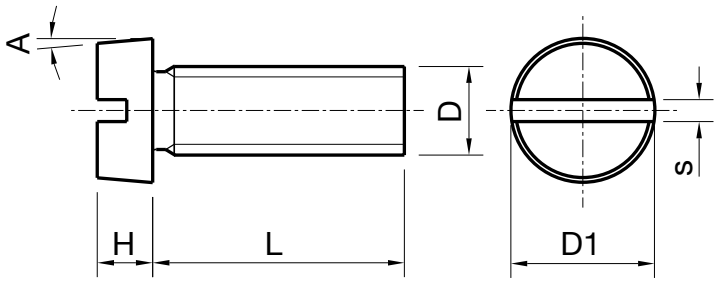

Code (NA)	D	Pitch	L	D1	H	s	A (max)	Package (pcs)
24S6400502500	M5	0,8	25	8,5	3,3	1	5°	1.000
24S6400503000	M5	0,8	30	8,5	3,3	1	5°	1.000
24S6400503500	M5	0,8	35	8,5	3,3	1	5°	1.000
24S6400504000	M5	0,8	40	8,5	3,3	1	5°	1.000
24S6400504500	M5	0,8	45	8,5	3,3	1	5°	1.000
24S6400505000	M5	0,8	50	8,5	3,3	1	5°	1.000
24S6400505500	M5	0,8	55	8,5	3,3	1	5°	1.000
24S6400506000	M5	0,8	60	8,5	3,3	1	5°	1.000
24S6400506500	M5	0,8	65	8,5	3,3	1	5°	1.000
24S6400507000	M5	0,8	70	8,5	3,3	1	5°	1.000
24S6400508000	M5	0,8	80	8,5	3,3	1	5°	1.000
24S6400600500	M6	1	5	10	3,9	1,6	5°	1.000
24S6400600600	M6	1	6	10	3,9	1,6	5°	1.000
24S6400600700	M6	1	7	10	3,9	1,6	5°	1.000
24S6400600800	M6	1	8	10	3,9	1,6	5°	1.000
24S6400601000	M6	1	10	10	3,9	1,6	5°	1.000
24S6400601200	M6	1	12	10	3,9	1,6	5°	1.000
24S6400601500	M6	1	15	10	3,9	1,6	5°	1.000
24S6400601600	M6	1	16	10	3,9	1,6	5°	1.000
24S6400601700	M6	1	17	10	3,9	1,6	5°	1.000
24S6400602000	M6	1	20	10	3,9	1,6	5°	1.000
24S6400602500	M6	1	25	10	3,9	1,6	5°	1.000
24S6400603000	M6	1	30	10	3,9	1,6	5°	1.000
24S6400603500	M6	1	35	10	3,9	1,6	5°	1.000
24S6400604000	M6	1	40	10	3,9	1,6	5°	1.000
24S6400604500	M6	1	45	10	3,9	1,6	5°	1.000
24S6400605000	M6	1	50	10	3,9	1,6	5°	1.000
24S6400605500	M6	1	55	10	3,9	1,6	5°	1.000
24S6400606000	M6	1	60	10	3,9	1,6	5°	1.000
24S6400607000	M6	1	70	10	3,9	1,6	5°	1.000
24S6400607500	M6	1	75	10	3,9	1,6	5°	1.000
24S6400608000	M6	1	80	10	3,9	1,6	5°	1.000
24S6400609000	M6	1	90	10	3,9	1,6	5°	1.000
24S6400610000	M6	1	100	10	3,9	1,6	5°	1.000
24S6400800400	M8	1,25	4	13	5	2	5°	1.000
24S6400800500	M8	1,25	5	13	5	2	5°	1.000

STANDARD
Similar to DIN 84

MATERIAL
Nylon

COLOUR
(NA) Natural

NOTES
Available in other colours.

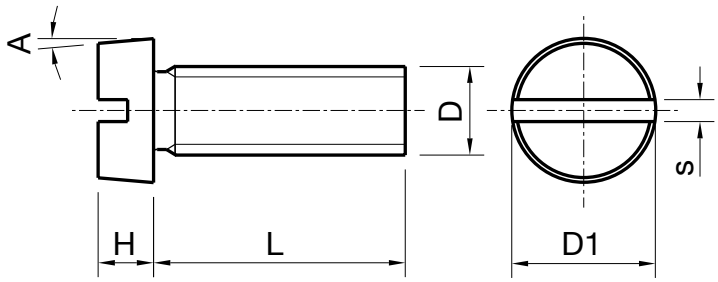

Code (NA)	D	Pitch	L	D1	H	s	A (max)	Package (pcs)
24S6400800600	M8	1,25	6	13	5	2	5°	1.000
24S6400800700	M8	1,25	7	13	5	2	5°	1.000
24S6400800800	M8	1,25	8	13	5	2	5°	1.000
24S6400800900	M8	1,25	9	13	5	2	5°	1.000
24S6400801000	M8	1,25	10	13	5	2	5°	1.000
24S6400801100	M8	1,25	11	13	5	2	5°	1.000
24S6400801200	M8	1,25	12	13	5	2	5°	1.000
24S6400801300	M8	1,25	13	13	5	2	5°	1.000
24S6400801500	M8	1,25	15	13	5	2	5°	1.000
24S6400801600	M8	1,25	16	13	5	2	5°	1.000
24S6400801700	M8	1,25	17	13	5	2	5°	1.000
24S6400801800	M8	1,25	18	13	5	2	5°	1.000
24S6400802000	M8	1,25	20	13	5	2	5°	1.000
24S6400802300	M8	1,25	23	13	5	2	5°	1.000
24S6400802500	M8	1,25	25	13	5	2	5°	1.000
24S6400802600	M8	1,25	26	13	5	2	5°	1.000
24S6400803000	M8	1,25	30	13	5	2	5°	1.000
24S6400803500	M8	1,25	35	13	5	2	5°	1.000
24S6400804000	M8	1,25	40	13	5	2	5°	1.000
24S6400804500	M8	1,25	45	13	5	2	5°	1.000
24S6400805000	M8	1,25	50	13	5	2	5°	1.000
24S6400805500	M8	1,25	55	13	5	2	5°	1.000
24S6400806000	M8	1,25	60	13	5	2	5°	1.000
24S6400806500	M8	1,25	65	13	5	2	5°	1.000
24S6400807000	M8	1,25	70	13	5	2	5°	1.000
24S6400807500	M8	1,25	75	13	5	2	5°	1.000
24S6400808000	M8	1,25	80	13	5	2	5°	1.000
24S6400809000	M8	1,25	90	13	5	2	5°	1.000
24S6400810000	M8	1,25	100	13	5	2	5°	1.000
24S6400811000	M8	1,25	110	13	5	2	5°	1.000
24S6401000400	M10	1,5	4	16	6	2,5	5°	1.000
24S6401000600	M10	1,5	6	16	6	2,5	5°	1.000
24S6401000700	M10	1,5	7	16	6	2,5	5°	1.000
24S6401000800	M10	1,5	8	16	6	2,5	5°	1.000
24S6401001000	M10	1,5	10	16	6	2,5	5°	1.000
24S6401001200	M10	1,5	12	16	6	2,5	5°	1.000

STANDARD
Similar to DIN 84

MATERIAL
Nylon

COLOUR
(NA) Natural

NOTES
Available in other colours.

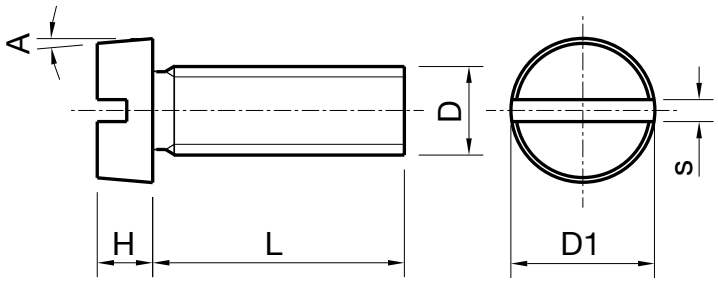

Code (NA)	D	Pitch	L	D1	H	s	A (max)	Package (pcs)
24S6401001300	M10	1,5	13	16	6	2,5	5°	1.000
24S6401001400	M10	1,5	14	16	6	2,5	5°	1.000
24S6401001500	M10	1,5	15	16	6	2,5	5°	1.000
24S6401001600	M10	1,5	16	16	6	2,5	5°	1.000
24S6401002000	M10	1,5	20	16	6	2,5	5°	1.000
24S6401002500	M10	1,5	25	16	6	2,5	5°	1.000
24S6401003000	M10	1,5	30	16	6	2,5	5°	1.000
24S6401003500	M10	1,5	35	16	6	2,5	5°	1.000
24S6401004000	M10	1,5	40	16	6	2,5	5°	1.000
24S6401004500	M10	1,5	45	16	6	2,5	5°	1.000
24S6401005000	M10	1,5	50	16	6	2,5	5°	1.000
24S6401005500	M10	1,5	55	16	6	2,5	5°	1.000
24S6401006000	M10	1,5	60	16	6	2,5	5°	1.000
24S6401006500	M10	1,5	65	16	6	2,5	5°	1.000
24S6401007000	M10	1,5	70	16	6	2,5	5°	1.000
24S6401008000	M10	1,5	80	16	6	2,5	5°	1.000
24S6401009000	M10	1,5	90	16	6	2,5	5°	1.000
24S6401010000	M10	1,5	100	16	6	2,5	5°	1.000
24S6401200900	M12	1,75	9	16	6	2,5	5°	1.000
24S6401201000	M12	1,75	10	16	6	2,5	5°	1.000
24S6401201100	M12	1,75	11	16	6	2,5	5°	1.000
24S6401201200	M12	1,75	12	16	6	2,5	5°	1.000
24S6401201500	M12	1,75	15	16	6	2,5	5°	1.000
24S6401202000	M12	1,75	20	16	6	2,5	5°	1.000
24S6401202500	M12	1,75	25	16	6	2,5	5°	1.000
24S6401203000	M12	1,75	30	16	6	2,5	5°	1.000
24S6401203500	M12	1,75	35	16	6	2,5	5°	1.000
24S6401204000	M12	1,75	40	16	6	2,5	5°	1.000
24S6401204500	M12	1,75	45	16	6	2,5	5°	1.000
24S6401205000	M12	1,75	50	16	6	2,5	5°	1.000
24S6401206000	M12	1,75	60	16	6	2,5	5°	1.000
24S6401207000	M12	1,75	70	16	6	2,5	5°	1.000
24S6401207500	M12	1,75	75	16	6	2,5	5°	1.000
24S6401208000	M12	1,75	80	16	6	2,5	5°	1.000
24S6401210000	M12	1,75	100	16	6	2,5	5°	1.000

STANDARD
Similar to DIN 963

MATERIAL
Nylon

COLOUR
(NA) Natural

NOTES
Available in other colours.

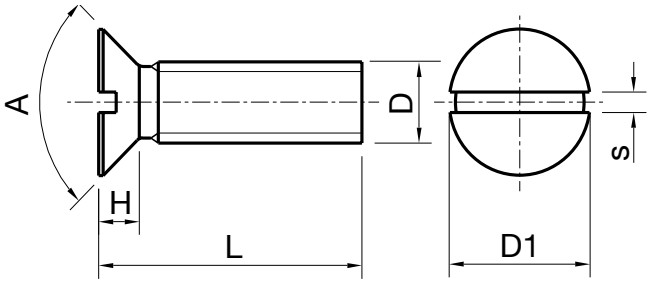

Code (NA)	D	Pitch	L	D1	H	s	A	Package (pcs)
25S6400200400	M2	0,4	4	3,8	0,8	0,5	90°	1.000
25S6400200500	M2	0,4	5	3,8	0,8	0,5	90°	1.000
25S6400200600	M2	0,4	6	3,8	0,8	0,5	90°	1.000
25S6400200800	M2	0,4	8	3,8	0,8	0,5	90°	1.000
25S6400201000	M2	0,4	10	3,8	0,8	0,5	90°	1.000
25S6400201100	M2	0,4	11	3,8	0,8	0,5	90°	1.000
25S6400201200	M2	0,4	12	3,8	0,8	0,5	90°	1.000
25S6400201600	M2	0,4	16	3,8	0,8	0,5	90°	1.000
25S6400202500	M2	0,4	25	3,8	0,8	0,5	90°	1.000
25S6420500400	M2,5	0,45	4	4,7	1,5	0,6	90°	1.000
25S6420500500	M2,5	0,45	5	4,7	1,5	0,6	90°	1.000
25S6420500600	M2,5	0,45	6	4,7	1,5	0,6	90°	1.000
25S6420500800	M2,5	0,45	8	4,7	1,5	0,6	90°	1.000
25S6420501000	M2,5	0,45	10	4,7	1,5	0,6	90°	1.000
25S6420501200	M2,5	0,45	12	4,7	1,5	0,6	90°	1.000
25S6420501600	M2,5	0,45	16	4,7	1,5	0,6	90°	1.000
25S6420502000	M2,5	0,45	20	4,7	1,5	0,6	90°	1.000
25S6420502500	M2,5	0,45	25	4,7	1,5	0,6	90°	1.000
25S6400300500	M3	0,5	5	5,6	1,65	0,8	90°	1.000
25S6400300600	M3	0,5	6	5,6	1,65	0,8	90°	1.000
25S6400300800	M3	0,5	8	5,6	1,65	0,8	90°	1.000
25S6400301000	M3	0,5	10	5,6	1,65	0,8	90°	1.000
25S6400301200	M3	0,5	12	5,6	1,65	0,8	90°	1.000
25S6400301400	M3	0,5	14	5,6	1,65	0,8	90°	1.000
25S6400301600	M3	0,5	16	5,6	1,65	0,8	90°	1.000
25S6400301700	M3	0,5	17	5,6	1,65	0,8	90°	1.000
25S6400301800	M3	0,5	18	5,6	1,65	0,8	90°	1.000
25S6400301900	M3	0,5	19	5,6	1,65	0,8	90°	1.000
25S6400302000	M3	0,5	20	5,6	1,65	0,8	90°	1.000
25S6400302200	M3	0,5	22	5,6	1,65	0,8	90°	1.000
25S6400302400	M3	0,5	24	5,6	1,65	0,8	90°	1.000
25S6400302500	M3	0,5	25	5,6	1,65	0,8	90°	1.000
25S6400302700	M3	0,5	27	5,6	1,65	0,8	90°	1.000
25S6400302900	M3	0,5	29	5,6	1,65	0,8	90°	1.000
25S6400303000	M3	0,5	30	5,6	1,65	0,8	90°	1.000
25S6400303200	M3	0,5	32	5,6	1,65	0,8	90°	1.000

STANDARD
Similar to DIN 963

MATERIAL
Nylon

COLOUR
(NA) Natural

NOTES
Available in other colours.

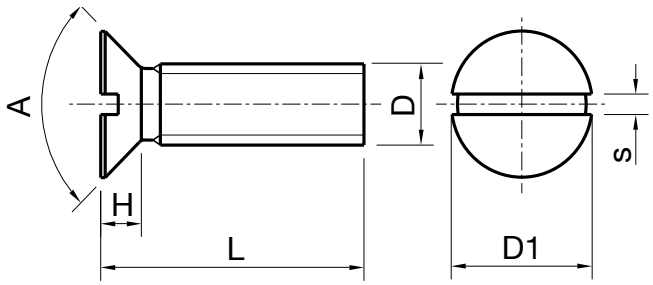

Code (NA)	D	Pitch	L	D1	H	s	A	Package (pcs)
25S6400303400	M3	0,5	34	5,6	1,65	0,8	90°	1.000
25S6400303500	M3	0,5	35	5,6	1,65	0,8	90°	1.000
25S6400303700	M3	0,5	37	5,6	1,65	0,8	90°	1.000
25S6400304200	M3	0,5	42	5,6	1,65	0,8	90°	1.000
25S6400304400	M3	0,5	44	5,6	1,65	0,8	90°	1.000
25S6400400400	M4	0,7	4	7,5	2,2	1	90°	1.000
25S6400400600	M4	0,7	6	7,5	2,2	1	90°	1.000
25S6400400700	M4	0,7	7	7,5	2,2	1	90°	1.000
25S6400400800	M4	0,7	8	7,5	2,2	1	90°	1.000
25S6400401000	M4	0,7	10	7,5	2,2	1	90°	1.000
25S6400401200	M4	0,7	12	7,5	2,2	1	90°	1.000
25S6400401400	M4	0,7	14	7,5	2,2	1	90°	1.000
25S6400401500	M4	0,7	15	7,5	2,2	1	90°	1.000
25S6400401600	M4	0,7	16	7,5	2,2	1	90°	1.000
25S6400401700	M4	0,7	17	7,5	2,2	1	90°	1.000
25S6400401800	M4	0,7	18	7,5	2,2	1	90°	1.000
25S6400402000	M4	0,7	20	7,5	2,2	1	90°	1.000
25S6400402200	M4	0,7	22	7,5	2,2	1	90°	1.000
25S6400402500	M4	0,7	25	7,5	2,2	1	90°	1.000
25S6400402700	M4	0,7	27	7,5	2,2	1	90°	1.000
25S6400403000	M4	0,7	30	7,5	2,2	1	90°	1.000
25S6400403200	M4	0,7	32	7,5	2,2	1	90°	1.000
25S6400403500	M4	0,7	35	7,5	2,2	1	90°	1.000
25S6400404000	M4	0,7	40	7,5	2,2	1	90°	1.000
25S6400404200	M4	0,7	42	7,5	2,2	1	90°	1.000
25S6400407000	M4	0,7	70	7,5	2,2	1	90°	1.000
25S6400407200	M4	0,7	72	7,5	2,2	1	90°	1.000
25S6400500700	M5	0,8	7	9,2	2,5	1,2	90°	1.000
25S6400500800	M5	0,8	8	9,2	2,5	1,2	90°	1.000
25S6400500900	M5	0,8	9	9,2	2,5	1,2	90°	1.000
25S6400501000	M5	0,8	10	9,2	2,5	1,2	90°	1.000
25S6400501100	M5	0,8	11	9,2	2,5	1,2	90°	1.000
25S6400501200	M5	0,8	12	9,2	2,5	1,2	90°	1.000
25S6400501300	M5	0,8	13	9,2	2,5	1,2	90°	1.000
25S6400501400	M5	0,8	14	9,2	2,5	1,2	90°	1.000
25S6400501500	M5	0,8	15	9,2	2,5	1,2	90°	1.000

STANDARD
Similar to DIN 963

MATERIAL
Nylon

COLOUR
(NA) Natural

NOTES
Available in other colours.

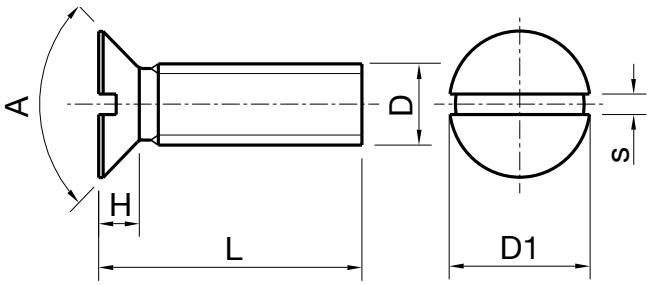

Code (NA)	D	Pitch	L	D1	H	s	A	Package (pcs)
25S6400501600	M5	0,8	16	9,2	2,5	1,2	90°	1.000
25S6400501700	M5	0,8	17	9,2	2,5	1,2	90°	1.000
25S6400501800	M5	0,8	18	9,2	2,5	1,2	90°	1.000
25S6400501900	M5	0,8	19	9,2	2,5	1,2	90°	1.000
25S6400502000	M5	0,8	20	9,2	2,5	1,2	90°	1.000
25S6400502100	M5	0,8	21	9,2	2,5	1,2	90°	1.000
25S6400502200	M5	0,8	22	9,2	2,5	1,2	90°	1.000
25S6400502300	M5	0,8	23	9,2	2,5	1,2	90°	1.000
25S6400502500	M5	0,8	25	9,2	2,5	1,2	90°	1.000
25S6400503000	M5	0,8	30	9,2	2,5	1,2	90°	1.000
25S6400503300	M5	0,8	33	9,2	2,5	1,2	90°	1.000
25S6400503500	M5	0,8	35	9,2	2,5	1,2	90°	1.000
25S6400503800	M5	0,8	38	9,2	2,5	1,2	90°	1.000
25S6400504000	M5	0,8	40	9,2	2,5	1,2	90°	1.000
25S6400504300	M5	0,8	43	9,2	2,5	1,2	90°	1.000
25S6400504500	M5	0,8	45	9,2	2,5	1,2	90°	1.000
25S6400504800	M5	0,8	48	9,2	2,5	1,2	90°	1.000
25S6400505000	M5	0,8	50	9,2	2,5	1,2	90°	1.000
25S6400505300	M5	0,8	53	9,2	2,5	1,2	90°	1.000
25S6400505500	M5	0,8	55	9,2	2,5	1,2	90°	1.000
25S6400506300	M5	0,8	63	9,2	2,5	1,2	90°	1.000
25S6400508300	M5	0,8	83	9,2	2,5	1,2	90°	1.000
25S6400600800	M6	1	8	11	2,75	1,6	90°	1.000
25S6400601000	M6	1	10	11	2,75	1,6	90°	1.000
25S6400601100	M6	1	11	11	2,75	1,6	90°	1.000
25S6400601200	M6	1	12	11	2,75	1,6	90°	1.000
25S6400601300	M6	1	13	11	2,75	1,6	90°	1.000
25S6400601500	M6	1	15	11	2,75	1,6	90°	1.000
25S6400601600	M6	1	16	11	2,75	1,6	90°	1.000
25S6400601700	M6	1	17	11	2,75	1,6	90°	1.000
25S6400601900	M6	1	19	11	2,75	1,6	90°	1.000
25S6400602000	M6	1	20	11	2,75	1,6	90°	1.000
25S6400602100	M6	1	21	11	2,75	1,6	90°	1.000
25S6400602200	M6	1	22	11	2,75	1,6	90°	1.000
25S6400602500	M6	1	25	11	2,75	1,6	90°	1.000
25S6400603000	M6	1	30	11	2,75	1,6	90°	1.000

STANDARD
Similar to DIN 963

MATERIAL
Nylon

COLOUR
(NA) Natural

NOTES
Available in other colours.

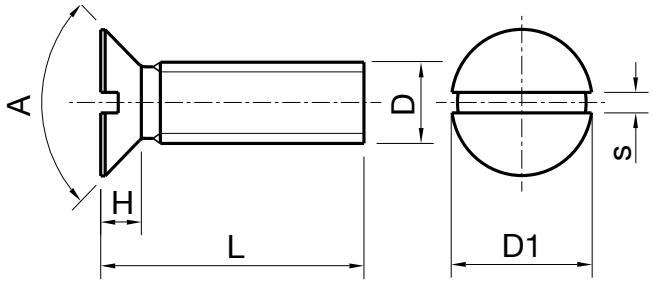

Code (NA)	D	Pitch	L	D1	H	s	A	Package (pcs)
25S6400603500	M6	1	35	11	2,75	1,6	90°	1.000
25S6400604000	M6	1	40	11	2,75	1,6	90°	1.000
25S6400604500	M6	1	45	11	2,75	1,6	90°	1.000
25S6400605000	M6	1	50	11	2,75	1,6	90°	1.000
25S6400605500	M6	1	55	11	2,75	1,6	90°	1.000
25S6400606000	M6	1	60	11	2,75	1,6	90°	1.000
25S6400606500	M6	1	65	11	2,75	1,6	90°	1.000
25S6400607500	M6	1	75	11	2,75	1,6	90°	1.000
25S6400608000	M6	1	80	11	2,75	1,6	90°	1.000
25S6400608500	M6	1	85	11	2,75	1,6	90°	1.000
25S6400801000	M8	1,25	10	14,5	3,4	2	90°	1.000
25S6400801200	M8	1,25	12	14,5	3,4	2	90°	1.000
25S6400801300	M8	1,25	13	14,5	3,4	2	90°	1.000
25S6400801400	M8	1,25	14	14,5	3,4	2	90°	1.000
25S6400801500	M8	1,25	15	14,5	3,4	2	90°	1.000
25S6400801600	M8	1,25	16	14,5	3,4	2	90°	1.000
25S6400801700	M8	1,25	17	14,5	3,4	2	90°	1.000
25S6400801800	M8	1,25	18	14,5	3,4	2	90°	1.000
25S6400802000	M8	1,25	20	14,5	3,4	2	90°	1.000
25S6400802100	M8	1,25	21	14,5	3,4	2	90°	1.000
25S6400802200	M8	1,25	22	14,5	3,4	2	90°	1.000
25S6400802500	M8	1,25	25	14,5	3,4	2	90°	1.000
25S6400802800	M8	1,25	28	14,5	3,4	2	90°	1.000
25S6400803000	M8	1,25	30	14,5	3,4	2	90°	1.000
25S6400803500	M8	1,25	35	14,5	3,4	2	90°	1.000
25S6400804000	M8	1,25	40	14,5	3,4	2	90°	1.000
25S6400804500	M8	1,25	45	14,5	3,4	2	90°	1.000
25S6400805000	M8	1,25	50	14,5	3,4	2	90°	1.000
25S6400805500	M8	1,25	55	14,5	3,4	2	90°	1.000
25S6400806000	M8	1,25	60	14,5	3,4	2	90°	1.000
25S6400806500	M8	1,25	65	14,5	3,4	2	90°	1.000
25S6400807000	M8	1,25	70	14,5	3,4	2	90°	1.000
25S6400807500	M8	1,25	75	14,5	3,4	2	90°	1.000
25S6400808000	M8	1,25	80	14,5	3,4	2	90°	1.000
25S6400808500	M8	1,25	85	14,5	3,4	2	90°	1.000
25S6401001000	M10	1,5	10	18	4,3	2,5	90°	1.000

STANDARD
Similar to DIN 963

MATERIAL
Nylon

COLOUR
(NA) Natural

NOTES
Available in other colours.

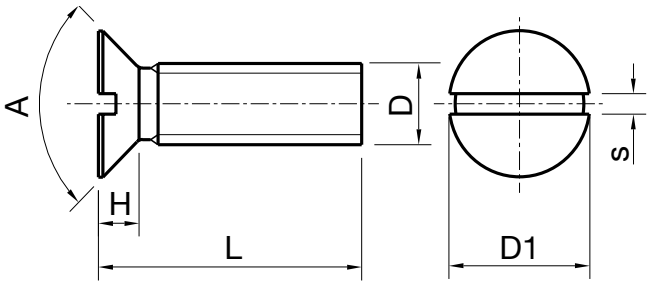

Code (NA)	D	Pitch	L	D1	H	s	A	Package (pcs)
25S6401001100	M10	1,5	11	18	4,3	2,5	90°	1.000
25S6401001200	M10	1,5	12	18	4,3	2,5	90°	1.000
25S6401001300	M10	1,5	13	18	4,3	2,5	90°	1.000
25S6401001500	M10	1,5	15	18	4,3	2,5	90°	1.000
25S6401001600	M10	1,5	16	18	4,3	2,5	90°	1.000
25S6401001800	M10	1,5	18	18	4,3	2,5	90°	1.000
25S6401002000	M10	1,5	20	18	4,3	2,5	90°	1.000
25S6401002500	M10	1,5	25	18	4,3	2,5	90°	1.000
25S6401003000	M10	1,5	30	18	4,3	2,5	90°	1.000
25S6401003500	M10	1,5	35	18	4,3	2,5	90°	1.000
25S6401004000	M10	1,5	40	18	4,3	2,5	90°	1.000
25S6401004500	M10	1,5	45	18	4,3	2,5	90°	1.000
25S6401005000	M10	1,5	50	18	4,3	2,5	90°	1.000
25S6401005500	M10	1,5	55	18	4,3	2,5	90°	1.000
25S6401006000	M10	1,5	60	18	4,3	2,5	90°	1.000
25S6401006500	M10	1,5	65	18	4,3	2,5	90°	1.000
25S6401007000	M10	1,5	70	18	4,3	2,5	90°	1.000
25S6401008000	M10	1,5	80	18	4,3	2,5	90°	1.000

STANDARD
Similar to DIN 964

MATERIAL
Nylon

COLOUR
(NA) Natural

NOTES
Available in other colours.

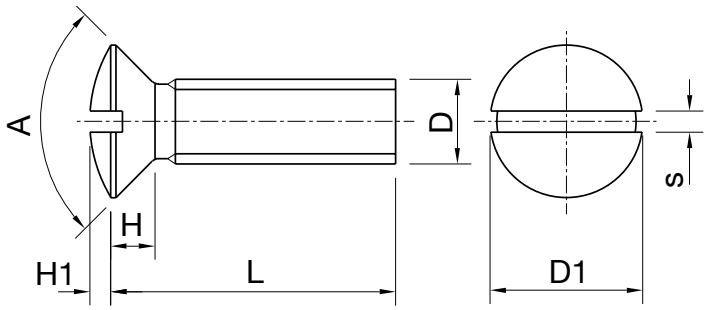

Code (NA)	D	Pitch	L	D1 (max)	H (max)	H1	s	A	Package (pcs)
26S6400200400	M2	0,4	4	4	0,7	0,8	0,5	90°	1.000
26S6400200500	M2	0,4	5	4	0,7	0,8	0,5	90°	1.000
26S6400200600	M2	0,4	6	4	0,7	0,8	0,5	90°	1.000
26S6400200800	M2	0,4	8	4	0,7	0,8	0,5	90°	1.000
26S6400201000	M2	0,4	10	4	0,7	0,8	0,5	90°	1.000
26S6400201100	M2	0,4	11	4	0,7	0,8	0,5	90°	1.000
26S6400201200	M2	0,4	12	4	0,7	0,8	0,5	90°	1.000
26S6400201600	M2	0,4	16	4	0,7	0,8	0,5	90°	1.000
26S6400202500	M2	0,4	25	4	0,7	0,8	0,5	90°	1.000
26S6420500400	M2,5	0,45	4	5	1	1,1	0,6	90°	1.000
26S6420500500	M2,5	0,45	5	5	1	1,1	0,6	90°	1.000
26S6420500600	M2,5	0,45	6	5	1	1,1	0,6	90°	1.000
26S6420500800	M2,5	0,45	8	5	1	1,1	0,6	90°	1.000
26S6420501000	M2,5	0,45	10	5	1	1,1	0,6	90°	1.000
26S6420501200	M2,5	0,45	12	5	1	1,1	0,6	90°	1.000
26S6420501600	M2,5	0,45	16	5	1	1,1	0,6	90°	1.000
26S6420502000	M2,5	0,45	20	5	1	1,1	0,6	90°	1.000
26S6420502500	M2,5	0,45	25	5	1	1,1	0,6	90°	1.000
26S6400300500	M3	0,5	5	5,5	1,65	0,75	0,8	90°	1.000
26S6400300600	M3	0,5	6	5,5	1,65	0,75	0,8	90°	1.000
26S6400300800	M3	0,5	8	5,5	1,65	0,75	0,8	90°	1.000
26S6400301000	M3	0,5	10	5,5	1,65	0,75	0,8	90°	1.000
26S6400301200	M3	0,5	12	5,5	1,65	0,75	0,8	90°	1.000
26S6400301400	M3	0,5	14	5,5	1,65	0,75	0,8	90°	1.000
26S6400301600	M3	0,5	16	5,5	1,65	0,75	0,8	90°	1.000
26S6400301700	M3	0,5	17	5,5	1,65	0,75	0,8	90°	1.000
26S6400301800	M3	0,5	18	5,5	1,65	0,75	0,8	90°	1.000
26S6400301900	M3	0,5	19	5,5	1,65	0,75	0,8	90°	1.000
26S6400302000	M3	0,5	20	5,5	1,65	0,75	0,8	90°	1.000
26S6400302200	M3	0,5	22	5,5	1,65	0,75	0,8	90°	1.000
26S6400302400	M3	0,5	24	5,5	1,65	0,75	0,8	90°	1.000
26S6400302500	M3	0,5	25	5,5	1,65	0,75	0,8	90°	1.000
26S6400302700	M3	0,5	27	5,5	1,65	0,75	0,8	90°	1.000
26S6400302900	M3	0,5	29	5,5	1,65	0,75	0,8	90°	1.000
26S6400303000	M3	0,5	30	5,5	1,65	0,75	0,8	90°	1.000
26S6400303200	M3	0,5	32	5,5	1,65	0,75	0,8	90°	1.000
26S6400303400	M3	0,5	34	5,5	1,65	0,75	0,8	90°	1.000
26S6400303500	M3	0,5	35	5,5	1,65	0,75	0,8	90°	1.000

STANDARD
Similar to DIN 964

MATERIAL
Nylon

COLOUR
(NA) Natural

NOTES
Available in other colours.

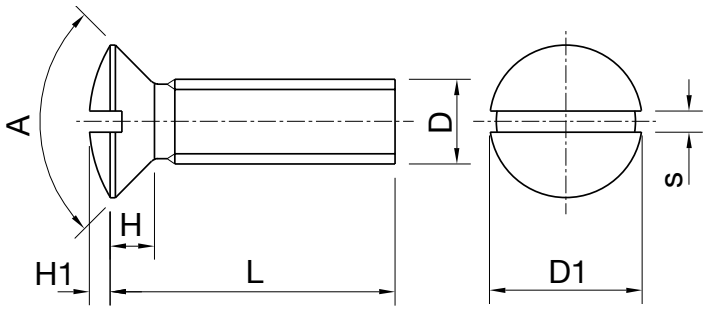

Code (NA)	D	Pitch	L	D1 (max)	H (max)	H1	s	A	Package (pcs)
26S6400303700	M3	0,5	37	5,5	1,65	0,75	0,8	90°	1.000
26S6400304200	M3	0,5	42	5,5	1,65	0,75	0,8	90°	1.000
26S6400304400	M3	0,5	44	5,5	1,65	0,75	0,8	90°	1.000
26S6400400400	M4	0,7	4	7,5	2,2	1	1	90°	1.000
26S6400400600	M4	0,7	6	7,5	2,2	1	1	90°	1.000
26S6400400700	M4	0,7	7	7,5	2,2	1	1	90°	1.000
26S6400400800	M4	0,7	8	7,5	2,2	1	1	90°	1.000
26S6400401000	M4	0,7	10	7,5	2,2	1	1	90°	1.000
26S6400401200	M4	0,7	12	7,5	2,2	1	1	90°	1.000
26S6400401400	M4	0,7	14	7,5	2,2	1	1	90°	1.000
26S6400401500	M4	0,7	15	7,5	2,2	1	1	90°	1.000
26S6400401600	M4	0,7	16	7,5	2,2	1	1	90°	1.000
26S6400401700	M4	0,7	17	7,5	2,2	1	1	90°	1.000
26S6400401800	M4	0,7	18	7,5	2,2	1	1	90°	1.000
26S6400402000	M4	0,7	20	7,5	2,2	1	1	90°	1.000
26S6400402200	M4	0,7	22	7,5	2,2	1	1	90°	1.000
26S6400402500	M4	0,7	25	7,5	2,2	1	1	90°	1.000
26S6400402700	M4	0,7	27	7,5	2,2	1	1	90°	1.000
26S6400403000	M4	0,7	30	7,5	2,2	1	1	90°	1.000
26S6400403200	M4	0,7	32	7,5	2,2	1	1	90°	1.000
26S6400403500	M4	0,7	35	7,5	2,2	1	1	90°	1.000
26S6400404000	M4	0,7	40	7,5	2,2	1	1	90°	1.000
26S6400404200	M4	0,7	42	7,5	2,2	1	1	90°	1.000
26S6400407200	M4	0,7	72	7,5	2,2	1	1	90°	1.000
26S6400500700	M5	0,8	7	9,5	2,5	1,2	1,2	90°	1.000
26S6400500800	M5	0,8	8	9,5	2,5	1,2	1,2	90°	1.000
26S6400500900	M5	0,8	9	9,5	2,5	1,2	1,2	90°	1.000
26S6400501000	M5	0,8	10	9,5	2,5	1,2	1,2	90°	1.000
26S6400501100	M5	0,8	11	9,5	2,5	1,2	1,2	90°	1.000
26S6400501200	M5	0,8	12	9,5	2,5	1,2	1,2	90°	1.000
26S6400501300	M5	0,8	13	9,5	2,5	1,2	1,2	90°	1.000
26S6400501400	M5	0,8	14	9,5	2,5	1,2	1,2	90°	1.000
26S6400501500	M5	0,8	15	9,5	2,5	1,2	1,2	90°	1.000
26S6400501600	M5	0,8	16	9,5	2,5	1,2	1,2	90°	1.000
26S6400501700	M5	0,8	17	9,5	2,5	1,2	1,2	90°	1.000
26S6400501800	M5	0,8	18	9,5	2,5	1,2	1,2	90°	1.000
26S6400501900	M5	0,8	19	9,5	2,5	1,2	1,2	90°	1.000
26S6400502000	M5	0,8	20	9,5	2,5	1,2	1,2	90°	1.000

STANDARD
Similar to DIN 964

MATERIAL
Nylon

COLOUR
(NA) Natural

NOTES
Available in other colours.

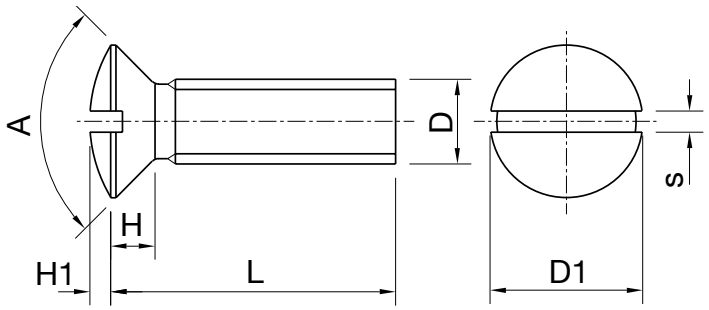

Code (NA)	D	Pitch	L	D1 (max)	H (max)	H1	s	A	Package (pcs)
26S6400502100	M5	0,8	21	9,5	2,5	1,2	1,2	90°	1.000
26S6400502200	M5	0,8	22	9,5	2,5	1,2	1,2	90°	1.000
26S6400502300	M5	0,8	23	9,5	2,5	1,2	1,2	90°	1.000
26S6400502500	M5	0,8	25	9,5	2,5	1,2	1,2	90°	1.000
26S6400503000	M5	0,8	30	9,5	2,5	1,2	1,2	90°	1.000
26S6400503300	M5	0,8	33	9,5	2,5	1,2	1,2	90°	1.000
26S6400503500	M5	0,8	35	9,5	2,5	1,2	1,2	90°	1.000
26S6400503800	M5	0,8	38	9,5	2,5	1,2	1,2	90°	1.000
26S6400504000	M5	0,8	40	9,5	2,5	1,2	1,2	90°	1.000
26S6400504300	M5	0,8	43	9,5	2,5	1,2	1,2	90°	1.000
26S6400504500	M5	0,8	45	9,5	2,5	1,2	1,2	90°	1.000
26S6400504800	M5	0,8	48	9,5	2,5	1,2	1,2	90°	1.000
26S6400505000	M5	0,8	50	9,5	2,5	1,2	1,2	90°	1.000
26S6400505300	M5	0,8	53	9,5	2,5	1,2	1,2	90°	1.000
26S6400505500	M5	0,8	55	9,5	2,5	1,2	1,2	90°	1.000
26S6400506300	M5	0,8	63	9,5	2,5	1,2	1,2	90°	1.000
26S6400508300	M5	0,8	83	9,5	2,5	1,2	1,2	90°	1.000
26S6400600800	M6	1	8	11	3	1,5	1,6	90°	1.000
26S6400601000	M6	1	10	11	3	1,5	1,6	90°	1.000
26S6400601100	M6	1	11	11	3	1,5	1,6	90°	1.000
26S6400601200	M6	1	12	11	3	1,5	1,6	90°	1.000
26S6400601300	M6	1	13	11	3	1,5	1,6	90°	1.000
26S6400601500	M6	1	15	11	3	1,5	1,6	90°	1.000
26S6400601600	M6	1	16	11	3	1,5	1,6	90°	1.000
26S6400601700	M6	1	17	11	3	1,5	1,6	90°	1.000
26S6400601900	M6	1	19	11	3	1,5	1,6	90°	1.000
26S6400602000	M6	1	20	11	3	1,5	1,6	90°	1.000
26S6400602100	M6	1	21	11	3	1,5	1,6	90°	1.000
26S6400602200	M6	1	22	11	3	1,5	1,6	90°	1.000
26S6400602500	M6	1	25	11	3	1,5	1,6	90°	1.000
26S6400603000	M6	1	30	11	3	1,5	1,6	90°	1.000
26S6400603500	M6	1	35	11	3	1,5	1,6	90°	1.000
26S6400604000	M6	1	40	11	3	1,5	1,6	90°	1.000
26S6400604500	M6	1	45	11	3	1,5	1,6	90°	1.000
26S6400605000	M6	1	50	11	3	1,5	1,6	90°	1.000
26S6400605500	M6	1	55	11	3	1,5	1,6	90°	1.000
26S6400606000	M6	1	60	11	3	1,5	1,6	90°	1.000
26S6400606500	M6	1	65	11	3	1,5	1,6	90°	1.000

STANDARD
Similar to DIN 964

MATERIAL
Nylon

COLOUR
(NA) Natural

NOTES
Available in other colours.

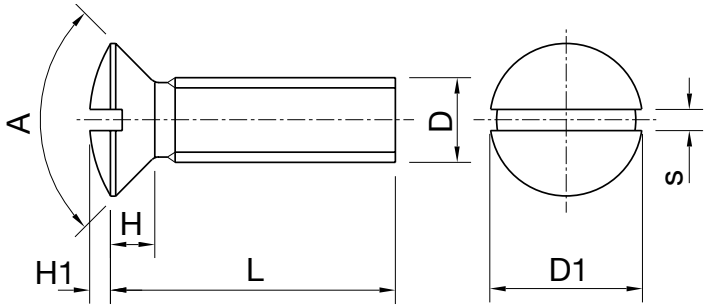

Code (NA)	D	Pitch	L	D1 (max)	H (max)	H1	s	A	Package (pcs)
26S6400607500	M6	1	75	11	3	1,5	1,6	90°	1.000
26S6400608000	M6	1	80	11	3	1,5	1,6	90°	1.000
26S6400801000	M8	1,25	10	14	-	-	2	90°	1.000
26S6400801200	M8	1,25	12	14	-	-	2	90°	1.000
26S6400801300	M8	1,25	13	14	-	-	2	90°	1.000
26S6400801400	M8	1,25	14	14	-	-	2	90°	1.000
26S6400801500	M8	1,25	15	14	-	-	2	90°	1.000
26S6400801600	M8	1,25	16	14	-	-	2	90°	1.000
26S6400801700	M8	1,25	17	14	-	-	2	90°	1.000
26S6400801800	M8	1,25	18	14	-	-	2	90°	1.000
26S6400802000	M8	1,25	20	14	-	-	2	90°	1.000
26S6400802100	M8	1,25	21	14	-	-	2	90°	1.000
26S6400802200	M8	1,25	22	14	-	-	2	90°	1.000
26S6400802500	M8	1,25	25	14	-	-	2	90°	1.000
26S6400802800	M8	1,25	28	14	-	-	2	90°	1.000
26S6400803000	M8	1,25	30	14	-	-	2	90°	1.000
26S6400803500	M8	1,25	35	14	-	-	2	90°	1.000
26S6400804000	M8	1,25	40	14	-	-	2	90°	1.000
26S6400804500	M8	1,25	45	14	-	-	2	90°	1.000
26S6400805000	M8	1,25	50	14	-	-	2	90°	1.000
26S6400805500	M8	1,25	55	14	-	-	2	90°	1.000
26S6400806000	M8	1,25	60	14	-	-	2	90°	1.000
26S6400806500	M8	1,25	65	14	-	-	2	90°	1.000
26S6400807000	M8	1,25	70	14	-	-	2	90°	1.000
26S6400807500	M8	1,25	75	14	-	-	2	90°	1.000
26S6400808000	M8	1,25	80	14	-	-	2	90°	1.000

STANDARD
Similar to DIN 7985

MATERIAL
Nylon

COLOUR
(NA) Natural

NOTES
Available in other colours.

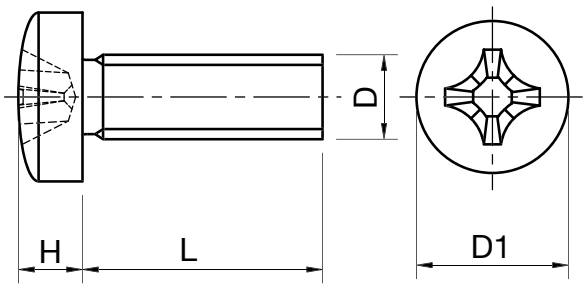

Code (NA)	D	Pitch	L	D1 (max)	H (max)	Imprint PH	Package (pcs)
24S6000200400	M2	0,4	4	4	1,6	1	1.000
24S6000200500	M2	0,4	5	4	1,6	1	1.000
24S6000200600	M2	0,4	6	4	1,6	1	1.000
24S6000200800	M2	0,4	8	4	1,6	1	1.000
24S6000201000	M2	0,4	10	4	1,6	1	1.000
24S6000201200	M2	0,4	12	4	1,6	1	1.000
24S6000201600	M2	0,4	16	4	1,6	1	1.000
24S6000202000	M2	0,4	20	4	1,6	1	1.000
24S6000202500	M2	0,4	25	4	1,6	1	1.000
24S6020500400	M2,5	0,45	4	5	2	1	1.000
24S6020500500	M2,5	0,45	5	5	2	1	1.000
24S6020500600	M2,5	0,45	6	5	2	1	1.000
24S6020500800	M2,5	0,45	8	5	2	1	1.000
24S6020501000	M2,5	0,45	10	5	2	1	1.000
24S6020501200	M2,5	0,45	12	5	2	1	1.000
24S6020501600	M2,5	0,45	16	5	2	1	1.000
24S6020502000	M2,5	0,45	20	5	2	1	1.000
24S6020502500	M2,5	0,45	25	5	2	1	1.000
24S6000300400	M3	0,5	4	6	2,4	1	1.000
24S6000300500	M3	0,5	5	6	2,4	1	1.000
24S6000300600	M3	0,5	6	6	2,4	1	1.000
24S6000300800	M3	0,5	8	6	2,4	1	1.000
24S6000301000	M3	0,5	10	6	2,4	1	1.000
24S6000301200	M3	0,5	12	6	2,4	1	1.000
24S6000301400	M3	0,5	14	6	2,4	1	1.000
24S6000301500	M3	0,5	15	6	2,4	1	1.000
24S6000301600	M3	0,5	16	6	2,4	1	1.000
24S6000301800	M3	0,5	18	6	2,4	1	1.000
24S6000302000	M3	0,5	20	6	2,4	1	1.000
24S6000302200	M3	0,5	22	6	2,4	1	1.000
24S6000302500	M3	0,5	25	6	2,4	1	1.000
24S6000302800	M3	0,5	28	6	2,4	1	1.000
24S6000303000	M3	0,5	30	6	2,4	1	1.000
24S6000303300	M3	0,5	33	6	2,4	1	1.000
24S6000303500	M3	0,5	35	6	2,4	1	1.000
24S6000304000	M3	0,5	40	6	2,4	1	1.000

STANDARD
Similar to DIN 7985

MATERIAL
Nylon

COLOUR
(NA) Natural

NOTES
Available in other colours.

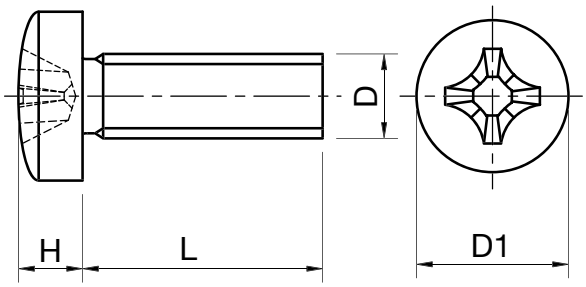

Code (NA)	D	Pitch	L	D1 (max)	H (max)	Imprint PH	Package (pcs)
24S6000304500	M3	0,5	45	6	2,4	1	1.000
24S6000400400	M4	0,7	4	8	3,1	2	1.000
24S6000400500	M4	0,7	5	8	3,1	2	1.000
24S6000400600	M4	0,7	6	8	3,1	2	1.000
24S6000400800	M4	0,7	8	8	3,1	2	1.000
24S6000401000	M4	0,7	10	8	3,1	2	1.000
24S6000401200	M4	0,7	12	8	3,1	2	1.000
24S6000401300	M4	0,7	13	8	3,1	2	1.000
24S6000401400	M4	0,7	14	8	3,1	2	1.000
24S6000401500	M4	0,7	15	8	3,1	2	1.000
24S6000401600	M4	0,7	16	8	3,1	2	1.000
24S6000401800	M4	0,7	18	8	3,1	2	1.000
24S6000402000	M4	0,7	20	8	3,1	2	1.000
24S6000402300	M4	0,7	23	8	3,1	2	1.000
24S6000402500	M4	0,7	25	8	3,1	2	1.000
24S6000402800	M4	0,7	28	8	3,1	2	1.000
24S6000403000	M4	0,7	30	8	3,1	2	1.000
24S6000403500	M4	0,7	35	8	3,1	2	1.000
24S6000404000	M4	0,7	40	8	3,1	2	1.000
24S6000404500	M4	0,7	45	8	3,1	2	1.000
24S6000405000	M4	0,7	50	8	3,1	2	1.000
24S6000405500	M4	0,7	55	8	3,1	2	1.000
24S6000406000	M4	0,7	60	8	3,1	2	1.000
24S6000407000	M4	0,7	70	8	3,1	2	1.000
24S6000500400	M5	0,8	4	10	3,8	2	1.000
24S6000500600	M5	0,8	6	10	3,8	2	1.000
24S6000500700	M5	0,8	7	10	3,8	2	1.000
24S6000500800	M5	0,8	8	10	3,8	2	1.000
24S6000500900	M5	0,8	9	10	3,8	2	1.000
24S6000501000	M5	0,8	10	10	3,8	2	1.000
24S6000501200	M5	0,8	12	10	3,8	2	1.000
24S6000501300	M5	0,8	13	10	3,8	2	1.000
24S6000501400	M5	0,8	14	10	3,8	2	1.000
24S6000501500	M5	0,8	15	10	3,8	2	1.000
24S6000501600	M5	0,8	16	10	3,8	2	1.000
24S6000501700	M5	0,8	17	10	3,8	2	1.000

STANDARD
Similar to DIN 7985

MATERIAL
Nylon

COLOUR
(NA) Natural

NOTES
Available in other colours.

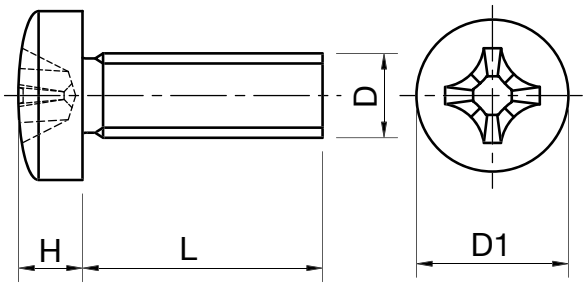

Code (NA)	D	Pitch	L	D1 (max)	H (max)	Imprint PH	Package (pcs)
24S6000502000	M5	0,8	20	10	3,8	2	1.000
24S6000502500	M5	0,8	25	10	3,8	2	1.000
24S6000503000	M5	0,8	30	10	3,8	2	1.000
24S6000503500	M5	0,8	35	10	3,8	2	1.000
24S6000504000	M5	0,8	40	10	3,8	2	1.000
24S6000504500	M5	0,8	45	10	3,8	2	1.000
24S6000505000	M5	0,8	50	10	3,8	2	1.000
24S6000505500	M5	0,8	55	10	3,8	2	1.000
24S6000506000	M5	0,8	60	10	3,8	2	1.000
24S6000506500	M5	0,8	65	10	3,8	2	1.000
24S6000507000	M5	0,8	70	10	3,8	2	1.000
24S6000508000	M5	0,8	80	10	3,8	2	1.000
24S6000600500	M6	1	5	12	4,6	3	1.000
24S6000600600	M6	1	6	12	4,6	3	1.000
24S6000600700	M6	1	7	12	4,6	3	1.000
24S6000600800	M6	1	8	12	4,6	3	1.000
24S6000601000	M6	1	10	12	4,6	3	1.000
24S6000601200	M6	1	12	12	4,6	3	1.000
24S6000601500	M6	1	15	12	4,6	3	1.000
24S6000601600	M6	1	16	12	4,6	3	1.000
24S6000601700	M6	1	17	12	4,6	3	1.000
24S6000602000	M6	1	20	12	4,6	3	1.000
24S6000602500	M6	1	25	12	4,6	3	1.000
24S6000603000	M6	1	30	12	4,6	3	1.000
24S6000603500	M6	1	35	12	4,6	3	1.000
24S6000604000	M6	1	40	12	4,6	3	1.000
24S6000604500	M6	1	45	12	4,6	3	1.000
24S6000605000	M6	1	50	12	4,6	3	1.000
24S6000605500	M6	1	55	12	4,6	3	1.000
24S6000606000	M6	1	60	12	4,6	3	1.000
24S6000606500	M6	1	65	12	4,6	3	1.000
24S6000607000	M6	1	70	12	4,6	3	1.000
24S6000607500	M6	1	75	12	4,6	3	1.000
24S6000608000	M6	1	80	12	4,6	3	1.000
24S6000609000	M6	1	90	12	4,6	3	1.000
24S6000610000	M6	1	100	12	4,6	3	1.000

STANDARD
Similar to DIN 7985

MATERIAL
Nylon

COLOUR
(NA) Natural

NOTES
Available in other colours.

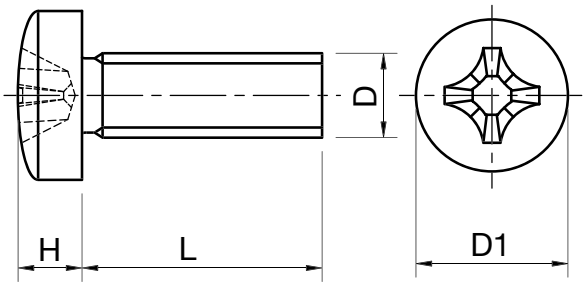

Code (NA)	D	Pitch	L	D1 (max)	H (max)	Imprint PH	Package (pcs)
24S6000800400	M8	1,25	4	16	6	4	1.000
24S6000800500	M8	1,25	5	16	6	4	1.000
24S6000800600	M8	1,25	6	16	6	4	1.000
24S6000800700	M8	1,25	7	16	6	4	1.000
24S6000800800	M8	1,25	8	16	6	4	1.000
24S6000800900	M8	1,25	9	16	6	4	1.000
24S6000801000	M8	1,25	10	16	6	4	1.000
24S6000801100	M8	1,25	11	16	6	4	1.000
24S6000801200	M8	1,25	12	16	6	4	1.000
24S6000801300	M8	1,25	13	16	6	4	1.000
24S6000801500	M8	1,25	15	16	6	4	1.000
24S6000801600	M8	1,25	16	16	6	4	1.000
24S6000801700	M8	1,25	17	16	6	4	1.000
24S6000801800	M8	1,25	18	16	6	4	1.000
24S6000802000	M8	1,25	20	16	6	4	1.000
24S6000802300	M8	1,25	23	16	6	4	1.000
24S6000802500	M8	1,25	25	16	6	4	1.000
24S6000802600	M8	1,25	26	16	6	4	1.000
24S6000803000	M8	1,25	30	16	6	4	1.000
24S6000803500	M8	1,25	35	16	6	4	1.000
24S6000804000	M8	1,25	40	16	6	4	1.000
24S6000804500	M8	1,25	45	16	6	4	1.000
24S6000805000	M8	1,25	50	16	6	4	1.000
24S6000805500	M8	1,25	55	16	6	4	1.000
24S6000806000	M8	1,25	60	16	6	4	1.000
24S6000806500	M8	1,25	65	16	6	4	1.000
24S6000807000	M8	1,25	70	16	6	4	1.000
24S6000807500	M8	1,25	75	16	6	4	1.000
24S6000808000	M8	1,25	80	16	6	4	1.000
24S6000809000	M8	1,25	90	16	6	4	1.000
24S6000810000	M8	1,25	100	16	6	4	1.000
24S6000811000	M8	1,25	110	16	6	4	1.000

STANDARD
Similar to DIN 965

MATERIAL
Nylon

COLOUR
(NA) Natural

NOTES
Available in other colours.

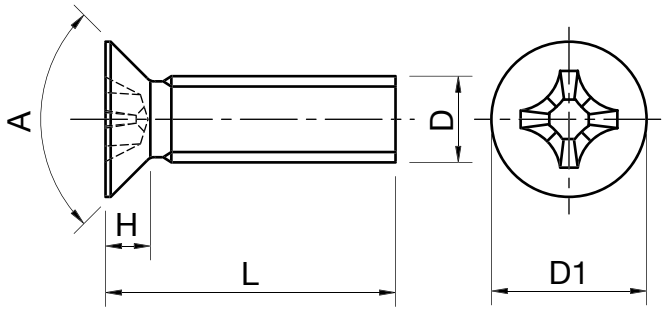

Code (NA)	D	Pitch	L	D1 (max)	H (max)	Imprint PH	A	Package (pcs)
25S6020500400	M2,5	0,45	4	4,7	1,4	1	90°	1.000
25S6020500500	M2,5	0,45	5	4,7	1,4	1	90°	1.000
25S6020500600	M2,5	0,45	6	4,7	1,4	1	90°	1.000
25S6020500800	M2,5	0,45	8	4,7	1,4	1	90°	1.000
25S6020501000	M2,5	0,45	10	4,7	1,4	1	90°	1.000
25S6020501200	M2,5	0,45	12	4,7	1,4	1	90°	1.000
25S6020501600	M2,5	0,45	16	4,7	1,4	1	90°	1.000
25S6020502000	M2,5	0,45	20	4,7	1,4	1	90°	1.000
25S6020502500	M2,5	0,45	25	4,7	1,4	1	90°	1.000
25S6000300500	M3	0,5	5	5,6	1,65	1	90°	1.000
25S6000300600	M3	0,5	6	5,6	1,65	1	90°	1.000
25S6000300800	M3	0,5	8	5,6	1,65	1	90°	1.000
25S6000301000	M3	0,5	10	5,6	1,65	1	90°	1.000
25S6000301200	M3	0,5	12	5,6	1,65	1	90°	1.000
25S6000301400	M3	0,5	14	5,6	1,65	1	90°	1.000
25S6000301600	M3	0,5	16	5,6	1,65	1	90°	1.000
25S6000301700	M3	0,5	17	5,6	1,65	1	90°	1.000
25S6000301800	M3	0,5	18	5,6	1,65	1	90°	1.000
25S6000301900	M3	0,5	19	5,6	1,65	1	90°	1.000
25S6000302000	M3	0,5	20	5,6	1,65	1	90°	1.000
25S6000302200	M3	0,5	22	5,6	1,65	1	90°	1.000
25S6000302400	M3	0,5	24	5,6	1,65	1	90°	1.000
25S6000302500	M3	0,5	25	5,6	1,65	1	90°	1.000
25S6000302700	M3	0,5	27	5,6	1,65	1	90°	1.000
25S6000302900	M3	0,5	29	5,6	1,65	1	90°	1.000
25S6000303000	M3	0,5	30	5,6	1,65	1	90°	1.000
25S6000303200	M3	0,5	32	5,6	1,65	1	90°	1.000
25S6000303400	M3	0,5	34	5,6	1,65	1	90°	1.000
25S6000303500	M3	0,5	35	5,6	1,65	1	90°	1.000
25S6000303700	M3	0,5	37	5,6	1,65	1	90°	1.000
25S6000304200	M3	0,5	42	5,6	1,65	1	90°	1.000
25S6000304400	M3	0,5	44	5,6	1,65	1	90°	1.000
25S6000400400	M4	0,7	4	7,5	2,5	2	90°	1.000
25S6000400600	M4	0,7	6	7,5	2,5	2	90°	1.000
25S6000400700	M4	0,7	7	7,5	2,5	2	90°	1.000
25S6000400800	M4	0,7	8	7,5	2,5	2	90°	1.000
25S6000401000	M4	0,7	10	7,5	2,5	2	90°	1.000
25S6000401200	M4	0,7	12	7,5	2,5	2	90°	1.000

STANDARD
Similar to DIN 965

MATERIAL
Nylon

COLOUR
(NA) Natural

NOTES
Available in other colours.

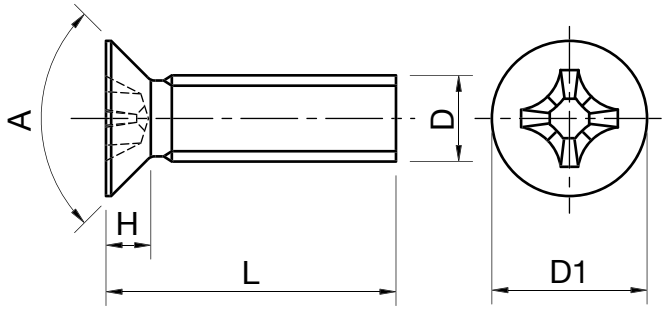

Code (NA)	D	Pitch	L	D1 (max)	H (max)	Imprint PH	A	Package (pcs)
25S6000401400	M4	0,7	14	7,5	2,5	2	90°	1.000
25S6000401500	M4	0,7	15	7,5	2,5	2	90°	1.000
25S6000401600	M4	0,7	16	7,5	2,5	2	90°	1.000
25S6000401700	M4	0,7	17	7,5	2,5	2	90°	1.000
25S6000401800	M4	0,7	18	7,5	2,5	2	90°	1.000
25S6000402000	M4	0,7	20	7,5	2,5	2	90°	1.000
25S6000402200	M4	0,7	22	7,5	2,5	2	90°	1.000
25S6000402500	M4	0,7	25	7,5	2,5	2	90°	1.000
25S6000402700	M4	0,7	27	7,5	2,5	2	90°	1.000
25S6000403000	M4	0,7	30	7,5	2,5	2	90°	1.000
25S6000403200	M4	0,7	32	7,5	2,5	2	90°	1.000
25S6000403500	M4	0,7	35	7,5	2,5	2	90°	1.000
25S6000404000	M4	0,7	40	7,5	2,5	2	90°	1.000
25S6000404200	M4	0,7	42	7,5	2,5	2	90°	1.000
25S6000407200	M4	0,7	72	7,5	2,5	2	90°	1.000
25S6000500700	M5	0,8	7	9,2	2,6	2	90°	1.000
25S6000500800	M5	0,8	8	9,2	2,6	2	90°	1.000
25S6000500900	M5	0,8	9	9,2	2,6	2	90°	1.000
25S6000501000	M5	0,8	10	9,2	2,6	2	90°	1.000
25S6000501100	M5	0,8	11	9,2	2,6	2	90°	1.000
25S6000501200	M5	0,8	12	9,2	2,6	2	90°	1.000
25S6000501300	M5	0,8	13	9,2	2,6	2	90°	1.000
25S6000501400	M5	0,8	14	9,2	2,6	2	90°	1.000
25S6000501500	M5	0,8	15	9,2	2,6	2	90°	1.000
25S6000501600	M5	0,8	16	9,2	2,6	2	90°	1.000
25S6000501700	M5	0,8	17	9,2	2,6	2	90°	1.000
25S6000501800	M5	0,8	18	9,2	2,6	2	90°	1.000
25S6000501900	M5	0,8	19	9,2	2,6	2	90°	1.000
25S6000502000	M5	0,8	20	9,2	2,6	2	90°	1.000
25S6000502100	M5	0,8	21	9,2	2,6	2	90°	1.000
25S6000502200	M5	0,8	22	9,2	2,6	2	90°	1.000
25S6000502300	M5	0,8	23	9,2	2,6	2	90°	1.000
25S6000502500	M5	0,8	25	9,2	2,6	2	90°	1.000
25S6000503000	M5	0,8	30	9,2	2,6	2	90°	1.000
25S6000503300	M5	0,8	33	9,2	2,6	2	90°	1.000
25S6000503500	M5	0,8	35	9,2	2,6	2	90°	1.000
25S6000503800	M5	0,8	38	9,2	2,6	2	90°	1.000
25S6000504000	M5	0,8	40	9,2	2,6	2	90°	1.000

STANDARD
Similar to DIN 965

MATERIAL
Nylon

COLOUR
(NA) Natural

NOTES
Available in other colours.

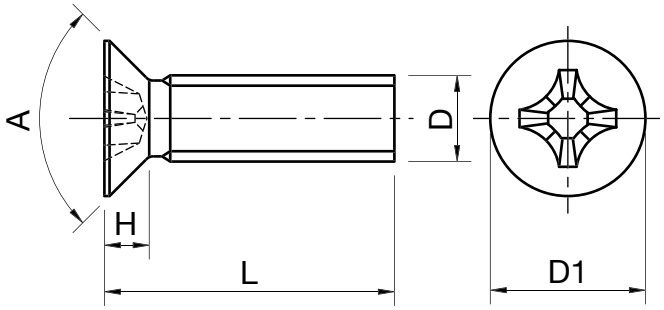

Code (NA)	D	Pitch	L	D1 (max)	H (max)	Imprint PH	A	Package (pcs)
25S6000504300	M5	0,8	43	9,2	2,6	2	90°	1.000
25S6000504500	M5	0,8	45	9,2	2,6	2	90°	1.000
25S6000504800	M5	0,8	48	9,2	2,6	2	90°	1.000
25S6000505000	M5	0,8	50	9,2	2,6	2	90°	1.000
25S6000505300	M5	0,8	53	9,2	2,6	2	90°	1.000
25S6000505500	M5	0,8	55	9,2	2,6	2	90°	1.000
25S6000506300	M5	0,8	63	9,2	2,6	2	90°	1.000
25S6000508300	M5	0,8	83	9,2	2,6	2	90°	1.000
25S6000600800	M6	1	8	11	3	3	90°	1.000
25S6000601000	M6	1	10	11	3	3	90°	1.000
25S6000601100	M6	1	11	11	3	3	90°	1.000
25S6000601200	M6	1	12	11	3	3	90°	1.000
25S6000601300	M6	1	13	11	3	3	90°	1.000
25S6000601500	M6	1	15	11	3	3	90°	1.000
25S6000601700	M6	1	17	11	3	3	90°	1.000
25S6000601900	M6	1	19	11	3	3	90°	1.000
25S6000602000	M6	1	20	11	3	3	90°	1.000
25S6000602100	M6	1	21	11	3	3	90°	1.000
25S6000602200	M6	1	22	11	3	3	90°	1.000
25S6000602500	M6	1	25	11	3	3	90°	1.000
25S6000603000	M6	1	30	11	3	3	90°	1.000
25S6000603500	M6	1	35	11	3	3	90°	1.000
25S6000604000	M6	1	40	11	3	3	90°	1.000
25S6000604500	M6	1	45	11	3	3	90°	1.000
25S6000605000	M6	1	50	11	3	3	90°	1.000
25S6000605500	M6	1	55	11	3	3	90°	1.000
25S6000606000	M6	1	60	11	3	3	90°	1.000
25S6000606500	M6	1	65	11	3	3	90°	1.000
25S6000607500	M6	1	75	11	3	3	90°	1.000
25S6000608000	M6	1	80	11	3	3	90°	1.000
25S6000608500	M6	1	85	11	3	3	90°	1.000
25S6000801000	M8	1,25	10	14,5	4,5	4	90°	1.000
25S6000801200	M8	1,25	12	14,5	4,5	4	90°	1.000
25S6000801300	M8	1,25	13	14,5	4,5	4	90°	1.000
25S6000801400	M8	1,25	14	14,5	4,5	4	90°	1.000
25S6000801500	M8	1,25	15	14,5	4,5	4	90°	1.000
25S6000801600	M8	1,25	16	14,5	4,5	4	90°	1.000
25S6000801700	M8	1,25	17	14,5	4,5	4	90°	1.000

STANDARD
Similar to DIN 965

MATERIAL
Nylon

COLOUR
(NA) Natural

NOTES
Available in other colours.

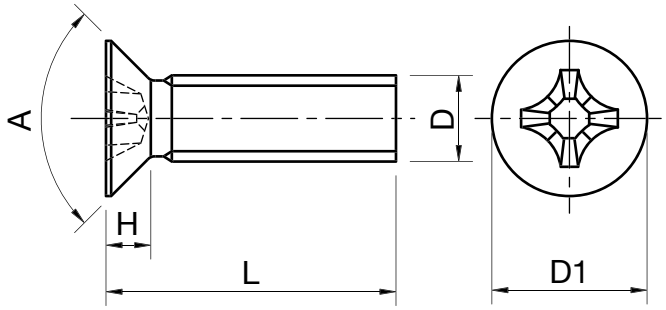

Code (NA)	D	Pitch	L	D1 (max)	H (max)	Imprint PH	A	Package (pcs)
25S6000801800	M8	1,25	18	14,5	4,5	4	90°	1.000
25S6000802000	M8	1,25	20	14,5	4,5	4	90°	1.000
25S6000802100	M8	1,25	21	14,5	4,5	4	90°	1.000
25S6000802200	M8	1,25	22	14,5	4,5	4	90°	1.000
25S6000802500	M8	1,25	25	14,5	4,5	4	90°	1.000
25S6000802800	M8	1,25	28	14,5	4,5	4	90°	1.000
25S6000803000	M8	1,25	30	14,5	4,5	4	90°	1.000
25S6000803500	M8	1,25	35	14,5	4,5	4	90°	1.000
25S6000804000	M8	1,25	40	14,5	4,5	4	90°	1.000
25S6000804500	M8	1,25	45	14,5	4,5	4	90°	1.000
25S6000805000	M8	1,25	50	14,5	4,5	4	90°	1.000
25S6000805500	M8	1,25	55	14,5	4,5	4	90°	1.000
25S6000806000	M8	1,25	60	14,5	4,5	4	90°	1.000
25S6000806500	M8	1,25	65	14,5	4,5	4	90°	1.000
25S6000807000	M8	1,25	70	14,5	4,5	4	90°	1.000
25S6000807500	M8	1,25	75	14,5	4,5	4	90°	1.000
25S6000808000	M8	1,25	80	14,5	4,5	4	90°	1.000

STANDARD
Similar to DIN 966

MATERIAL
Nylon

COLOUR
(NA) Natural

NOTES
Available in other colours.

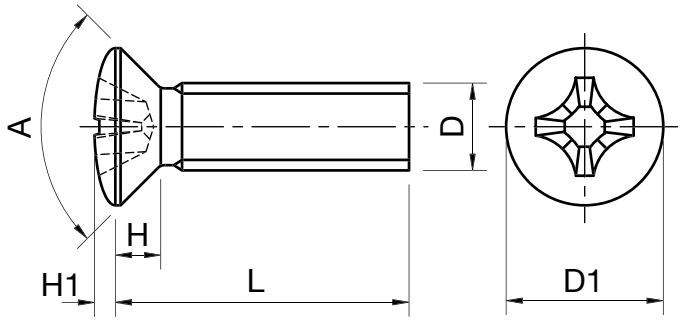

Code (NA)	D	Pitch	L	D1 (max)	H (max)	H1	Imprint PH	A	Package (pcs)
26S6000400400	M4	0,7	4	7,5	-	-	2	90°	1.000
26S6000400600	M4	0,7	6	7,5	-	-	2	90°	1.000
26S6000400700	M4	0,7	7	7,5	-	-	2	90°	1.000
26S6000400800	M4	0,7	8	7,5	-	-	2	90°	1.000
26S6000401000	M4	0,7	10	7,5	-	-	2	90°	1.000
26S6000401200	M4	0,7	12	7,5	-	-	2	90°	1.000
26S6000401400	M4	0,7	14	7,5	-	-	2	90°	1.000
26S6000401500	M4	0,7	15	7,5	-	-	2	90°	1.000
26S6000401600	M4	0,7	16	7,5	-	-	2	90°	1.000
26S6000401700	M4	0,7	17	7,5	-	-	2	90°	1.000
26S6000401800	M4	0,7	18	7,5	-	-	2	90°	1.000
26S6000402000	M4	0,7	20	7,5	-	-	2	90°	1.000
26S6000402200	M4	0,7	22	7,5	-	-	2	90°	1.000
26S6000402500	M4	0,7	25	7,5	-	-	2	90°	1.000
26S6000402700	M4	0,7	27	7,5	-	-	2	90°	1.000
26S6000403000	M4	0,7	30	7,5	-	-	2	90°	1.000
26S6000403200	M4	0,7	32	7,5	-	-	2	90°	1.000
26S6000403500	M4	0,7	35	7,5	-	-	2	90°	1.000
26S6000404000	M4	0,7	40	7,5	-	-	2	90°	1.000
26S6000404200	M4	0,7	42	7,5	-	-	2	90°	1.000
26S6000500700	M5	0,8	7	9,2	-	-	2	90°	1.000
26S6000500800	M5	0,8	8	9,2	-	-	2	90°	1.000
26S6000500900	M5	0,8	9	9,2	-	-	2	90°	1.000
26S6000501000	M5	0,8	10	9,2	-	-	2	90°	1.000
26S6000501100	M5	0,8	11	9,2	-	-	2	90°	1.000
26S6000501200	M5	0,8	12	9,2	-	-	2	90°	1.000
26S6000501300	M5	0,8	13	9,2	-	-	2	90°	1.000
26S6000501400	M5	0,8	14	9,2	-	-	2	90°	1.000
26S6000501500	M5	0,8	15	9,2	-	-	2	90°	1.000
26S6000501600	M5	0,8	16	9,2	-	-	2	90°	1.000
26S6000501700	M5	0,8	17	9,2	-	-	2	90°	1.000
26S6000501800	M5	0,8	18	9,2	-	-	2	90°	1.000
26S6000501900	M5	0,8	19	9,2	-	-	2	90°	1.000
26S6000502000	M5	0,8	20	9,2	-	-	2	90°	1.000
26S6000502100	M5	0,8	21	9,2	-	-	2	90°	1.000
26S6000502200	M5	0,8	22	9,2	-	-	2	90°	1.000
26S6000502300	M5	0,8	23	9,2	-	-	2	90°	1.000
26S6000503000	M5	0,8	30	9,2	-	-	2	90°	1.000

STANDARD
Similar to DIN 966

MATERIAL
Nylon

COLOUR
(NA) Natural

NOTES
Available in other colours.

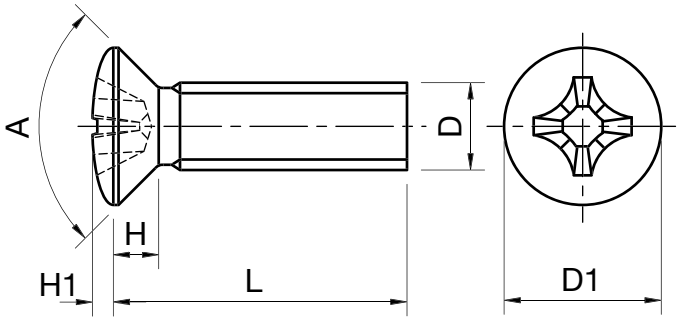

Code (NA)	D	Pitch	L	D1 (max)	H (max)	H1	Imprint PH	A	Package (pcs)
26S6000503300	M5	0,8	33	9,2	-	-	2	90°	1.000
26S6000503500	M5	0,8	35	9,2	-	-	2	90°	1.000
26S6000503800	M5	0,8	38	9,2	-	-	2	90°	1.000
26S6000504000	M5	0,8	40	9,2	-	-	2	90°	1.000
26S6000504300	M5	0,8	43	9,2	-	-	2	90°	1.000
26S6000504500	M5	0,8	45	9,2	-	-	2	90°	1.000
26S6000504800	M5	0,8	48	9,2	-	-	2	90°	1.000
26S6000505000	M5	0,8	50	9,2	-	-	2	90°	1.000
26S6000505300	M5	0,8	53	9,2	-	-	2	90°	1.000
26S6000505500	M5	0,8	55	9,2	-	-	2	90°	1.000
26S6000506300	M5	0,8	63	9,2	-	-	2	90°	1.000
26S6000508300	M5	0,8	83	9,2	-	-	2	90°	1.000
26S6000600800	M6	1	8	11	-	-	3	90°	1.000
26S6000601000	M6	1	10	11	-	-	3	90°	1.000
26S6000601100	M6	1	11	11	-	-	3	90°	1.000
26S6000601200	M6	1	12	11	-	-	3	90°	1.000
26S6000601300	M6	1	13	11	-	-	3	90°	1.000
26S6000601500	M6	1	15	11	-	-	3	90°	1.000
26S6000601700	M6	1	17	11	-	-	3	90°	1.000
26S6000601900	M6	1	19	11	-	-	3	90°	1.000
26S6000602000	M6	1	20	11	-	-	3	90°	1.000
26S6000602100	M6	1	21	11	-	-	3	90°	1.000
26S6000602200	M6	1	22	11	-	-	3	90°	1.000
26S6000602500	M6	1	25	11	-	-	3	90°	1.000
26S6000603000	M6	1	30	11	-	-	3	90°	1.000
26S6000603500	M6	1	35	11	-	-	3	90°	1.000
26S6000604000	M6	1	40	11	-	-	3	90°	1.000
26S6000604500	M6	1	45	11	-	-	3	90°	1.000
26S6000605000	M6	1	50	11	-	-	3	90°	1.000
26S6000605500	M6	1	55	11	-	-	3	90°	1.000
26S6000606000	M6	1	60	11	-	-	3	90°	1.000
26S6000606500	M6	1	65	11	-	-	3	90°	1.000
26S6000607500	M6	1	75	11	-	-	3	90°	1.000
26S6000608000	M6	1	80	11	-	-	3	90°	1.000
26S6000608500	M6	1	85	11	-	-	3	90°	1.000

STANDARD
Similar to DIN 603

MATERIAL
Nylon

COLOUR
(NA) Natural

NOTES
Available in other colours.

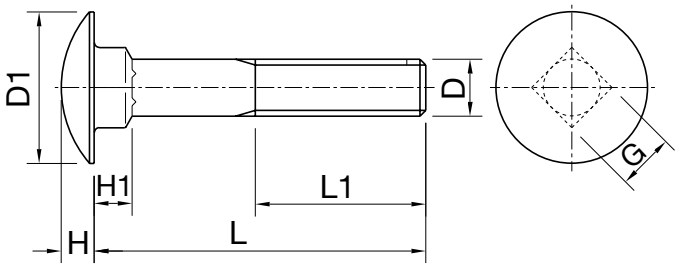

Code (NA)	D	Pitch	L	L1	D1	H (max)	G	H1	Package (pcs)
TTS6100500900	M5	0,8	9	5,5	13	2,8	4,8	3,5	1.000
TTS6100501000	M5	0,8	10	6,5	13	2,8	4,8	3,5	1.000
TTS6100501100	M5	0,8	11	7,5	13	2,8	4,8	3,5	1.000
TTS6100501200	M5	0,8	12	8,5	13	2,8	4,8	3,5	1.000
TTS6100501300	M5	0,8	13	9,5	13	2,8	4,8	3,5	1.000
TTS6100501400	M5	0,8	14	10,5	13	2,8	4,8	3,5	1.000
TTS6100501500	M5	0,8	15	11,5	13	2,8	4,8	3,5	1.000
TTS6100501700	M5	0,8	17	13,5	13	2,8	4,8	3,5	1.000
TTS6100501800	M5	0,8	18	14,5	13	2,8	4,8	3,5	1.000
TTS6100501900	M5	0,8	19	15,5	13	2,8	4,8	3,5	1.000
TTS6100502000	M5	0,8	20	16,5	13	2,8	4,8	3,5	1.000
TTS6100502100	M5	0,8	21	17,5	13	2,8	4,8	3,5	1.000
TTS6100502200	M5	0,8	22	18,5	13	2,8	4,8	3,5	1.000
TTS6100502300	M5	0,8	23	19,5	13	2,8	4,8	3,5	1.000
TTS6100502400	M5	0,8	24	20,5	13	2,8	4,8	3,5	1.000
TTS6100502500	M5	0,8	25	21,5	13	2,8	4,8	3,5	1.000
TTS6100502800	M5	0,8	28	24,5	13	2,8	4,8	3,5	1.000
TTS6100503000	M5	0,8	30	26,5	13	2,8	4,8	3,5	1.000
TTS6100503300	M5	0,8	33	29,5	13	2,8	4,8	3,5	1.000
TTS6100503500	M5	0,8	35	31,5	13	2,8	4,8	3,5	1.000
TTS6100504000	M5	0,8	40	36,5	13	2,8	4,8	3,5	1.000
TTS6100504500	M5	0,8	45	41,5	13	2,8	4,8	3,5	1.000
TTS6100505000	M5	0,8	50	46,5	13	2,8	4,8	3,5	1.000
TTS6100505500	M5	0,8	55	51,5	13	2,8	4,8	3,5	1.000
TTS6100600900	M6	1	9	5	16	3	5,8	4	1.000
TTS6100601000	M6	1	10	6	16	3	5,8	4	1.000
TTS6100601100	M6	1	11	7	16	3	5,8	4	1.000
TTS6100601200	M6	1	12	8	16	3	5,8	4	1.000
TTS6100601400	M6	1	14	10	16	3	5,8	4	1.000
TTS6100601500	M6	1	15	11	16	3	5,8	4	1.000
TTS6100601600	M6	1	16	12	16	3	5,8	4	1.000
TTS6100601800	M6	1	18	14	16	3	5,8	4	1.000
TTS6100601900	M6	1	19	15	16	3	5,8	4	1.000
TTS6100602000	M6	1	20	16	16	3	5,8	4	1.000
TTS6100602100	M6	1	21	17	16	3	5,8	4	1.000
TTS6100602400	M6	1	24	20	16	3	5,8	4	1.000
TTS6100602500	M6	1	25	21	16	3	5,8	4	1.000
TTS6100602900	M6	1	29	25	16	3	5,8	4	1.000
TTS6100603000	M6	1	30	26	16	3	5,8	4	1.000
TTS6100603400	M6	1	34	30	16	3	5,8	4	1.000

STANDARD
Similar to DIN 603

MATERIAL
Nylon

COLOUR
(NA) Natural

NOTES
Available in other colours.

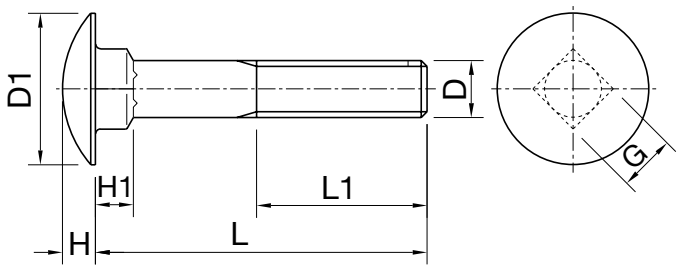

Code (NA)	D	Pitch	L	L1	D1	H (max)	G	H1	Package (pcs)
TTS6100603900	M6	1	39	35	16	3	5,8	4	1.000
TTS6100604400	M6	1	44	40	16	3	5,8	4	1.000
TTS6100604900	M6	1	49	45	16	3	5,8	4	1.000
TTS6100605400	M6	1	54	50	16	3	5,8	4	1.000
TTS6100606000	M6	1	60	56	16	3	5,8	4	1.000
TTS6100606400	M6	1	64	60	16	3	5,8	4	1.000
TTS6100607400	M6	1	74	70	16	3	5,8	4	1.000
TTS6100608400	M6	1	84	80	16	3	5,8	4	1.000
TTS6100801000	M8	1,25	10	5	19	3,8	7,8	5	1.000
TTS6100801100	M8	1,25	11	6	19	3,8	7,8	5	1.000
TTS6100801200	M8	1,25	12	7	19	3,8	7,8	5	1.000
TTS6100801300	M8	1,25	13	8	19	3,8	7,8	5	1.000
TTS6100801400	M8	1,25	14	9	19	3,8	7,8	5	1.000
TTS6100801500	M8	1,25	15	10	19	3,8	7,8	5	1.000
TTS6100801600	M8	1,25	16	11	19	3,8	7,8	5	1.000
TTS6100801700	M8	1,25	17	12	19	3,8	7,8	5	1.000
TTS6100801800	M8	1,25	18	13	19	3,8	7,8	5	1.000
TTS6100801900	M8	1,25	19	14	19	3,8	7,8	5	1.000
TTS6100802000	M8	1,25	20	15	19	3,8	7,8	5	1.000
TTS6100802100	M8	1,25	21	16	19	3,8	7,8	5	1.000
TTS6100802200	M8	1,25	22	17	19	3,8	7,8	5	1.000
TTS6100802300	M8	1,25	23	18	19	3,8	7,8	5	1.000
TTS6100802500	M8	1,25	25	20	19	3,8	7,8	5	1.000
TTS6100802800	M8	1,25	28	23	19	3,8	7,8	5	1.000
TTS6100803000	M8	1,25	30	25	19	3,8	7,8	5	1.000
TTS6100803500	M8	1,25	35	30	19	3,8	7,8	5	1.000
TTS6100804000	M8	1,25	40	35	19	3,8	7,8	5	1.000
TTS6100804500	M8	1,25	45	40	19	3,8	7,8	5	1.000
TTS6100805000	M8	1,25	50	45	19	3,8	7,8	5	1.000
TTS6100805500	M8	1,25	55	50	19	3,8	7,8	5	1.000
TTS6100806000	M8	1,25	60	55	19	3,8	7,8	5	1.000
TTS6100806500	M8	1,25	65	60	19	3,8	7,8	5	1.000
TTS6100807000	M8	1,25	70	65	19	3,8	7,8	5	1.000
TTS6100807500	M8	1,25	75	70	19	3,8	7,8	5	1.000
TTS6100808000	M8	1,25	80	75	19	3,8	7,8	5	1.000
TTS6100808500	M8	1,25	85	80	19	3,8	7,8	5	1.000
TTS6100809000	M8	1,25	90	85	19	3,8	7,8	5	1.000
TTS6100809500	M8	1,25	95	90	19	3,8	7,8	5	1.000
TTS6100810000	M8	1,25	100	95	19	3,8	7,8	5	1.000
TTS6100812000	M8	1,25	120	115	19	3,8	7,8	5	1.000

STANDARD
Similar to DIN 933

MATERIAL
Nylon

COLOUR
(NA) Natural

NOTES
Available in other colours.

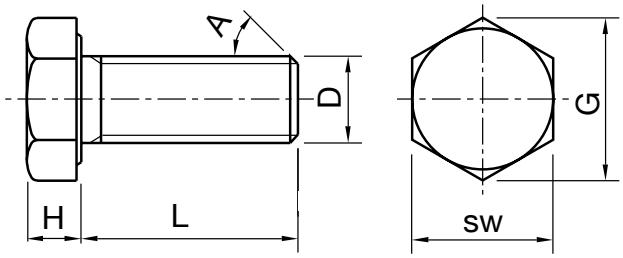

Code (NA)	D	Pitch	L	SW	G (min)	H	A	Package (pcs)
20S6000200400	M2	0,4	4	3	3,32	1,4	15° ÷ 30°	1.000
20S6000200500	M2	0,4	5	3	3,32	1,4	15° ÷ 30°	1.000
20S6000200600	M2	0,4	6	3	3,32	1,4	15° ÷ 30°	1.000
20S6000200800	M2	0,4	8	3	3,32	1,4	15° ÷ 30°	1.000
20S6000201000	M2	0,4	10	3	3,32	1,4	15° ÷ 30°	1.000
20S6000201200	M2	0,4	12	3	3,32	1,4	15° ÷ 30°	1.000
20S6000201600	M2	0,4	16	3	3,32	1,4	15° ÷ 30°	1.000
20S6000202000	M2	0,4	20	3	3,32	1,4	15° ÷ 30°	1.000
20S6000202500	M2	0,4	25	3	3,32	1,4	15° ÷ 30°	1.000
20S6020500400	M2,5	0,45	4	4	4,45	2	15° ÷ 30°	1.000
20S6020500500	M2,5	0,45	5	4	4,45	2	15° ÷ 30°	1.000
20S6020500600	M2,5	0,45	6	4	4,45	2	15° ÷ 30°	1.000
20S6020500800	M2,5	0,45	8	4	4,45	2	15° ÷ 30°	1.000
20S6020501000	M2,5	0,45	10	4	4,45	2	15° ÷ 30°	1.000
20S6020501200	M2,5	0,45	12	4	4,45	2	15° ÷ 30°	1.000
20S6020501600	M2,5	0,45	16	4	4,45	2	15° ÷ 30°	1.000
20S6020502000	M2,5	0,45	20	4	4,45	2	15° ÷ 30°	1.000
20S6020502500	M2,5	0,45	25	4	4,45	2	15° ÷ 30°	1.000
20S6000300400	M3	0,5	4	5,5	6,01	2	15° ÷ 30°	1.000
20S6000300500	M3	0,5	5	5,5	6,01	2	15° ÷ 30°	1.000
20S6000300600	M3	0,5	6	5,5	6,01	2	15° ÷ 30°	1.000
20S6000300800	M3	0,5	8	5,5	6,01	2	15° ÷ 30°	1.000
20S6000301000	M3	0,5	10	5,5	6,01	2	15° ÷ 30°	1.000
20S6000301200	M3	0,5	12	5,5	6,01	2	15° ÷ 30°	1.000
20S6000301500	M3	0,5	15	5,5	6,01	2	15° ÷ 30°	1.000
20S6000301600	M3	0,5	16	5,5	6,01	2	15° ÷ 30°	1.000
20S6000301800	M3	0,5	18	5,5	6,01	2	15° ÷ 30°	1.000
20S6000302000	M3	0,5	20	5,5	6,01	2	15° ÷ 30°	1.000
20S6000302500	M3	0,5	25	5,5	6,01	2	15° ÷ 30°	1.000
20S6000303000	M3	0,5	30	5,5	6,01	2	15° ÷ 30°	1.000
20S6000303300	M3	0,5	33	5,5	6,01	2	15° ÷ 30°	1.000
20S6000400400	M4	0,7	4	7	7,66	2,8	15° ÷ 30°	1.000
20S6000400500	M4	0,7	5	7	7,66	2,8	15° ÷ 30°	1.000
20S6000400600	M4	0,7	6	7	7,66	2,8	15° ÷ 30°	1.000
20S6000400800	M4	0,7	8	7	7,66	2,8	15° ÷ 30°	1.000
20S6000401000	M4	0,7	10	7	7,66	2,8	15° ÷ 30°	1.000
20S6000401200	M4	0,7	12	7	7,66	2,8	15° ÷ 30°	1.000
20S6000401300	M4	0,7	13	7	7,66	2,8	15° ÷ 30°	1.000

STANDARD
Similar to DIN 933

MATERIAL
Nylon

COLOUR
(NA) Natural

NOTES
Available in other colours.

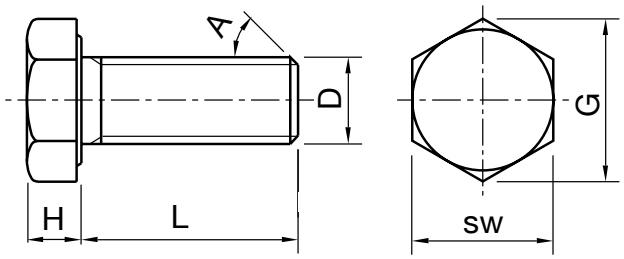

Code (NA)	D	Pitch	L	SW	G (min)	H	A	Package (pcs)
20S6000401400	M4	0,7	14	7	7,66	2,8	15° ÷ 30°	1.000
20S6000401500	M4	0,7	15	7	7,66	2,8	15° ÷ 30°	1.000
20S6000401600	M4	0,7	16	7	7,66	2,8	15° ÷ 30°	1.000
20S6000401800	M4	0,7	18	7	7,66	2,8	15° ÷ 30°	1.000
20S6000402000	M4	0,7	20	7	7,66	2,8	15° ÷ 30°	1.000
20S6000402300	M4	0,7	23	7	7,66	2,8	15° ÷ 30°	1.000
20S6000402500	M4	0,7	25	7	7,66	2,8	15° ÷ 30°	1.000
20S6000402800	M4	0,7	28	7	7,66	2,8	15° ÷ 30°	1.000
20S6000403000	M4	0,7	30	7	7,66	2,8	15° ÷ 30°	1.000
20S6000404000	M4	0,7	40	7	7,66	2,8	15° ÷ 30°	1.000
20S6000500400	M5	0,8	4	8	8,79	3,5	15° ÷ 30°	1.000
20S6000500600	M5	0,8	6	8	8,79	3,5	15° ÷ 30°	1.000
20S6000500700	M5	0,8	7	8	8,79	3,5	15° ÷ 30°	1.000
20S6000500800	M5	0,8	8	8	8,79	3,5	15° ÷ 30°	1.000
20S6000500900	M5	0,8	9	8	8,79	3,5	15° ÷ 30°	1.000
20S6000501000	M5	0,8	10	8	8,79	3,5	15° ÷ 30°	1.000
20S6000501200	M5	0,8	12	8	8,79	3,5	15° ÷ 30°	1.000
20S6000501300	M5	0,8	13	8	8,79	3,5	15° ÷ 30°	1.000
20S6000501400	M5	0,8	14	8	8,79	3,5	15° ÷ 30°	1.000
20S6000501500	M5	0,8	15	8	8,79	3,5	15° ÷ 30°	1.000
20S6000501600	M5	0,8	16	8	8,79	3,5	15° ÷ 30°	1.000
20S6000501700	M5	0,8	17	8	8,79	3,5	15° ÷ 30°	1.000
20S6000502000	M5	0,8	20	8	8,79	3,5	15° ÷ 30°	1.000
20S6000502500	M5	0,8	25	8	8,79	3,5	15° ÷ 30°	1.000
20S6000503000	M5	0,8	30	8	8,79	3,5	15° ÷ 30°	1.000
20S6000503500	M5	0,8	35	8	8,79	3,5	15° ÷ 30°	1.000
20S6000504000	M5	0,8	40	8	8,79	3,5	15° ÷ 30°	1.000
20S6000504500	M5	0,8	45	8	8,79	3,5	15° ÷ 30°	1.000
20S6000505000	M5	0,8	50	8	8,79	3,5	15° ÷ 30°	1.000
20S6000600500	M6	1	5	10	11,05	4	15° ÷ 30°	1.000
20S6000600600	M6	1	6	10	11,05	4	15° ÷ 30°	1.000
20S6000600700	M6	1	7	10	11,05	4	15° ÷ 30°	1.000
20S6000600800	M6	1	8	10	11,05	4	15° ÷ 30°	1.000
20S6000601000	M6	1	10	10	11,05	4	15° ÷ 30°	1.000
20S6000601200	M6	1	12	10	11,05	4	15° ÷ 30°	1.000
20S6000601500	M6	1	15	10	11,05	4	15° ÷ 30°	1.000
20S6000601600	M6	1	16	10	11,05	4	15° ÷ 30°	1.000
20S6000601700	M6	1	17	10	11,05	4	15° ÷ 30°	1.000

STANDARD
Similar to DIN 933

MATERIAL
Nylon

COLOUR
(NA) Natural

NOTES
Available in other colours.

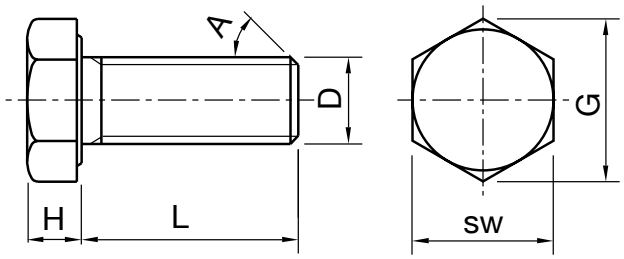

Code (NA)	D	Pitch	L	SW	G (min)	H	A	Package (pcs)
20S6000602000	M6	1	20	10	11,05	4	15° ÷ 30°	1.000
20S6000602500	M6	1	25	10	11,05	4	15° ÷ 30°	1.000
20S6000603000	M6	1	30	10	11,05	4	15° ÷ 30°	1.000
20S6000604000	M6	1	40	10	11,05	4	15° ÷ 30°	1.000
20S6000604500	M6	1	45	10	11,05	4	15° ÷ 30°	1.000
20S6000605000	M6	1	50	10	11,05	4	15° ÷ 30°	1.000
20S6000800400	M8	1,25	4	13	14,38	5,3	15° ÷ 30°	1.000
20S6000800500	M8	1,25	5	13	14,38	5,3	15° ÷ 30°	1.000
20S6000800600	M8	1,25	6	13	14,38	5,3	15° ÷ 30°	1.000
20S6000800700	M8	1,25	7	13	14,38	5,3	15° ÷ 30°	1.000
20S6000800800	M8	1,25	8	13	14,38	5,3	15° ÷ 30°	1.000
20S6000800900	M8	1,25	9	13	14,38	5,3	15° ÷ 30°	1.000
20S6000801000	M8	1,25	10	13	14,38	5,3	15° ÷ 30°	1.000
20S6000801100	M8	1,25	11	13	14,38	5,3	15° ÷ 30°	1.000
20S6000801200	M8	1,25	12	13	14,38	5,3	15° ÷ 30°	1.000
20S6000801300	M8	1,25	13	13	14,38	5,3	15° ÷ 30°	1.000
20S6000801500	M8	1,25	15	13	14,38	5,3	15° ÷ 30°	1.000
20S6000801600	M8	1,25	16	13	14,38	5,3	15° ÷ 30°	1.000
20S6000801700	M8	1,25	17	13	14,38	5,3	15° ÷ 30°	1.000
20S6000801800	M8	1,25	18	13	14,38	5,3	15° ÷ 30°	1.000
20S6000802000	M8	1,25	20	13	14,38	5,3	15° ÷ 30°	1.000
20S6000802300	M8	1,25	23	13	14,38	5,3	15° ÷ 30°	1.000
20S6000802500	M8	1,25	25	13	14,38	5,3	15° ÷ 30°	1.000
20S6000803000	M8	1,25	30	13	14,38	5,3	15° ÷ 30°	1.000
20S6000803500	M8	1,25	35	13	14,38	5,3	15° ÷ 30°	1.000
20S6000804000	M8	1,25	40	13	14,38	5,3	15° ÷ 30°	1.000
20S6000804500	M8	1,25	45	13	14,38	5,3	15° ÷ 30°	1.000
20S6000805000	M8	1,25	50	13	14,38	5,3	15° ÷ 30°	1.000
20S6000806000	M8	1,25	60	13	14,38	5,3	15° ÷ 30°	1.000
20S6000806500	M8	1,25	65	13	14,38	5,3	15° ÷ 30°	1.000
20S6001000400	M10	1,5	4	17	18,9	6,4	15° ÷ 30°	1.000
20S6001000600	M10	1,5	6	17	18,9	6,4	15° ÷ 30°	1.000
20S6001000700	M10	1,5	7	17	18,9	6,4	15° ÷ 30°	1.000
20S6001000800	M10	1,5	8	17	18,9	6,4	15° ÷ 30°	1.000
20S6001001000	M10	1,5	10	17	18,9	6,4	15° ÷ 30°	1.000
20S6001001200	M10	1,5	12	17	18,9	6,4	15° ÷ 30°	1.000
20S6001001500	M10	1,5	15	17	18,9	6,4	15° ÷ 30°	1.000
20S6001001600	M10	1,5	16	17	18,9	6,4	15° ÷ 30°	1.000

STANDARD
Similar to DIN 933

MATERIAL
Nylon

COLOUR
(NA) Natural

NOTES
Available in other colours.

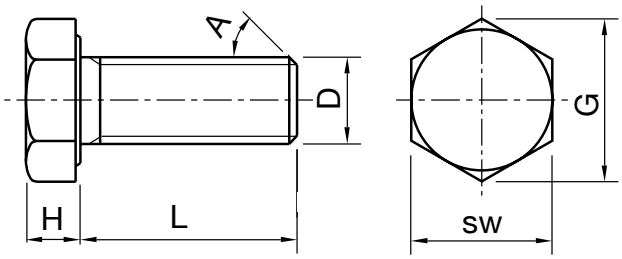

Code (NA)	D	Pitch	L	SW	G (min)	H	A	Package (pcs)
20S6001002000	M10	1,5	20	17	18,9	6,4	15° ÷ 30°	1.000
20S6001002500	M10	1,5	25	17	18,9	6,4	15° ÷ 30°	1.000
20S6001003000	M10	1,5	30	17	18,9	6,4	15° ÷ 30°	1.000
20S6001003500	M10	1,5	35	17	18,9	6,4	15° ÷ 30°	1.000
20S6001004000	M10	1,5	40	17	18,9	6,4	15° ÷ 30°	1.000
20S6001005000	M10	1,5	50	17	18,9	6,4	15° ÷ 30°	1.000
20S6001200900	M12	1,75	9	19	21,1	7,5	15° ÷ 30°	1.000
20S6001201000	M12	1,75	10	19	21,1	7,5	15° ÷ 30°	1.000
20S6001201100	M12	1,75	11	19	21,1	7,5	15° ÷ 30°	1.000
20S6001201200	M12	1,75	12	19	21,1	7,5	15° ÷ 30°	1.000
20S6001201500	M12	1,75	15	19	21,1	7,5	15° ÷ 30°	1.000
20S6001202000	M12	1,75	20	19	21,1	7,5	15° ÷ 30°	1.000
20S6001202500	M12	1,75	25	19	21,1	7,5	15° ÷ 30°	1.000
20S6001203000	M12	1,75	30	19	21,1	7,5	15° ÷ 30°	1.000
20S6001203500	M12	1,75	35	19	21,1	7,5	15° ÷ 30°	1.000
20S6001204000	M12	1,75	40	19	21,1	7,5	15° ÷ 30°	1.000
20S6001204500	M12	1,75	45	19	21,1	7,5	15° ÷ 30°	1.000
20S6001205000	M12	1,75	50	19	21,1	7,5	15° ÷ 30°	1.000
20S6001206000	M12	1,75	60	19	21,1	7,5	15° ÷ 30°	1.000
20S6001602000	M16	2	20	24	26,75	10	15° ÷ 30°	1.000
20S6001603000	M16	2	30	24	26,75	10	15° ÷ 30°	1.000
20S6001604000	M16	2	40	24	26,75	10	15° ÷ 30°	1.000
20S6001606000	M16	2	60	24	26,75	10	15° ÷ 30°	1.000
20S6001606500	M16	2	65	24	26,75	10	15° ÷ 30°	1.000
20S6001607000	M16	2	70	24	26,75	10	15° ÷ 30°	1.000
20S6001610000	M16	2	100	24	26,75	10	15° ÷ 30°	1.000

STANDARD
Similar to DIN 931

MATERIAL
Nylon

COLOUR
(NA) Natural

NOTES
Available in other colours.

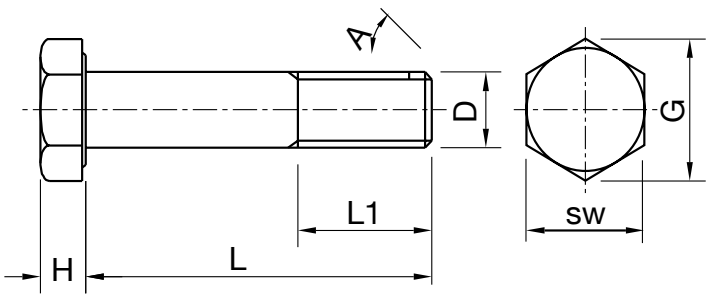

Code (NA)	D	Pitch	L	L1	SW	G (min)	H	A	Package (pcs)
20S6100301400	M3	0,5	14	12	5,5	6,01	2	15° ÷ 30°	1.000
20S6100302200	M3	0,5	22	20	5,5	6,01	2	15° ÷ 30°	1.000
20S6100302800	M3	0,5	28	18	5,5	6,01	2	15° ÷ 30°	1.000
20S6100303400	M3	0,5	34	30	5,5	6,01	2	15° ÷ 30°	1.000
20S6100304000	M3	0,5	40	12	5,5	6,01	2	15° ÷ 30°	1.000
20S6100304500	M3	0,5	45	30	5,5	6,01	2	15° ÷ 30°	1.000
20S6100403500	M4	0,7	35	30	7	7,66	2,8	15° ÷ 30°	1.000
20S6100404500	M4	0,7	45	40	7	7,66	2,8	15° ÷ 30°	1.000
20S6100405000	M4	0,7	50	40	7	7,66	2,8	15° ÷ 30°	1.000
20S6100405500	M4	0,7	55	30	7	7,66	2,8	15° ÷ 30°	1.000
20S6100406000	M4	0,7	60	30	7	7,66	2,8	15° ÷ 30°	1.000
20S6100407000	M4	0,7	70	30	7	7,66	2,8	15° ÷ 30°	1.000
20S6100501800	M5	0,8	18	17	8	8,79	3,5	15° ÷ 30°	1.000
20S6100505500	M5	0,8	55	40	8	8,79	3,5	15° ÷ 30°	1.000
20S6100506000	M5	0,8	60	40	8	8,79	3,5	15° ÷ 30°	1.000
20S6100506500	M5	0,8	65	50	8	8,79	3,5	15° ÷ 30°	1.000
20S6100507000	M5	0,8	70	50	8	8,79	3,5	15° ÷ 30°	1.000
20S6100508000	M5	0,8	80	40	8	8,79	3,5	15° ÷ 30°	1.000
20S6100603500	M6	1	35	30	10	11,05	4	15° ÷ 30°	1.000
20S6100605500	M6	1	55	50	10	11,05	4	15° ÷ 30°	1.000
20S6100606000	M6	1	60	55	10	11,05	4	15° ÷ 30°	1.000
20S6100606500	M6	1	65	55	10	11,05	4	15° ÷ 30°	1.000
20S6100607000	M6	1	70	55	10	11,05	4	15° ÷ 30°	1.000
20S6100607500	M6	1	75	50	10	11,05	4	15° ÷ 30°	1.000
20S6100608000	M6	1	80	50	10	11,05	4	15° ÷ 30°	1.000
20S6100609000	M6	1	90	50	10	11,05	4	15° ÷ 30°	1.000
20S6100610000	M6	1	100	50	10	11,05	4	15° ÷ 30°	1.000
20S6100802600	M8	1,25	26	20	13	14,38	5,3	15° ÷ 30°	1.000
20S6100805500	M8	1,25	55	50	13	14,38	5,3	15° ÷ 30°	1.000
20S6100807000	M8	1,25	70	65	13	14,38	5,3	15° ÷ 30°	1.000
20S6100807500	M8	1,25	75	65	13	14,38	5,3	15° ÷ 30°	1.000
20S6100808000	M8	1,25	80	65	13	14,38	5,3	15° ÷ 30°	1.000
20S6100809000	M8	1,25	90	65	13	14,38	5,3	15° ÷ 30°	1.000
20S6100810000	M8	1,25	100	65	13	14,38	5,3	15° ÷ 30°	1.000
20S6100811000	M8	1,25	110	60	13	14,38	5,3	15° ÷ 30°	1.000
20S6101001300	M10	1,5	13	8	17	18,9	6,4	15° ÷ 30°	1.000
20S6101001400	M10	1,5	14	4	17	18,9	6,4	15° ÷ 30°	1.000
20S6101004500	M10	1,5	45	40	17	18,9	6,4	15° ÷ 30°	1.000

STANDARD
Similar to DIN 931

MATERIAL
Nylon

COLOUR
(NA) Natural

NOTES
Available in other colours.

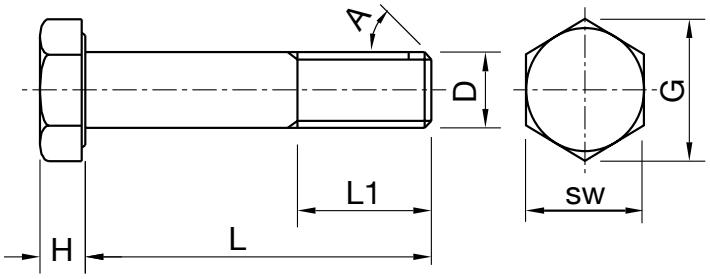

Code (NA)	D	Pitch	L	L1	SW	G (min)	H	A	Package (pcs)
20S6101005500	M10	1,5	55	50	17	18,9	6,4	15° ÷ 30°	1.000
20S6101006000	M10	1,5	60	50	17	18,9	6,4	15° ÷ 30°	1.000
20S6101006500	M10	1,5	65	50	17	18,9	6,4	15° ÷ 30°	1.000
20S6101007000	M10	1,5	70	50	17	18,9	6,4	15° ÷ 30°	1.000
20S6101008000	M10	1,5	80	50	17	18,9	6,4	15° ÷ 30°	1.000
20S6101008500	M10	1,5	85	50	17	18,9	6,4	15° ÷ 30°	1.000
20S6101010000	M10	1,5	100	50	17	18,9	6,4	15° ÷ 30°	1.000
20S6101207000	M12	1,75	70	60	19	21,1	7,5	15° ÷ 30°	1.000
20S6101207500	M12	1,75	75	60	19	21,1	7,5	15° ÷ 30°	1.000
20S6101208000	M12	1,75	80	40	19	21,1	7,5	15° ÷ 30°	1.000
20S6101209000	M12	1,75	90	50	19	21,1	7,5	15° ÷ 30°	1.000
20S6101210000	M12	1,75	100	60	19	21,1	7,5	15° ÷ 30°	1.000
20S6101603500	M16	2	35	30	24	26,75	10	15° ÷ 30°	1.000
20S6101604500	M16	2	45	40	24	26,75	10	15° ÷ 30°	1.000
20S6101605000	M16	2	50	40	24	26,75	10	15° ÷ 30°	1.000
20S6101605500	M16	2	55	40	24	26,75	10	15° ÷ 30°	1.000
20S6101606500	M16	2	65	60	24	26,75	10	15° ÷ 30°	1.000
20S6101607500	M16	2	75	70	24	26,75	10	15° ÷ 30°	1.000
20S6101608000	M16	2	80	70	24	26,75	10	15° ÷ 30°	1.000
20S6101609000	M16	2	90	70	24	26,75	10	15° ÷ 30°	1.000

STANDARD
Similar to DIN 912

MATERIAL
Nylon

COLOUR
(NA) Natural

NOTES
Available in other colours.

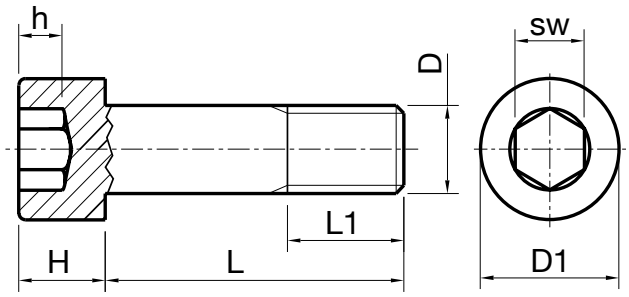

Code (NA)	D	Pitch	L	L1	D1	H	sw	h (min)	Package (pcs)
10S6100300400	M3	0,5	4	4	5,5	3	2,5	2,2	1.000
10S6100300500	M3	0,5	5	5	5,5	3	2,5	2,2	1.000
10S6100300600	M3	0,5	6	6	5,5	3	2,5	2,2	1.000
10S6100300800	M3	0,5	8	8	5,5	3	2,5	2,2	1.000
10S6100301000	M3	0,5	10	10	5,5	3	2,5	2,2	1.000
10S6100301200	M3	0,5	12	12	5,5	3	2,5	2,2	1.000
10S6100301400	M3	0,5	14	14	5,5	3	2,5	2,2	1.000
10S6100301500	M3	0,5	15	15	5,5	3	2,5	2,2	1.000
10S6100301600	M3	0,5	16	16	5,5	3	2,5	2,2	1.000
10S6100301800	M3	0,5	18	18	5,5	3	2,5	2,2	1.000
10S6100302000	M3	0,5	20	20	5,5	3	2,5	2,2	1.000
10S6100302200	M3	0,5	22	22	5,5	3	2,5	2,2	1.000
10S6100302500	M3	0,5	25	25	5,5	3	2,5	2,2	1.000
10S6100302800	M3	0,5	28	28	5,5	3	2,5	2,2	1.000
10S6100303000	M3	0,5	30	30	5,5	3	2,5	2,2	1.000
10S6100303300	M3	0,5	33	33	5,5	3	2,5	2,2	1.000
10S6100303500	M3	0,5	35	35	5,5	3	2,5	2,2	1.000
10S6100304000	M3	0,5	40	40	5,5	3	2,5	2,2	1.000
10S6100304500	M3	0,5	45	45	5,5	3	2,5	2,2	1.000
10S6100400400	M4	0,7	4	4	7	4	3	2,8	1.000
10S6100400500	M4	0,7	5	5	7	4	3	2,8	1.000
10S6100400600	M4	0,7	6	6	7	4	3	2,8	1.000
10S6100400800	M4	0,7	8	8	7	4	3	2,8	1.000
10S6100401000	M4	0,7	10	10	7	4	3	2,8	1.000
10S6100401200	M4	0,7	12	12	7	4	3	2,8	1.000
10S6100401300	M4	0,7	13	13	7	4	3	2,8	1.000
10S6100401400	M4	0,7	14	14	7	4	3	2,8	1.000
10S6100401500	M4	0,7	15	15	7	4	3	2,8	1.000
10S6100401600	M4	0,7	16	16	7	4	3	2,8	1.000
10S6100401800	M4	0,7	18	18	7	4	3	2,8	1.000
10S6100402000	M4	0,7	20	20	7	4	3	2,8	1.000
10S6100402300	M4	0,7	23	23	7	4	3	2,8	1.000
10S6100402500	M4	0,7	25	25	7	4	3	2,8	1.000
10S6100402800	M4	0,7	28	28	7	4	3	2,8	1.000
10S6100403000	M4	0,7	30	30	7	4	3	2,8	1.000
10S6100403500	M4	0,7	35	35	7	4	3	2,8	1.000
10S6100404000	M4	0,7	40	40	7	4	3	2,8	1.000
10S6100404500	M4	0,7	45	45	7	4	3	2,8	1.000
10S6100405000	M4	0,7	50	50	7	4	3	2,8	1.000
10S6100405500	M4	0,7	55	55	7	4	3	2,8	1.000

STANDARD
Similar to DIN 912

MATERIAL
Nylon

COLOUR
(NA) Natural

NOTES
Available in other colours.

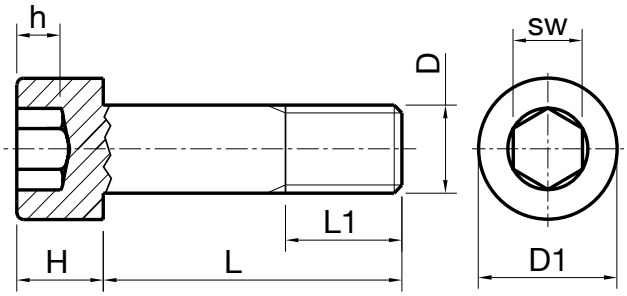

Code (NA)	D	Pitch	L	L1	D1	H	sw	h (min)	Package (pcs)
10S6100406000	M4	0,7	60	60	7	4	3	2,8	1.000
10S6100407000	M4	0,7	70	70	7	4	3	2,8	1.000
10S6100500400	M5	0,8	4	4	8,5	5	4	3,4	1.000
10S6100500600	M5	0,8	6	6	8,5	5	4	3,4	1.000
10S6100500700	M5	0,8	7	7	8,5	5	4	3,4	1.000
10S6100500800	M5	0,8	8	8	8,5	5	4	3,4	1.000
10S6100500900	M5	0,8	9	9	8,5	5	4	3,4	1.000
10S6100501000	M5	0,8	10	10	8,5	5	4	3,4	1.000
10S6100501200	M5	0,8	12	12	8,5	5	4	3,4	1.000
10S6100501300	M5	0,8	13	13	8,5	5	4	3,4	1.000
10S6100501400	M5	0,8	14	14	8,5	5	4	3,4	1.000
10S6100501500	M5	0,8	15	15	8,5	5	4	3,4	1.000
10S6100501600	M5	0,8	16	16	8,5	5	4	3,4	1.000
10S6100501700	M5	0,8	17	17	8,5	5	4	3,4	1.000
10S6100502000	M5	0,8	20	20	8,5	5	4	3,4	1.000
10S6100502500	M5	0,8	25	25	8,5	5	4	3,4	1.000
10S6100503000	M5	0,8	30	30	8,5	5	4	3,4	1.000
10S6100503500	M5	0,8	35	35	8,5	5	4	3,4	1.000
10S6100504000	M5	0,8	40	40	8,5	5	4	3,4	1.000
10S6100504500	M5	0,8	45	45	8,5	5	4	3,4	1.000
10S6100505000	M5	0,8	50	50	8,5	5	4	3,4	1.000
10S6100505500	M5	0,8	55	55	8,5	5	4	3,4	1.000
10S6100506000	M5	0,8	60	60	8,5	5	4	3,4	1.000
10S6100506500	M5	0,8	65	65	8,5	5	4	3,4	1.000
10S6100507000	M5	0,8	70	70	8,5	5	4	3,4	1.000
10S6100508000	M5	0,8	80	80	8,5	5	4	3,4	1.000
10S6100600500	M6	1	5	5	10	6	5	4,7	1.000
10S6100600600	M6	1	6	6	10	6	5	4,7	1.000
10S6100600700	M6	1	7	7	10	6	5	4,7	1.000
10S6100600800	M6	1	8	8	10	6	5	4,7	1.000
10S6100601000	M6	1	10	10	10	6	5	4,7	1.000
10S6100601200	M6	1	12	12	10	6	5	4,7	1.000
10S6100601500	M6	1	15	15	10	6	5	4,7	1.000
10S6100601600	M6	1	16	16	10	6	5	4,7	1.000
10S6100601700	M6	1	17	17	10	6	5	4,7	1.000
10S6100602000	M6	1	20	20	10	6	5	4,7	1.000
10S6100602500	M6	1	25	25	10	6	5	4,7	1.000
10S6100603000	M6	1	30	30	10	6	5	4,7	1.000
10S6100603500	M6	1	35	35	10	6	5	4,7	1.000
10S6100604000	M6	1	40	40	10	6	5	4,7	1.000

STANDARD
Similar to DIN 912

MATERIAL
Nylon

COLOUR
(NA) Natural

NOTES
Available in other colours.

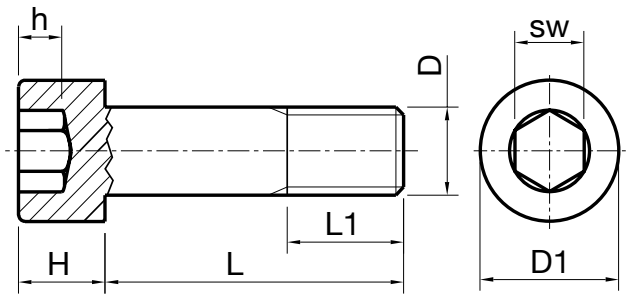

Code (NA)	D	Pitch	L	L1	D1	H	sw	h (min)	Package (pcs)
10S6100604500	M6	1	45	45	10	6	5	4,7	1.000
10S6100605000	M6	1	50	50	10	6	5	4,7	1.000
10S6100605500	M6	1	55	55	10	6	5	4,7	1.000
10S6100606000	M6	1	60	60	10	6	5	4,7	1.000
10S6100606500	M6	1	65	65	10	6	5	4,7	1.000
10S6100607000	M6	1	70	70	10	6	5	4,7	1.000
10S6100607500	M6	1	75	75	10	6	5	4,7	1.000
10S6100608000	M6	1	80	80	10	6	5	4,7	1.000
10S6100609000	M6	1	90	90	10	6	5	4,7	1.000
10S6100800500	M8	1,25	5	5	13	8	6	6	1.000
10S6100800600	M8	1,25	6	6	13	8	6	6	1.000
10S6100800700	M8	1,25	7	7	13	8	6	6	1.000
10S6100800800	M8	1,25	8	8	13	8	6	6	1.000
10S6100800900	M8	1,25	9	9	13	8	6	6	1.000
10S6100801000	M8	1,25	10	10	13	8	6	6	1.000
10S6100801100	M8	1,25	11	11	13	8	6	6	1.000
10S6100801200	M8	1,25	12	12	13	8	6	6	1.000
10S6100801300	M8	1,25	13	13	13	8	6	6	1.000
10S6100801500	M8	1,25	15	15	13	8	6	6	1.000
10S6100801600	M8	1,25	16	16	13	8	6	6	1.000
10S6100801700	M8	1,25	17	17	13	8	6	6	1.000
10S6100801800	M8	1,25	18	18	13	8	6	6	1.000
10S6100802000	M8	1,25	20	20	13	8	6	6	1.000
10S6100802300	M8	1,25	23	23	13	8	6	6	1.000
10S6100802500	M8	1,25	25	25	13	8	6	6	1.000
10S6100802600	M8	1,25	26	26	13	8	6	6	1.000
10S6100803000	M8	1,25	30	30	13	8	6	6	1.000
10S6100803500	M8	1,25	35	35	13	8	6	6	1.000
10S6100804000	M8	1,25	40	40	13	8	6	6	1.000
10S6100804500	M8	1,25	45	45	13	8	6	6	1.000
10S6100805000	M8	1,25	50	50	13	8	6	6	1.000
10S6100805500	M8	1,25	55	55	13	8	6	6	1.000
10S6100806000	M8	1,25	60	60	13	8	6	6	1.000
10S6100806500	M8	1,25	65	65	13	8	6	6	1.000
10S6100807000	M8	1,25	70	70	13	8	6	6	1.000
10S6100807500	M8	1,25	75	75	13	8	6	6	1.000
10S6100808000	M8	1,25	80	80	13	8	6	6	1.000
10S6100809000	M8	1,25	90	90	13	8	6	6	1.000
10S6100810000	M8	1,25	100	100	13	8	6	6	1.000
10S6100811000	M8	1,25	110	110	13	8	6	6	1.000

STANDARD
Similar to DIN 912

MATERIAL
Nylon

COLOUR
(NA) Natural

NOTES
Available in other colours.

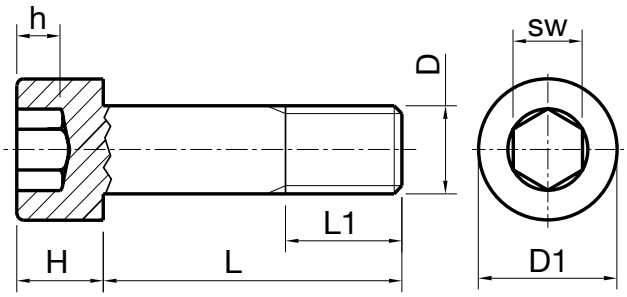

Code (NA)	D	Pitch	L	L1	D1	H	sw	h (min)	Package (pcs)
10S6101000400	M10	1,5	4	4	16	10	8	7	1.000
10S6101000600	M10	1,5	6	6	16	10	8	7	1.000
10S6101000700	M10	1,5	7	7	16	10	8	7	1.000
10S6101000800	M10	1,5	8	8	16	10	8	7	1.000
10S6101001000	M10	1,5	10	10	16	10	8	7	1.000
10S6101001200	M10	1,5	12	12	16	10	8	7	1.000
10S6101001300	M10	1,5	13	13	16	10	8	7	1.000
10S6101001400	M10	1,5	14	14	16	10	8	7	1.000
10S6101001500	M10	1,5	15	15	16	10	8	7	1.000
10S6101001600	M10	1,5	16	16	16	10	8	7	1.000
10S6101002000	M10	1,5	20	20	16	10	8	7	1.000
10S6101002500	M10	1,5	25	25	16	10	8	7	1.000
10S6101003000	M10	1,5	30	30	16	10	8	7	1.000
10S6101003500	M10	1,5	35	35	16	10	8	7	1.000
10S6101004000	M10	1,5	40	40	16	10	8	7	1.000
10S6101004500	M10	1,5	45	45	16	10	8	7	1.000
10S6101005000	M10	1,5	50	50	16	10	8	7	1.000
10S6101005500	M10	1,5	55	55	16	10	8	7	1.000
10S6101006000	M10	1,5	60	60	16	10	8	7	1.000
10S6101006500	M10	1,5	65	65	16	10	8	7	1.000
10S6101007000	M10	1,5	70	70	16	10	8	7	1.000
10S6101008000	M10	1,5	80	80	16	10	8	7	1.000
10S6101009000	M10	1,5	90	90	16	10	8	7	1.000
10S6101200900	M12	1,75	9	9	18	12	10	9,7	1.000
10S6101201000	M12	1,75	10	10	18	12	10	9,7	1.000
10S6101201100	M12	1,75	11	11	18	12	10	9,7	1.000
10S6101201500	M12	1,75	15	15	18	12	10	9,7	1.000
10S6101202000	M12	1,75	20	20	18	12	10	9,7	1.000
10S6101202500	M12	1,75	25	25	18	12	10	9,7	1.000
10S6101203000	M12	1,75	30	30	18	12	10	9,7	1.000
10S6101203500	M12	1,75	35	35	18	12	10	9,7	1.000
10S6101204000	M12	1,75	40	40	18	12	10	9,7	1.000
10S6101204500	M12	1,75	45	45	18	12	10	9,7	1.000
10S6101205000	M12	1,75	50	50	18	12	10	9,7	1.000
10S6101206000	M12	1,75	60	60	18	12	10	9,7	1.000
10S6101207000	M12	1,75	70	70	18	12	10	9,7	1.000
10S6101208000	M12	1,75	80	80	18	12	10	9,7	1.000
10S6101210000	M12	1,75	100	100	18	12	10	9,7	1.000

STANDARD
Similar to DIN 7991

MATERIAL
Nylon

COLOUR
(NA) Natural

NOTES
Available in other colours.

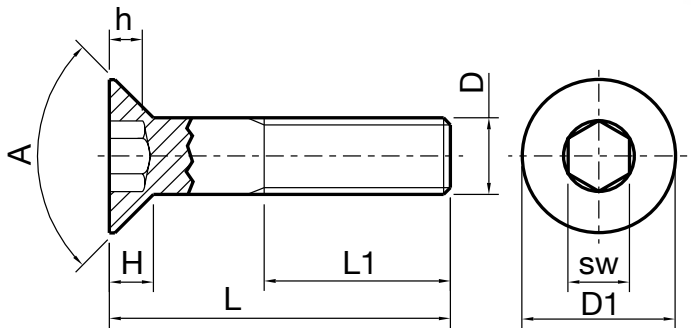

Code (NA)	D	Pitch	L	L1	D1	H (max)	sw	h (min)	A	Package (pcs)
14S6100500700	M5	0,8	7	-	9	-	3	2,8	90°	1.000
14S6100500800	M5	0,8	8	-	9	-	3	2,8	90°	1.000
14S6100500900	M5	0,8	9	-	9	-	3	2,8	90°	1.000
14S6100501000	M5	0,8	10	-	9	-	3	2,8	90°	1.000
14S6100501100	M5	0,8	11	-	9	-	3	2,8	90°	1.000
14S6100501200	M5	0,8	12	-	9	-	3	2,8	90°	1.000
14S6100501300	M5	0,8	13	-	9	-	3	2,8	90°	1.000
14S6100501400	M5	0,8	14	-	9	-	3	2,8	90°	1.000
14S6100501500	M5	0,8	15	-	9	-	3	2,8	90°	1.000
14S6100501600	M5	0,8	16	-	9	-	3	2,8	90°	1.000
14S6100501700	M5	0,8	17	-	9	-	3	2,8	90°	1.000
14S6100501800	M5	0,8	18	-	9	-	3	2,8	90°	1.000
14S6100501900	M5	0,8	19	-	9	-	3	2,8	90°	1.000
14S6100502000	M5	0,8	20	-	9	-	3	2,8	90°	1.000
14S6100502100	M5	0,8	21	-	9	-	3	2,8	90°	1.000
14S6100502200	M5	0,8	22	-	9	-	3	2,8	90°	1.000
14S6100502300	M5	0,8	23	-	9	-	3	2,8	90°	1.000
14S6100502500	M5	0,8	25	-	9	-	3	2,8	90°	1.000
14S6100503000	M5	0,8	30	-	9	-	3	2,8	90°	1.000
14S6100503300	M5	0,8	33	-	9	-	3	2,8	90°	1.000
14S6100503500	M5	0,8	35	-	9	-	3	2,8	90°	1.000
14S6100503800	M5	0,8	38	-	9	-	3	2,8	90°	1.000
14S6100504000	M5	0,8	40	-	9	-	3	2,8	90°	1.000
14S6100504300	M5	0,8	43	-	9	-	3	2,8	90°	1.000
14S6100504500	M5	0,8	45	-	9	-	3	2,8	90°	1.000
14S6100504800	M5	0,8	48	-	9	-	3	2,8	90°	1.000
14S6100505000	M5	0,8	50	-	9	-	3	2,8	90°	1.000
14S6100505300	M5	0,8	53	-	9	-	3	2,8	90°	1.000
14S6100505500	M5	0,8	55	-	9	-	3	2,8	90°	1.000
14S6100506300	M5	0,8	63	-	9	-	3	2,8	90°	1.000
14S6100508300	M5	0,8	83	-	9	-	3	2,8	90°	1.000
14S6100600800	M6	1	8	-	11	-	4	3,3	90°	1.000
14S6100601000	M6	1	10	-	11	-	4	3,3	90°	1.000
14S6100601100	M6	1	11	-	11	-	4	3,3	90°	1.000
14S6100601200	M6	1	12	-	11	-	4	3,3	90°	1.000
14S6100601300	M6	1	13	-	11	-	4	3,3	90°	1.000

STANDARD
Similar to DIN 7991

MATERIAL
Nylon

COLOUR
(NA) Natural

NOTES
Available in other colours.

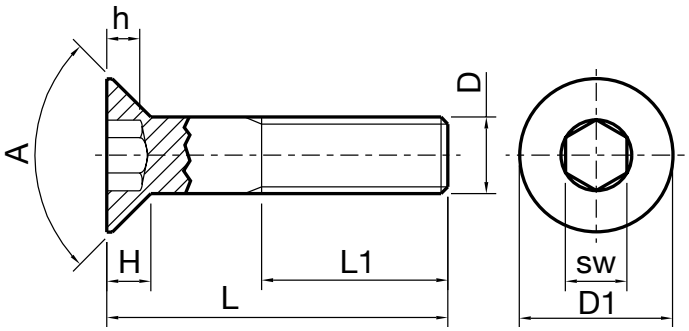

Code (NA)	D	Pitch	L	L1	D1	H (max)	sw	h (min)	A	Package (pcs)
14S6100601500	M6	1	15	-	11	-	4	3,3	90°	1.000
14S6100601700	M6	1	17	-	11	-	4	3,3	90°	1.000
14S6100601900	M6	1	19	-	11	-	4	3,3	90°	1.000
14S6100602000	M6	1	20	-	11	-	4	3,3	90°	1.000
14S6100602100	M6	1	21	-	11	-	4	3,3	90°	1.000
14S6100602200	M6	1	22	-	11	-	4	3,3	90°	1.000
14S6100602500	M6	1	25	-	11	-	4	3,3	90°	1.000
14S6100603000	M6	1	30	-	11	-	4	3,3	90°	1.000
14S6100603500	M6	1	35	-	11	-	4	3,3	90°	1.000
14S6100604000	M6	1	40	-	11	-	4	3,3	90°	1.000
14S6100604500	M6	1	45	-	11	-	4	3,3	90°	1.000
14S6100605000	M6	1	50	-	11	-	4	3,3	90°	1.000
14S6100605500	M6	1	55	-	11	-	4	3,3	90°	1.000
14S6100606000	M6	1	60	-	11	-	4	3,3	90°	1.000
14S6100606500	M6	1	65	-	11	-	4	3,3	90°	1.000
14S6100607500	M6	1	75	-	11	-	4	3,3	90°	1.000
14S6100608000	M6	1	80	-	11	-	4	3,3	90°	1.000
14S6100608500	M6	1	85	-	11	-	4	3,3	90°	1.000

STANDARD
Similar to DIN 976-1

MATERIAL
Nylon

COLOUR
(NA) Natural

NOTES
Available in other colours.

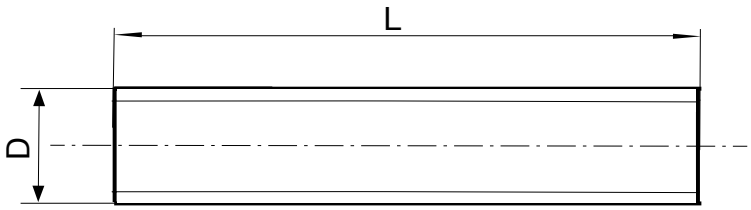

Code (NA)	D	Pitch	L	Package (pcs)
09S6100300000	M3	0,5	1000	10
09S6100400000	M4	0,7	1000	10
09S6100500000	M5	0,8	1000	10
09S6100600000	M6	1	1000	10
09S6100800000	M8	1,25	1000	10
09S6101000000	M10	1,5	1000	10
09S6101200000	M12	1,75	1000	10
09S6101400000	M14	2	1000	10
09S6101600000	M16	2	1000	10
09S6101800000	M18	2,5	1000	10
09S6102000000	M20	2,5	1000	10
09S6102200000	M22	2,5	1000	10
09S6102400000	M24	3	1000	10
09S6103000000	M30	3,5	1000	10
09S6103600000	M36	4	1000	10

STANDARD
Similar to DIN 934

MATERIAL
Nylon

COLOUR
(NA) Natural

NOTES
Available in other colours.

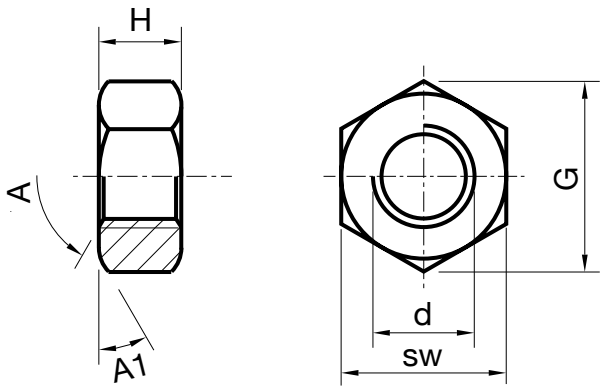

Code (NA)	d	Pitch	SW	G (min)	H	A	A1	Package (pcs)
31S6100200000	M2	0,4	4	4,38	1,6	120°	30°	1.000
31S6120500000	M2,5	0,45	5	5,51	1,8	120°	30°	1.000
31S6100300000	M3	0,5	6	6,58	2,4	120°	30°	1.000
31S6100400000	M4	0,7	7	7,74	3,2	120°	30°	1.000
31S6100500000	M5	0,8	8	8,87	4	120°	30°	1.000
31S6100600000	M6	1	10	11,05	5	120°	30°	1.000
31S6100800000	M8	1,25	13	14,38	6,5	120°	30°	1.000
31S6101000000	M10	1,5	16	17,9	8	120°	30°	1.000
31S6101200000	M12	1,75	18	20,1	10,1	120°	30°	1.000
31S6101400000	M14	2	21	23,49	12,8	120°	30°	500
31S6101600000	M16	2	24	26,75	14,8	120°	30°	500
31S6102000000	M20	2,5	30	33,53	18	120°	30°	500
31S6102400000	M24	3	36	39,98	21,5	120°	30°	100

STANDARD
Similar to DIN 1587

MATERIAL
Nylon

COLOUR
(NA) Natural

NOTES
Available in other colours.

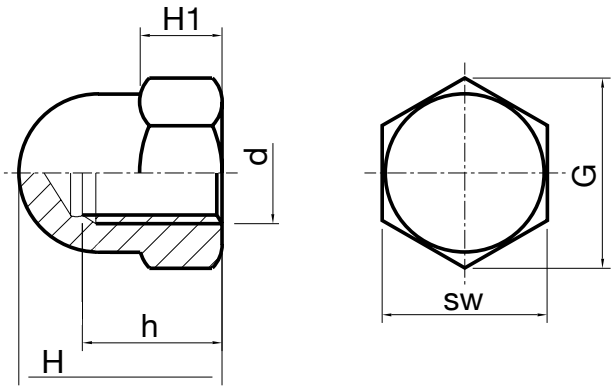

Code (NA)	d	Pitch	SW	G (min)	H	h	H1	Package (pcs)
35S6100300000	M3	0,5	5,5	6,08	6	4	2,4	1.000
35S6100400000	M4	0,7	7	7,74	8	5,5	3,2	1.000
35S6100500000	M5	0,8	8	8,87	10	7	4	1.000
35S6100600000	M6	1	10	11,05	12	7	5	1.000
35S6100800000	M8	1,25	13	14,38	15	11	6,5	1.000
35S6101000000	M10	1,5	17	18,9	18	13	8	1.000
35S6101200000	M12	1,75	19	21,1	22	16	10	1.000
35S6101600000	M16	2	24	26,75	28	21	13	500

STANDARD
Similar to DIN 125

MATERIAL
Nylon

COLOUR
(NA) Natural

NOTES
Available in other colours.

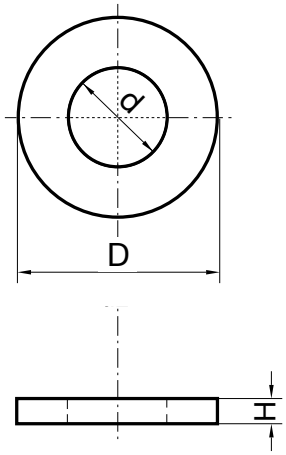

Code (NA)	DN	d	D	H	Package (pcs)
50S0020500000	M2,5	2,7	6	0,5	10.000
50S0000300000	M3	3,2	7	0,5	10.000
50S0000400000	M4	4,3	9	0,8	10.000
50S0000500000	M5	5,3	10	1	10.000
50S0000600000	M6	6,4	12	1,6	10.000
50S0000800000	M8	8,4	16	1,6	5.000
50S0001000000	M10	10,5	20	2	5.000
50S0001200000	M12	13	24	2,5	1.000
50S0001400000	M14	15	28	2,5	1.000
50S0001600000	M16	17	30	3	1.000
50S0001800000	M18	19	34	3	1.000
50S0002000000	M20	21	37	3	500
50S0002200000	M22	23	39	3	500
50S0002400000	M24	25	44	4	500
50S0002700000	M27	28	50	4	500
50S0003000000	M30	31	56	4	100
50S0003300000	M33	34	60	5	100
50S0003600000	M36	37	66	5	100
50S0003900000	M39	40	72	6	100

STANDARD
Similar to DIN 9021

MATERIAL
Nylon

COLOUR
(NA) Natural

NOTES
Available in other colours.

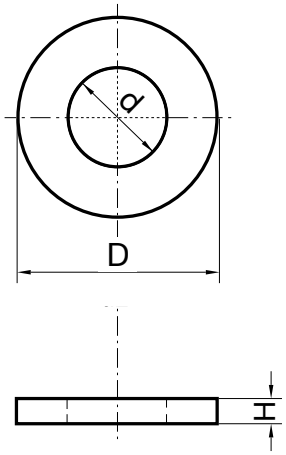

Code (NA)	DN	d	D	s	Package (pcs)
51S0000300900	M3	3,2	9	0,8	10.000
51S0000401200	M4	4,3	12	1	10.000
51S0000501500	M5	5,3	15	1,2	10.000
51S0000601800	M6	6,4	18	1,6	5.000
51S0000802400	M8	8,4	24	2	5.000
51S0001003000	M10	10,5	30	2,5	1.000
51S0001203600	M 12	13	37	3	1.000

8

SNAP-IN FASTENERS

Screw grommets
page 8.1

Strikes and latches
page 8.4

Clips
page 8.8

Rivets
page 8.12

MATERIAL
PA6.6 (Polyamide)

COLOUR
(NA) Natural

SELF-EXTINGUISHING
UL 94 V-2

A TYPE

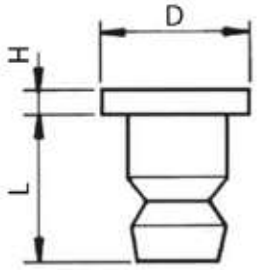

B TYPE

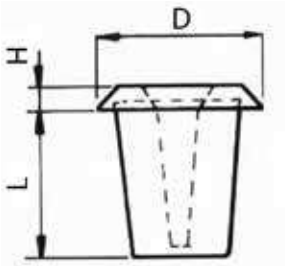

Code (NA)	D	H	L	Panel hole	Panel thickness	Screw size (D)	Type	Package (pcs)
MFM0806808000	10,5	1,3	11,7	6,8 x 6,8	0,8 ÷ 1	3,5 - 3,9 - 4,2	B	5.000
MFM0707005000	11,5	1,3	10,5	7 x 7	0,5 ÷ 2	4,2	A	5.000

MFM04 | ADJUSTABLE SCREW GROMMET
closed base

MATERIAL
PA6.6 (Polyamide)

COLOUR
(NA) Natural
(NE) Black

SELF-EXTINGUISHING
UL 94 V-2

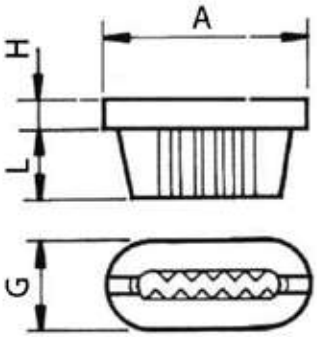

Code (NA)	Code (NE)	A	G	H	L	Panel hole	Panel thickness	Screw size (D)	Package (pcs)
MFM0412008000	-	15,5	9	1,2	8,5	12 x 7	0,8 ÷ 2	4,2	5.000
MFM0415008000	-	18	11	1,5	10,5	15 x 7	0,8	3,5	5.000
-	**MFM04150080N8**	18	10	1,5	8,5	15 x 7	0,8 ÷ 1,2	4,2	2.500

MATERIAL
PA6.6 (Poliammide)

COLOUR
(NA) Natural
(NE) Black
(RO) Red
(AZ) Light Blue

SELF-EXTINGUISHING
UL 94 V-2

OPERATING TEMPERATURE
-35°C ÷ 85°C

TYPE A

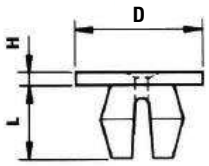

TYPE B

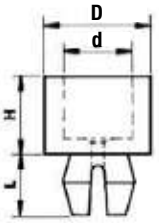

Code (NA)	Code (NE)	Code (RO)	Code (AZ)	D	d	Panel hole	H	L	Panel thicknessu	Screw size (D)	Type	Package (pcs)
MFM0604505000	-	-	-	5,5 x 5,5	-	4,5 x 4,5	1	5,7	0,5 ÷ 1,5	6	A	28.000
MFM0605505000	-	-	-	9 x 9	-	5,5 x 5,5	1,2	5,8	0,5 ÷ 2	4 ÷ 6	A	5.000
MFM0606305000	-	-	-	9,5 x 9,5	-	6,3 x 6,3	1,2	7	0,5 ÷ 3	6	A	6.000
MFM0607005000	-	-	-	10 x 10	-	7 x 7	1	5	0,5 ÷ 1,5	10	A	5.000
MFM0607005A00	-	-	-	9,5 x 9,5	-	7 x 7	1	8	0,5 ÷ 2,5	8	A	10.000
MFM0607005B00	-	-	-	9,5	-	7 x 7	1	8	0,5 ÷ 3	8	A	10.000
MFM0607005C00	-	-	-	13	-	7 x 7	1	8	0,5 ÷ 3,5	8 ÷ 10	A	5.000
-	-	MFM0607005D01	-	9,5 x 9,5	-	7 x 7	1,2	8	0,5 ÷ 4	8	A	12.000
MFM0607007A00	-	-	-	10	-	7 x 7	1	12	0,7 ÷ 0,7	6 ÷ 8	A	5.000
-	-	-	MFM06080070O5	11 x 11	-	8 x 8	1,5	7,5	0,7 ÷ 2	10	A	12.000
-	MFM06100070N8	-	-	12,5 x 12,5	-	10 x 10	1,5	7,5	0,7 ÷ 2	10	A	10.000
MFM0506505000	-	-	-	7	3,7	6,5 x 6,5	3,2	7	0,5 ÷ 3	6 ÷ 8	B	1.000
MFM0507005000	-	-	-	12,5	8,5	7 x 7	4,5	8	0,5 ÷ 4	8 ÷ 10	B	1.000
MFM0507005A00	-	-	-	12,5	8,5	7 x 7	7	8	0,5 ÷ 4	8 ÷ 10	B	1.000
MFM0507005B00	-	-	-	12,5	8,5	7 x 7	10,5	8	0,5 ÷ 4	8 ÷ 10	B	1.000
MFM0507005C00	-	-	-	12,5	8,5	7 x 7	16	8	0,5 ÷ 4	8 ÷ 10	B	1.000
MFM0507005D00	-	-	-	12,5	8,5	7 x 7	20	8	0,5 ÷ 4	8 ÷ 10	B	1.000

HIGH TORQUE SCREW GROMMET
slot in head

MATERIAL
PA6.6 (Polyamide)

COLOUR
(NA) Natural
(NE) Black
(RO) Red
(VE) Green

SELF-EXTINGUISHING
UL 94 V-2

A TYPE

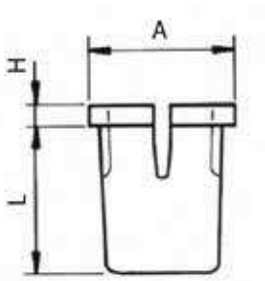

B TYPE

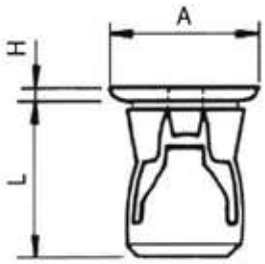

Code (NA)	Code (NE)	Code (VE)	Code (RO)	A	H	L	Panel hole	Panel thickness	Screw size (D)	Type	Pkg. (pcs)
MFM0107006000	-	-	-	9	1	9	7 x 7	0,6 ÷ 1,5	3,5	A	12.000
MFM0107005000	-	-	-	9,5	1	10,5	7 x 7	0,5 ÷ 1,6	4,2	A	5.000
MFM0108007000	-	-	-	11	0,8	11,5	8 x 8	0,7 ÷ 2	4,2 - 4,8	A	2.500
MFM0109505000	-	-	-	12,5	1,2	18	9,5 x 9,5	0,5 ÷ 2	4,2 - 4,8	A	5.000
MFM0207007000	-	-	-	9	1	12,5	7 x 7	0,7 ÷ 1,5	3,5	B	7.000
-	**MFM02080070N8**	-	-	11	1,2	14,8	8 x 8	0,7 ÷ 2	4,2	B	3.500
-	-	**MFM02090070O6**	-	12	1,2	15,8	9 x 9	0,7 ÷ 1,5	4,8	B	2.500
-	-	-	**MFM02100070O1**	14	1,5	18,5	10 x 10	0,7 ÷ 2	4,8	B	5.000

MATERIAL
PA6.6 (Polyamide)

COLOUR
(NE) Black

SELF-EXTINGUISHING
UL 94 V-2

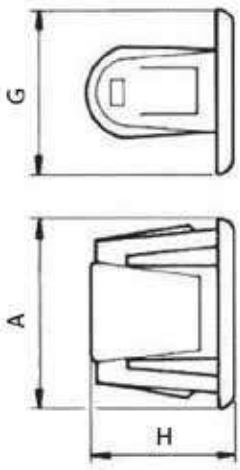

Code (NE)	A	G	H	Panel hole	Panel thickness	Clip	Package (pcs)
MFH05165100N8	20	18	16	16,5 x 11,5	1 ÷ 1,5	Yes	1.000
MFH05167080N8	23	18	16	16,7 x 11,5	0,8 ÷ 1	Yes	1.000
MFH0516708AN8	23	18		16,7 x 11,5	0,8 ÷ 1	No	1.000
MFH05180300N8	25	18	16,5	18 x 13,5	3 ÷ 3,5	Yes	1.000

STRIKE AND LATCH
male - female type 1

MATERIAL
PA6.6 (Polyamide)

COLOUR
NE Black

SELF-EXTINGUISHING
UL 94 V-2

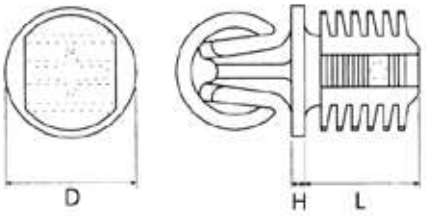

Male

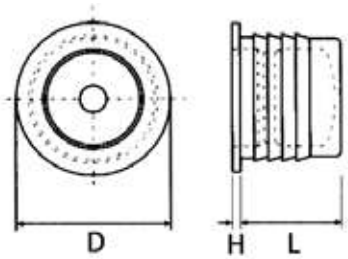

Female

Code NE	D	L	H	Panel hole	Panel thickness	Type	Package (pcs)
MFH01082350N8	9,6	6,5	1	8,25	3,5 ÷ 5,5	Male	15.000
MFH01110300N8	12,7	11,2	1	11 ÷ 11,2	3 ÷ 9	Male	18.000
MFH02103000N8	16	9,5	1,4	10,3	-	Female	15.000
MFH02143000N8	17,8	11,3	1	14,3	-	Female	18.000

MATERIAL
PA6.6 (Polyamide)

COLOUR
NE Black

SELF-EXTINGUISHING
UL 94 V-2

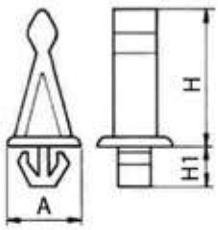

Male

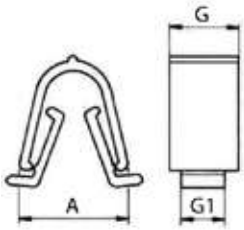

Female

Code NE	A	H	H1	G	G1	Panel hole	Panel thickness	Type	Package (pcs)
MFH03060080N8	11,5	18	6,5	-	-	6 x 6	0,8 ÷ 1,2	Male	2.500
MFH04080080N8	19	-	-	11,8	7,5	8 x 10,5 ÷ 11,5	0,8 ÷ 1	Female	2.500

MATERIAL
POM (Acetal resin)
PA (Polyamide)
AA (Harmonic steel)

COLOUR
NE Black

SELF-EXTINGUISHING
UL 94 V-2

OPERATING TEMPERATURE
-30°C ÷ 80°C

TYPE A

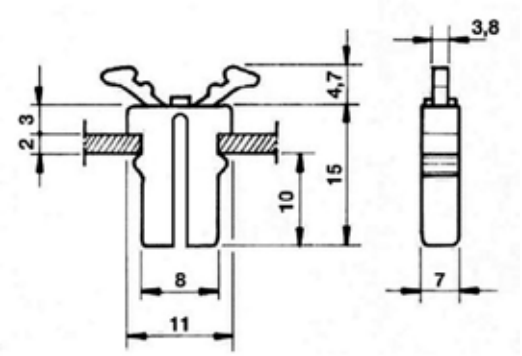

TYPE B

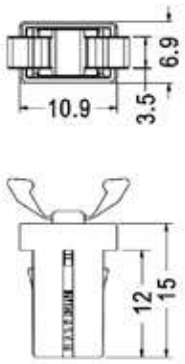

Code NE	Panel thickness	Opening/Closure force (N)	Type	Package (pcs)
MFH06002000N8	2	2 - 5	A	1.000
KGH01708015N8	2	2 - 5	B	1.000

MATERIAL
PA6.6 (Polyamide)

COLOUR
(NA) Natural
(NE) Black

SELF-EXTINGUISHING
UL 94 V-2

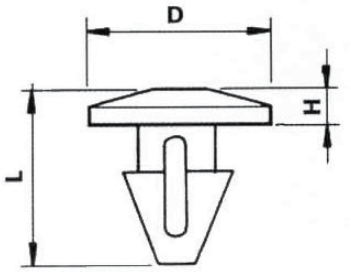

Code (NE)	Code (NA)	D	H	L	Panel hole	Panel thickness	Package (pcs)
-	**MFC0503210000**	7,3	1,7	11,9	3,2 ÷ 3,5	1 ÷ 2,5	5.000
MFC04045300N8	-	8	1	10	4,5	3	30.000
MFC04065450N8	-	10	1,5	11	6,5	4,5	25.000
-	**MFC0406530000**	10	1,5	12	6,5	3	20.000
MFC06045700N8	-	10	1,5	14,5	4,5	7	5.000
MFC04060450N8	-	10 x 18	2	13	6	4,5 ÷ 5	21.000
MFC07065B00N8	-	12	1	20	6,5	11	2.500
MFC04060500N8	-	12,3	2	15	6	5 ÷ 6	2.500
MFC0406035AN8	-	14	2	12,5	6	3,5	12.500
MFC04065850N8	-	15	2,5	19	6,5	8,5	18.000
MFC0604570AN8	-	20	1,5	14,5	4,5	7	10.000

MATERIAL
PA6.6 (Polyamide)

COLOUR
NE Black

SELF-EXTINGUISHING
UL 94 V-2

A TYPE

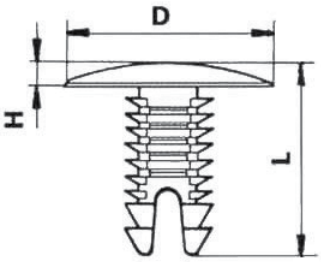

B TYPE

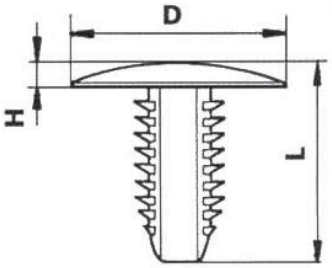

Code NE	D	H	L	Panel hole	Panel thickness	Type	Package (pcs)
MFC02065080N8	18	2	21	6,5	0,8 ÷ 11	A	2.500
MFC02069100N8	18	2	30	6,9	1 ÷ 23,5	A	5.000
MFC02080100N8	18	2	27	8	1 ÷ 16	A	5.000
MFC03038350N8	8	1,5	18,5	3,8	3,5 ÷ 12	B	5.000
MFC03080150N8	22	3,7	23,2	8	1,5 ÷ 12	B	5.000

MATERIAL
PA6.6 (Polyamide)

COLOUR
NE Black
GR Grey

SELF-EXTINGUISHING
UL 94 V-2

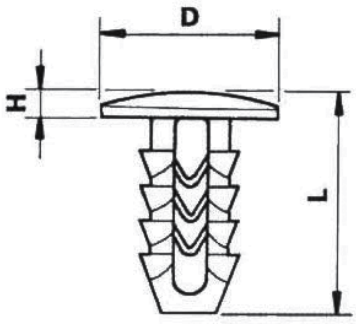

Code NE	Code GR	D	H	L	Panel hole	Panel thickness	Package (pcs)
MFC08052420N8	-	12	2	21,6	5,2	4,2 ÷ 13,3	6.000
MFC08065250N8	-	15	2	14,5	6,5	2,5 ÷ 7,5	10.000
MFC0806530AN8	-	15	2	15	6,5	3 ÷ 8	12.000
MFC0806530BN8	-	15	2	19	6,5	3 ÷ 12	7.000
MFC08065600N8	-	15	2	25	6,5	6 ÷ 18	16.000
MFC08050180N8	-	15	2,2	16	5	1,8 ÷ 10	10.000
MFC08080350N8	-	16	2	19	8	3,5 ÷ 11	16.000
-	**MFC08080480O4**	18	2	24,5	8	4,8 ÷ 16	12.000
MFC0809040BN8	-	18	2,5	24,5	9	4 ÷ 18	4.000
MFC08090400N8	-	19,5	2,5	21,5	9	4 ÷ 14	9.000
MFC08065300N8	-	20	2	12	6,5	3 ÷ 6	7.000
MFC0806525AN8	-	20	2	14,5	6,5	2,5 ÷ 7,5	3.000
MFC0806530CN8	-	20	2	19	6,5	3 ÷ 12	13.000
MFC0806560AN8	-	20	2	25	6,5	6 ÷ 18	12.000
MFC0808035BN8	-	20	2	26,5	8	3,5 ÷ 18,5	9.000
MFC08065450N8	-	20	2	31	6,5	4,5 ÷ 22,5	4.000
MFC0806560CN8	-	20	2	31	6,5	6 ÷ 24	4.000
MFC08080250N8	-	20	3,2	20	8	2,5 ÷ 10,5	10.000
MFC0809040AN8	-	22	2,5	24,5	9	4 ÷ 16	6.000
MFC08085400N8	-	22	2,5	27,5	8,5	4 ÷ 19	5.000
MFC0808035AN8	-	24	2	19	8	3,5 ÷ 11	5.000
MFC0806560BN8	-	25	2	25	6,5	6 ÷ 18	8.000
MFC0809040CN8	-	30	2,5	27,5	9	4 ÷ 19	1.200

MATERIAL
PA6.6 (Polyamide)

COLOUR
(NA) Natural
(BI) White

SELF-EXTINGUISHING
UL 94 V-2

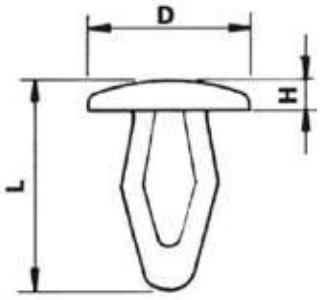

Code (NA)	Code (BI)	D	H	L	Panel hole	Panel thickness	Package (pcs)
MFC0105015000	-	9,5	1,5	12,5	5	1,5 ÷ 3	5.000
-	**MFC01035100N9**	10	2,5	13,5	3,5	1 ÷ 4	10.000
FG0000006FMB1	-	7,4	1,2	9,7	3 ÷ 3,2	2 ÷ 3,5	2.000

MATERIAL
PA6.6 (Polyamide)

COLOUR
(NA) Natural
(NE) Black

SELF-EXTINGUISHING
UL 94 V-2

A TYPE

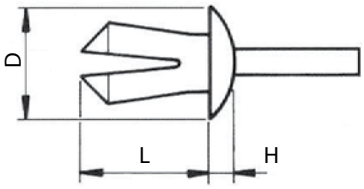

B TYPE

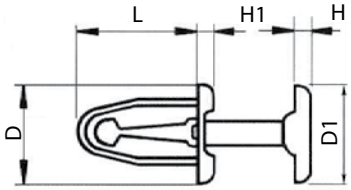

Code (NA)	Code (NE)	D	D1	H	H1	L	Panel hole	Panel thickness	Type	Package (pcs)
-	**KGV03400790N8**	6,5	-	1,5	-	7,9	4,0	1,5 ÷ 6	A	1.000
-	**MFV01047150N8**	7,15	-	2	-	7,4	4,75 ÷ 5,4	1,5 ÷ 5	A	30.000
MFV0104040000	-	7,5	-	1,3	-	9,5	4	4 ÷ 6	A	5.000
MFV0105520000	**MFV01055200N8**	9,5	-	2	-	11,8	5,5	2 ÷ 7,5	A	5.000
-	**MFV01065350N8**	14	-	2	-	15	6,5	3,5 ÷ 11	A	2.500
-	**MFV01065550N8**	15	-	2	-	12	6,5	5,5 ÷ 9,5	A	2.500
-	**MFV01055201N8**	16	-	2	-	10	5,5	2 ÷ 6	A	2.500
-	**MFV01080300N8**	16	-	2	-	13	8	3 ÷ 6	A	1.000
-	**MFV01120100N8**	22	-	10	-	13,6	12	1 ÷ 7	A	2.000
-	**MFV01065500N8**	23	-	2,5	-	12	6,5	5 ÷ 8	A	4.500
MFV0205514000	**MFV02055140N8**	10	10	1,6	1,6	14,5	5,5 ÷ 6,5	1,4 ÷ 2	B	18.000
-	**MFV02065100N8**	10	10	1,6	1,6	18,4	6,5	1 ÷ 8	B	11.000

MATERIAL
PA6.6 (Polyamide)

COLOUR
NE Black

SELF-EXTINGUISHING
UL 94 V-2

USE
Particularly suited in applications where the rivet needs to be removed.

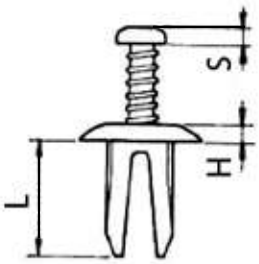

Code NE	D	S	H	L	Panel hole	Panel thickness	Package (pcs)
MFV03062300N8	12,8	3	2	12	6,2 ÷ 6,5	3 ÷ 6	5.000
MFV03080600N8	18	2	2	19	8	6 ÷ 14	2.500
MFV03100600N8	18	2	2	19	10	6 ÷ 14	2.500

9

SPACERS

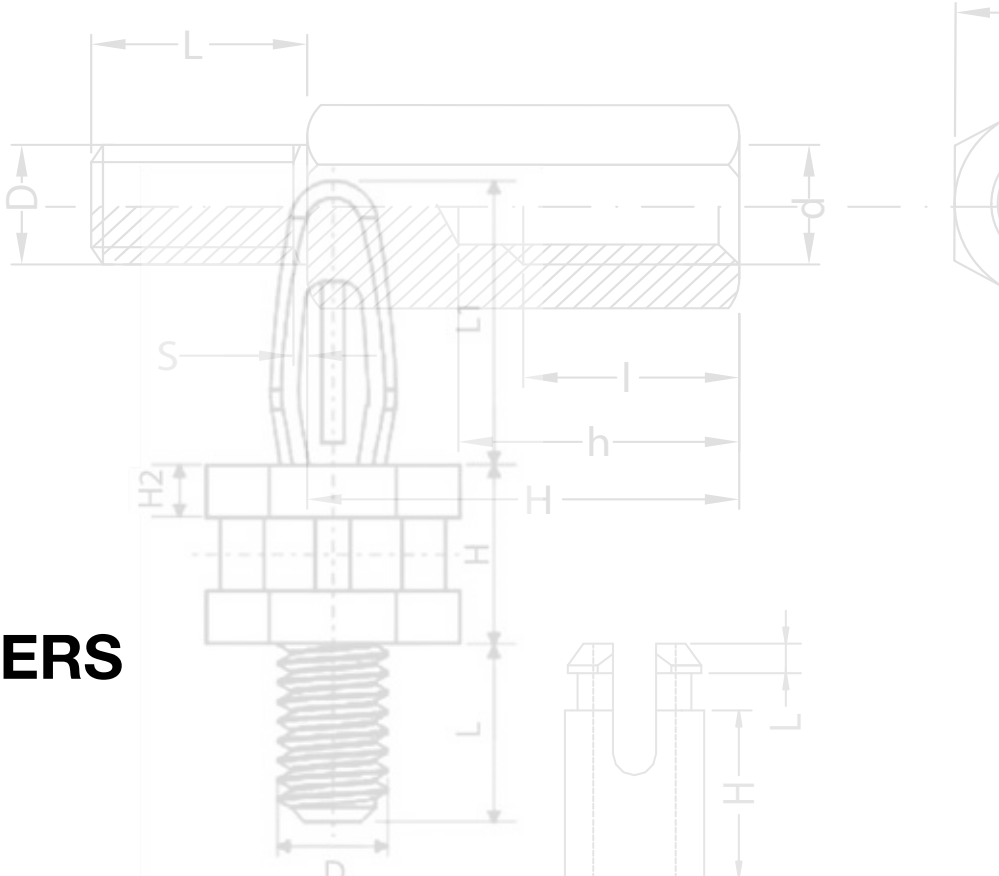

Metal spacers
page 9.1

Plastic spacers and PCB supports - *page 9.6*

HEXAGONAL SPACERS
M/F

MATERIAL - SURFACE TREATMENT
OT58 (Brass) nickel-plated
1.0737 (Steel) white galvanized

NOTES
Available in other materials and dimensions.

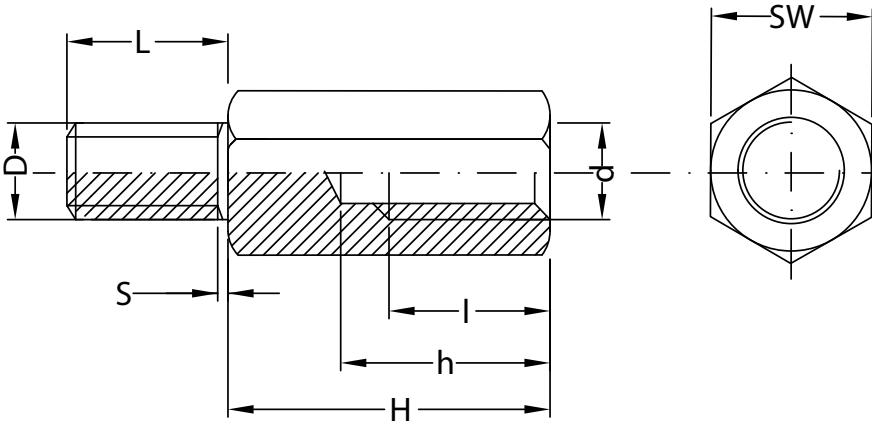

Code OT58 nickel-plated	Code 1.0737 white galvanized	D	d	SW	H	L	l	h	S max	Package (pcs)
BQ8EA02641008	-	M2	M2	4	10	6	6	8,5	0,8	100
BQ8EA02642008	-	M2	M2	4	20	6	8	13	0,8	100
BQ8EA02643008	-	M2	M2	4	30	6	8	13	0,8	50
BQ8EA02644008	-	M2	M2	4	40	6	8	13	0,8	50
BQ8EA25650508	-	M2,5	M2,5	5	5	6	3	4,3	0,9	100
BQ8EA25651008	-	M2,5	M2,5	5	10	6	6	8,5	0,9	100
BQ8EA25651508	-	M2,5	M2,5	5	15	6	8	13	0,9	100
BQ8EA25653008	-	M2,5	M2,5	5	30	6	8	13	0,9	100
BQ8EA03850508	**BQ5EA03850501**	M3	M3	5	5	8	3	4,3	1	100
BQ8EA03851008	**BQ5EA03851001**	M3	M3	5	10	8	6	8,5	1	100
BQ8EA03851508	**BQ5EA03851501**	M3	M3	5	15	8	8	13	1	100
BQ8EA03852008	**BQ5EA03852001**	M3	M3	5	20	8	8	13	1	100
BQ8EA03A52508	**BQ5EA03A52501**	M3	M3	5	25	10	10	15	1	100
BQ8EA03A53508	**BQ5EA03A53501**	M3	M3	5	35	10	10	15	1	100
BQ8EA03A56008	**BQ5EA03A56001**	M3	M3	5	60	10	10	15	1	50
BQ8EA03860508	**BQ5EA03860501**	M3	M3	5,5	5	8	3	4,3	1	100
BQ8EA03861008	**BQ5EA03861001**	M3	M3	5,5	10	8	6	8,5	1	100
BQ8EA03861508	**BQ5EA03861501**	M3	M3	5,5	15	8	8	13	1	100
BQ8EA03861808	**BQ5EA03861801**	M3	M3	5,5	18	8	8	13	1	100
BQ8EA03862008	**BQ5EA03862001**	M3	M3	5,5	20	8	8	13	1	100
BQ8EA03A62508	**BQ5EA03A62501**	M3	M3	5,5	25	10	10	15	1	100
BQ8EA03A63508	**BQ5EA03A63501**	M3	M3	5,5	35	10	10	15	1	50
BQ8EA03A66008	**BQ5EA03A66001**	M3	M3	5,5	60	10	10	15	1	50
BQ8EA04870508	**BQ5EA04870501**	M4	M4	7	5	8	2,5	4	1,4	100
BQ8EA04871008	**BQ5EA04871001**	M4	M4	7	10	8	6	8,5	1,4	100
BQ8EA04871208	**BQ5EA04871201**	M4	M4	7	12	8	8	10	1,4	100
BQ8EA04871508	**BQ5EA04871501**	M4	M4	7	15	8	8	13	1,4	100
BQ8EA04871808	**BQ5EA04871801**	M4	M4	7	18	8	8	15	1,4	100
BQ8EA04A72508	**BQ5EA04A72501**	M4	M4	7	25	10	10	15	1,4	50
BQ8EA04A74008	**BQ5EA04A74001**	M4	M4	7	40	10	10	15	1,4	50

MATERIAL - SURFACE TREATMENT
OT58 (Brass) nickel-plated
1.0737 (Steel) white galvanized

NOTES
Available in other materials and dimensions.

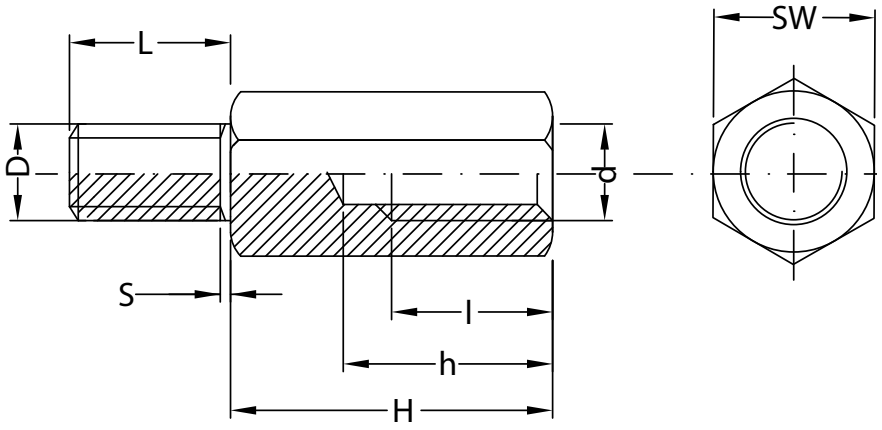

Code OT58 nickel-plated	Code 1.0737 white galvanized	D	d	SW	H	L	l	h	S max	Package (pcs)
BQ8EA04A76008	**BQ5EA04A76001**	M4	M4	7	60	10	10	15	1,4	25
BQ8EA05881008	**BQ5EA05881001**	M5	M5	8	10	8	6	8,5	1,6	50
BQ8EA05881508	**BQ5EA05881501**	M5	M5	8	15	8	8	13	1,6	50
BQ8EA05882008	**BQ5EA05882001**	M5	M5	8	20	8	8	13	1,6	50
BQ8EA05A82508	**BQ5EA05A82501**	M5	M5	8	25	10	10	15	1,6	50
BQ8EA05A83008	**BQ5EA05A83001**	M5	M5	8	30	10	10	15	1,6	50
BQ8EA05A84008	**BQ5EA05A84001**	M5	M5	8	40	10	10	15	1,6	25
BQ8EA05A86008	**BQ5EA05A86001**	M5	M5	8	60	10	10	15	1,6	25
-	**BQ5EA068A1001**	M6	M6	10	10	8	6	8,5	2	50
-	**BQ5EA068A1501**	M6	M6	10	15	8	8	13	2	50
-	**BQ5EA068A2001**	M6	M6	10	20	8	10	15	2	50
-	**BQ5EA06AA3001**	M6	M6	10	30	10	10	15	2	25
-	**BQ5EA06AA4001**	M6	M6	10	40	10	10	15	2	25
-	**BQ5EA06AA5001**	M6	M6	10	50	10	10	15	2	25
-	**BQ5EA06AA6001**	M6	M6	10	60	10	10	15	2	25
-	**BQ5EA08ED4001**	M8	M8	13	40	14	15	20	2,5	10
-	**BQ5EA08ED5001**	M8	M8	13	50	14	15	20	2,5	10
-	**BQ5EA08ED7001**	M8	M8	13	70	14	15	20	2,5	10

MATERIAL - SURFACE TREATMENT
OT58 (Brass) nickel-plated
1.0737 (Steel) white galvanized

NOTES
Available in other materials and dimensions.

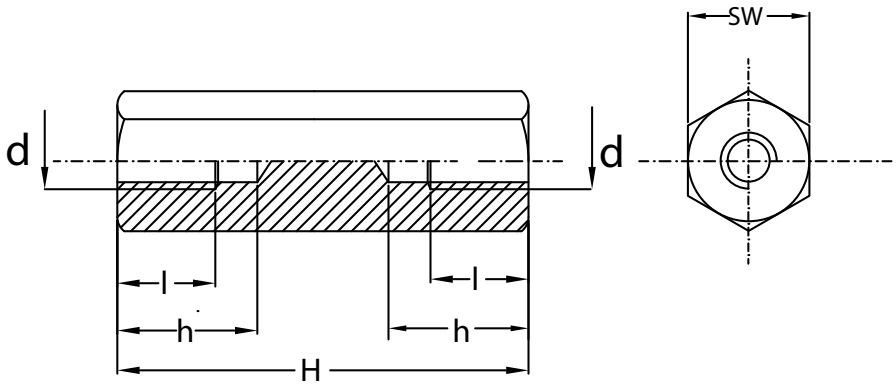

Code OT58 nickel-plated	Code 1.0737 white galvanized	d	SW	H	l	h	Package (pcs)
BQ8EZ02040508	-	M2	4	5	5	5	100
BQ8EZ02040808	-	M2	4	8	8	8	100
BQ8EZ02041008	-	M2	4	10	10	10	100
BQ8EZ02041208	-	M2	4	12	12	12	100
BQ8EZ02041508	-	M2	4	15	15	15	100
BQ8EZ02042008	-	M2	4	20	20	20	100
BQ8EZ25050508	BQ5EZ25050501	M2,5	5	5	5	5	100
BQ8EZ25051008	BQ5EZ25051001	M2,5	5	10	10	10	100
BQ8EZ25051508	BQ5EZ25051501	M2,5	5	15	15	15	100
BQ8EZ25052008	BQ5EZ25052001	M2,5	5	20	20	20	100
BQ8EZ25053008	BQ5EZ25053001	M2,5	5	30	10	30	100
BQ8EZ25054008	BQ5EZ25054001	M2,5	5	40	10	15	100
BQ8EZ03050508	BQ5EZ03050501	M3	5	5	5	5	100
BQ8EZ03050808	BQ5EZ03050801	M3	5	8	8	8	100
BQ8EZ03051008	BQ5EZ03051001	M3	5	10	10	10	100
BQ8EZ03051208	BQ5EZ03051201	M3	5	12	12	12	100
BQ8EZ03051508	BQ5EZ03051501	M3	5	15	15	15	100
BQ8EZ03051808	BQ5EZ03051801	M3	5	18	18	18	100
BQ8EZ03052008	BQ5EZ03052001	M3	5	20	20	20	100
BQ8EZ03052508	BQ5EZ03052501	M3	5	25	10	25	100
BQ8EZ03053008	BQ5EZ03053001	M3	5	30	10	30	100
BQ8EZ03053508	BQ5EZ03053501	M3	5	35	10	15	100
BQ8EZ03054008	BQ5EZ03054001	M3	5	40	10	15	100
BQ8EZ03060508	BQ5EZ03060501	M3	5,5	5	5	5	100
BQ8EZ03060808	BQ5EZ03060801	M3	5,5	8	8	8	100
BQ8EZ03061008	BQ5EZ03061001	M3	5,5	10	10	10	100
BQ8EZ03061208	BQ5EZ03061201	M3	5,5	12	12	12	100
BQ8EZ03061508	BQ5EZ03061501	M3	5,5	15	15	15	100
BQ8EZ03061808	BQ5EZ03061801	M3	5,5	18	18	18	100
BQ8EZ03062008	BQ5EZ03062001	M3	5,5	20	20	20	100
BQ8EZ03062508	BQ5EZ03062501	M3	5,5	25	10	25	100
BQ8EZ03063008	BQ5EZ03063001	M3	5,5	30	10	30	100
BQ8EZ03063508	BQ5EZ03063501	M3	5,5	35	10	15	100
BQ8EZ03064008	BQ5EZ03064001	M3	5,5	40	10	15	50
BQ8EZ03065008	BQ5EZ03065001	M3	5,5	50	10	15	50
BQ8EZ03067008	BQ5EZ03067001	M3	5,5	70	10	15	50
BQ8EZ04070508	BQ5EZ04070501	M4	7	5	5	5	100
BQ8EZ04070808	BQ5EZ04070801	M4	7	8	8	8	100

MATERIAL - SURFACE TREATMENT
OT58 (Brass) nickel-plated
1.0737 (Steel) white galvanized

NOTES
Available in other materials and dimensions.

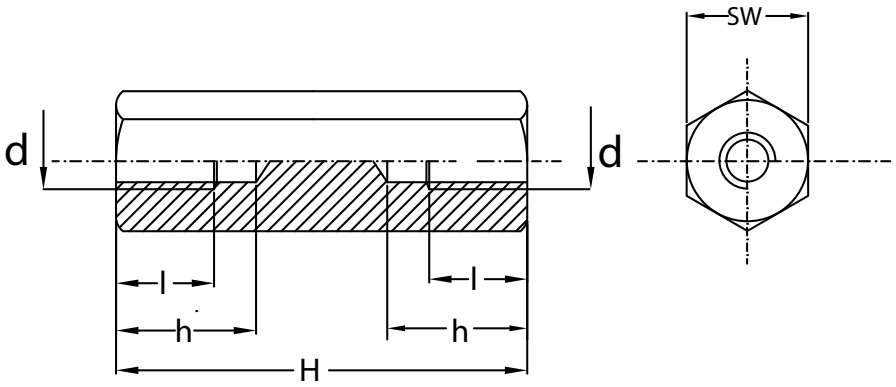

Code OT58 nickel-plated	Code 1.0737 white galvanized	d	SW	H	l	h	Package (pcs)
BQ8EZ04071008	**BQ5EZ04071001**	M4	7	10	10	10	100
BQ8EZ04071208	**BQ5EZ04071201**	M4	7	12	12	12	100
BQ8EZ04071808	**BQ5EZ04071801**	M4	7	18	18	18	100
BQ8EZ04072008	**BQ5EZ04072001**	M4	7	20	20	20	100
BQ8EZ04072508	**BQ5EZ04072501**	M4	7	25	10	25	100
BQ8EZ04073008	**BQ5EZ04073001**	M4	7	30	10	30	50
BQ8EZ04074008	**BQ5EZ04074001**	M4	7	40	10	15	50
BQ8EZ04074508	**BQ5EZ04074501**	M4	7	45	10	15	50
BQ8EZ04075008	**BQ5EZ04075001**	M4	7	50	10	15	50
BQ8EZ05080508	**BQ5EZ05080501**	M5	8	5	5	5	100
BQ8EZ05080808	**BQ5EZ05080801**	M5	8	8	8	8	100
BQ8EZ05081008	**BQ5EZ05081001**	M5	8	10	10	10	100
BQ8EZ05081208	**BQ5EZ05081201**	M5	8	12	12	12	100
BQ8EZ05082008	**BQ5EZ05082001**	M5	8	20	20	20	50
BQ8EZ05082508	**BQ5EZ05082501**	M5	8	25	10	25	50
BQ8EZ05083008	**BQ5EZ05083001**	M5	8	30	10	30	50
BQ8EZ05083508	**BQ5EZ05083501**	M5	8	35	10	15	50
BQ8EZ05084008	**BQ5EZ05084001**	M5	8	40	10	15	50
BQ8EZ05085008	**BQ5EZ05085001**	M5	8	50	10	15	25
BQ8EZ05086008	**BQ5EZ05086001**	M5	8	60	10	15	25
BQ8EZ05087008	**BQ5EZ05087001**	M5	8	70	10	15	25
BQ8EZ05088008	**BQ5EZ05088001**	M5	8	80	10	15	25
-	**BQ5EZ060A1001**	M6	10	10	10	10	50
-	**BQ5EZ060A1201**	M6	10	12	12	12	50
-	**BQ5EZ060A1501**	M6	10	15	15	15	50
-	**BQ5EZ060A2001**	M6	10	20	20	20	50
-	**BQ5EZ060A3501**	M6	10	35	13	35	25
-	**BQ5EZ060A5501**	M6	10	55	13	18	25
-	**BQ5EZ060A8001**	M6	10	80	13	18	25
-	**BQ5EZ080D1501**	M8	13	15	15	15	10
-	**BQ5EZ080D2001**	M8	13	20	20	20	10
-	**BQ5EZ080D3001**	M8	13	30	30	30	10
-	**BQ5EZ080D4001**	M8	13	40	15	40	10
-	**BQ5EZ080D6001**	M8	13	60	15	20	10

MATERIAL - SURFACE TREATMENT
OT58 (Brass) nickel-plated
1.0737 (Steel) white galvanized

NOTES
Available in other materials and dimensions.

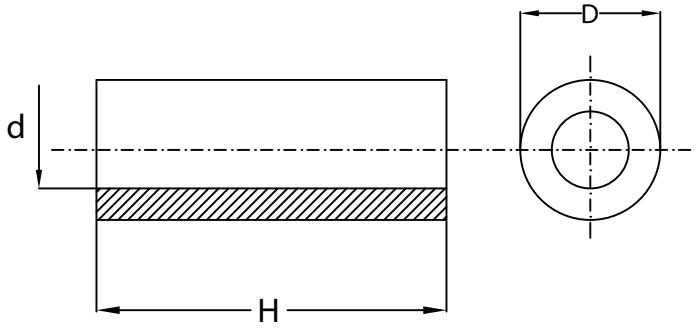

Code OT58 nickel-plated	Code 1.0737 white galvanized	d	D	H	Package (pcs)
BQ8CZ22040208	-	2,2	4	2	250
BQ8CZ22040408	-	2,2	4	4	250
BQ8CZ22040808	-	2,2	4	8	250
BQ8CZ22041208	-	2,2	4	12	100
BQ8CZ22041508	-	2,2	4	15	100
BQ8CZ22043008	-	2,2	4	30	100
BQ8CZ25050208	-	2,5	5	2	250
BQ8CZ25050408	-	2,5	5	4	250
BQ8CZ25050808	-	2,5	5	8	250
BQ8CZ25051208	-	2,5	5	12	100
BQ8CZ25051508	-	2,5	5	15	100
BQ8CZ25053008	-	2,5	5	30	100
BQ8CZ32060208	BQ5CZ32060201	3,2	6	2	250
BQ8CZ32060408	BQ5CZ32060401	3,2	6	4	250
BQ8CZ32060808	BQ5CZ32060801	3,2	6	8	250
BQ8CZ32061008	BQ5CZ32061001	3,2	6	10	100
BQ8CZ32061508	BQ5CZ32061501	3,2	6	15	100
BQ8CZ32061808	BQ5CZ32061801	3,2	6	18	100
BQ8CZ32062008	BQ5CZ32062001	3,2	6	20	100
BQ8CZ32062508	BQ5CZ32062501	3,2	6	25	50
BQ8CZ43080308	BQ5CZ43080301	4,3	8	3	250
BQ8CZ43080508	BQ5CZ43080501	4,3	8	5	250
BQ8CZ43080808	BQ5CZ43080801	4,3	8	8	100
BQ8CZ43081008	BQ5CZ43081001	4,3	8	10	100
BQ8CZ43081208	BQ5CZ43081201	4,3	8	12	100
BQ8CZ43081508	BQ5CZ43081501	4,3	8	15	100
BQ8CZ43082008	BQ5CZ43082001	4,3	8	20	100
BQ8CZ43082508	BQ5CZ43082501	4,3	8	25	50
BQ8CZ53100208	-	5,3	10	2	100
BQ8CZ53100508	-	5,3	10	5	100
BQ8CZ53100808	-	5,3	10	8	100
BQ8CZ53101008	-	5,3	10	10	100
BQ8CZ53101208	-	5,3	10	12	100
BQ8CZ53101508	-	5,3	10	15	100
BQ8CZ53102008	-	5,3	10	20	100
BQ8CZ53102508	-	5,3	10	25	50
BQ8CZ53103008	-	5,3	10	30	50

MATERIAL
PA6.6 (Polyamide)

COLOUR
NE Black

SELF-EXTINGUISHING
UL 94 V-2

OPERATING TEMPERATURE
-40°C ÷ 85°C

NOTES
Available in natural polyamide colour and in other dimensions.

PURCHASE ORDER EXAMPLE
LZEBS8480**12**N8 (indicate the Length "H" available in 1mm increments).

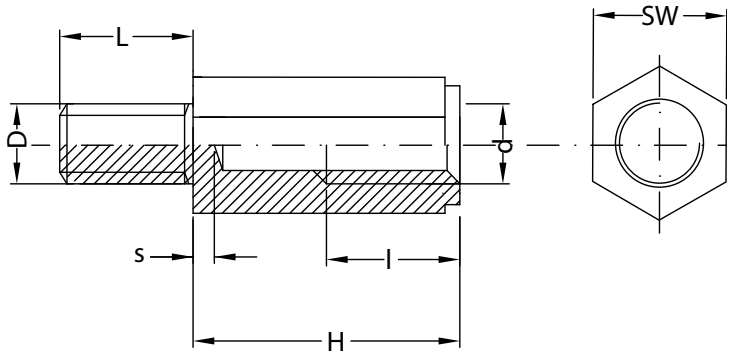

Code NE	D	d	SW	Variable H (**)	L	l (variable)	s	Package (pcs)
LZEAS7500N8**	M2,5	M2,5	5	4÷45	8	2,5÷10	-	500
LZEAS8190N**	M2,5	M2,5	6	4÷45	8	2,5÷10	-	500
LZEBS7380N8**	M2,5	M3	5	4÷45	8	3÷10	2÷7	500
LZEAS7800N8**	M3	M2,5	5	4÷55	6	3,5÷10	-	500
LZEBS8480N8**	M3	M3	5	4÷61	8	3÷10	1÷7	500
LZEBS7590N8**	M3	M3	5,5	4÷61	6	3÷10	2÷7	500
LZEBS6620N8**	M3	M3	5,5	4÷61	8	3÷10	2÷7	500
LZEBS2500N8**	M3	M3	6	5÷61	8	3÷10	2÷7	500
LZEBS4500N8**	M3	M3	8	4÷61	8	3÷10	2÷7	500
LZEBS6290N8**	M4	M3	8	4÷61	8	3÷10	2÷7	500
LZEBS8460N8**	M4	M4	7	5÷61	8	10	2÷7	500
LZEBS4980N8**	M4	M4	8	5÷70	5	3÷10	2÷7	500
LZEBS5410N8**	M4	M4	8	5÷70	7	3÷10	2÷7	500
LZEBS3500N8**	M4	M4	8	5÷70	8	3÷10	2÷7	500
LZEBS6500N8**	M5	M5	10	8÷70	8	6÷10	2÷7	500
LZEBS5150N8**	M5	M5	10	8÷65	10	10	2÷7	500
LZEBS7220N8**	M6	M6	10	12÷70	8	10	2÷7	500
LZEBS7230N8**	M6	M6	10	6÷70	10	10	2÷7	500

MATERIAL
PA6-CV25% (Glass-filled polyamide)

COLOUR
NE Black

SELF-EXTINGUISHING
UL 94 V-2

OPERATING TEMPERATURE
-40°C ÷ 85°C

NOTES
Available in natural polyamide colour and in other dimensions.

PURCHASE ORDER EXAMPLE
LZEXJ1210**21**N8 (indicate the Length "H" available in 1mm increments).

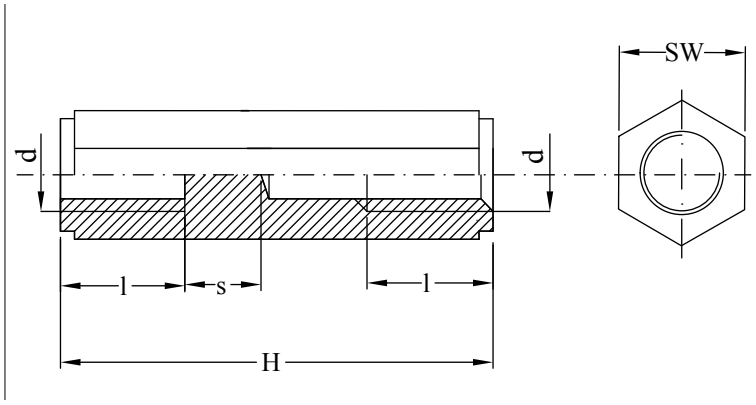

Code NE	d	SW	Variable H (**)	l	s	Package (pcs)
LZEWJ3050N8**	M2	5	5÷45	5÷10	-	500
LZEWJ2310N8**	M2,5	5	5÷55	5÷10	-	500
LZEXJ1210N8**	M3	6	3÷75	3÷10	0,5÷15	500
LZEXJ2290N8**	M3	7	5÷65	5÷10	0,5÷15	500
LZEXJ2240N8**	M3	8	5÷65	5÷10	0,5÷15	500
LZEXJ7640N8**	M4	7	5÷68	5÷10	0,5÷15	500
LZEXJ1280N8**	M4	8	5÷75	5÷10	0,5÷15	500
LZEXJ1390N8**	M5	10	5÷75	5÷10	0,5÷20	500
LZEXJ3080N8**	M6	10	4÷75	4÷10	0,5÷20	500

MATERIAL
PA6.6 (Polyamide)

COLOUR
(NE) Black

SELF-EXTINGUISHING
UL 94 V-2

OPERATING TEMPERATURE
-30°C ÷ 110°C

NOTES
Available in natural polyamide colour and in other dimensions.

PURCHASE ORDER EXAMPLE
LZCXJ61802N8 (indicate the Length "H" available in 1mm increments).

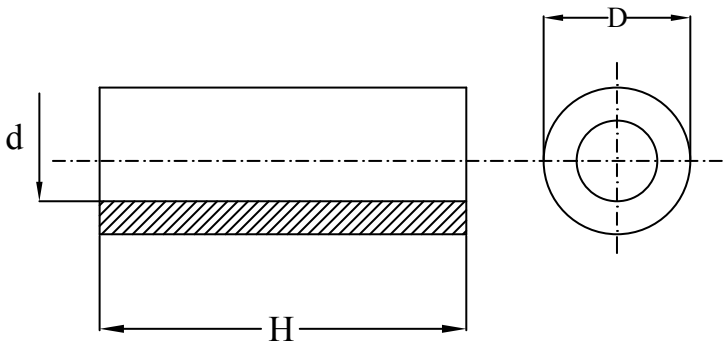

Code (NE)	d	D	H	Package (pcs)
LZCXJ6180N8**	1,5	4	2 ÷ 20	500
LZCXJ2380N8**	2,2	4	1 ÷ 50	500
LZCXJ6190N8**	2,2	5	2 ÷ 45	500
LZCXJ1270N8**	2,2	6	2 ÷ 50	500
LZCXJ8400N8**	2,7	4	2 ÷ 30	500
LZCXJ2440N8**	2,7	5	2 ÷ 55	500
LZCXJ2410N8**	2,7	6	2 ÷ 55	500
LZCXJ4660N8**	3	4	2 ÷ 20	500
LZCXJ3280N8**	3,2	5	2 ÷ 50	500
LZCXJ4690N8**	3,2	6	2 ÷ 60	500
LZCXJ1170N8**	3,2	10	2 ÷ 20	500
LZCXJ8630N8**	3,2	11	2 ÷ 20	500
LZCXJ7160N8**	3,4	5	3 ÷ 45	500
LZCXJ8340N8**	3,4	5,5	2 ÷ 60	500
LZCXJ0960N8**	3,4	6	2 ÷ 60	500
LZCXJ1410N8**	3,4	7	2 ÷ 60	500
LZCXJ7200N8**	3,5	4,8	2 ÷ 45	500
LZCXJ4420N8**	3,5	8	2 ÷ 50	500
LZCXJ2120N8**	4,1	6	2 ÷ 54	500
LZCXJ7850N8**	4,1	8	2 ÷ 60	500
LZCXJ0970N8**	4,2	8	2 ÷ 60	500
LZCXJ7660N8**	4,2	9	1 ÷ 59	500
LZCXJ6880N8**	4,2	10	2 ÷ 40	500
LZCXJ7810N8**	4,2	12	3 ÷ 58	500
LZCXJ8150N8**	4,3	6,4	2 ÷ 60	500
LZCXJ8530N8**	4,5	6	2 ÷ 54	500
LZCXJ1250N8**	4,5	7	2 ÷ 53	500
LZCXJ6490N8**	4,7	6	2 ÷ 45	500
LZCXJ1930N8**	5	7	2 ÷ 50	500
LZCXJ8380N8**	5,2	8	2 ÷ 60	500

MATERIAL
PA6.6 (Polyamide)

COLOUR
NE Black

SELF-EXTINGUISHING
UL 94 V-2

OPERATING TEMPERATURE
-30°C ÷ 110°C

NOTES
Available in natural polyamide colour and in other dimensions.

PURCHASE ORDER EXAMPLE
LZCXJ61802N8 (indicate the Length "H" available in 1mm increments).

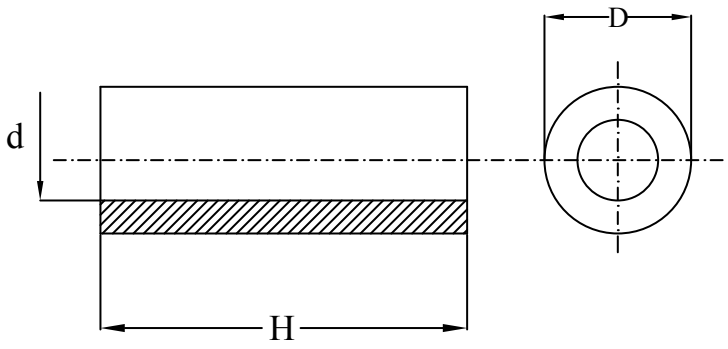

Code NE	d	D	H	Package (pcs)
LZCXJ1070N8**	5,2	10	2 ÷ 57	500
LZCXJ2550N8**	5,2	12	2 ÷ 58	500
LZCXJ7880N8**	5,2	20	2 ÷ 20	500
LZCXJ7000N8**	5,5	8,5	2 ÷ 60	500
LZCXJ6260N8**	6,2	8	2 ÷ 63	500
LZCXJ4230N8**	6,2	9	2 ÷ 63	500
LZCXJ1120N8**	6,2	10	2 ÷ 30	500
LZCXJ1680N8**	6,2	12	2 ÷ 65	500
LZCXU6990N8**	6,2	16	3 ÷ 30	500
LZCXJ6300N8**	6,4	8	2 ÷ 50	500
LZCXJ8210N8**	7	9	2 ÷ 50	500
LZCXJ7460N8**	7	10	2 ÷ 60	500
LZCXJ5240N8**	8,2	10	2 ÷ 63	500
LZCXJ1110N8**	8,2	12	2 ÷ 63	500
LZCXJ6140N8**	8,2	14	2 ÷ 50	500
LZCXJ5270N8**	9,1	12	2 ÷ 65	500
LZCXJ7740N8**	9,5	14	2 ÷ 50	500
LZCXJ2160N8**	9,6	12	2 ÷ 50	500
LZCXJ8060N8**	10,4	15	2 ÷ 50	500
LZCXU1360N8**	10,4	16	2 ÷ 50	500
LZCXJ8410N8**	11,2	15	2 ÷ 50	500
LZCXJ8320N8**	12,2	14	2 ÷ 15	500
LZCXJ1130N8**	12,4	16	3 ÷ 55	500
LZCXJ7770N8**	18,2	25,2	2 ÷ 20	500

MATERIAL
PA6.6 (Polyamide)

COLOUR
(NA) Natural

ADHESIVE
Rubber base

SELF-EXTINGUISHING
UL 94 V-2

OPERATING TEMPERATURE
-35° ÷ 85°

USE
For printed circuits

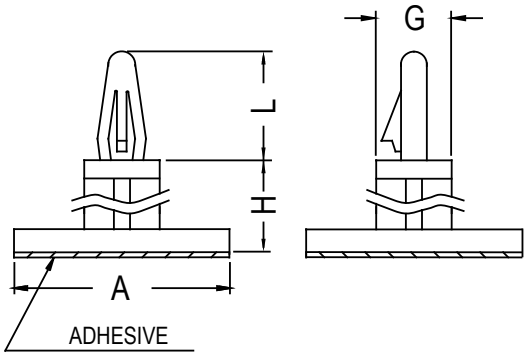

Code (NA)	H	L	A	G	Panel hole	Panel thickness	Package (pcs)
KGS0204600000	4,6	10	20	7	4	1,2 ÷ 1,7	500
KGS0205500000	5,5	10	20	7	4	1,2 ÷ 1,7	500
KGS0207200000	7,2	10	20	7	4	1,2 ÷ 1,7	500
KGS0209000000	9	10	20	7	4	1,2 ÷ 1,7	500
KGS0211800000	11,8	10,2	18	6,9	4	1,6	500
KGS0212000000	12	10	20	7	4	1,2 ÷ 1,7	500
KGS0215400000	15,4	10	20	7	4	1,2 ÷ 1,7	500
KGS0215340000	15,34	8	17,8	7,1	4	1,6	500
KGS0218500000	18,5	10	18	6,8	4	1,2 ÷ 2	500

MATERIAL
PA6.6 (Polyamide)

COLOUR
(NA) Natural

SELF-EXTINGUISHING
UL 94 V-2

OPERATING TEMPERATURE
-35° ÷ 85°

USE
For printed circuits

TYPE 1

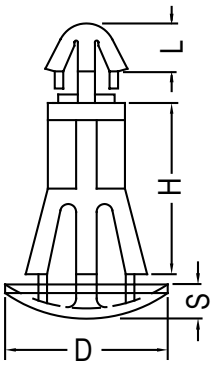

TYPE 2

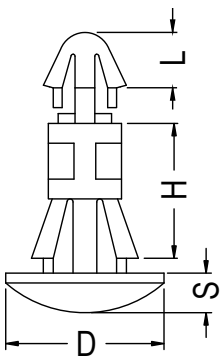

Code (NA)	H	L	S	D	Panel hole Side A	Panel hole Side B	Thickness Side A	Thickness Side B	Type	Package (pcs)
KGS3703500000	3,5	2,8	2	9,5	3	5,5	1,2 ÷ 1,7	0,6 ÷ 1,2	1	1.000
KGS3704800000	4,8	2,8	2	9,5	3	5,5	1,2 ÷ 1,7	0,6 ÷ 1,2	1	1.000
KGS3706300000	6,35	2,8	2	9,5	3	5,5	1,2 ÷ 1,7	0,6 ÷ 1,2	1	1.000
KGS3707000000	7	2,8	2	9,5	3	5,5	1,2 ÷ 1,7	0,6 ÷ 1,2	1	1.000
KGS3708000000	8	2,8	2	9,5	3	5,5	1,2 ÷ 1,7	0,6 ÷ 1,2	1	1.000
KGS3710000000	10	2,8	2	9,5	3	5,5	1,2 ÷ 1,7	0,6 ÷ 1,2	1	1.000
KGS3711000000	11	2,8	2	9,5	3	5,5	1,2 ÷ 1,7	0,6 ÷ 1,2	1	1.000
KGS3712700000	12,7	2,8	2	9,5	3	5,5	1,2 ÷ 1,7	0,6 ÷ 1,2	1	1.000
KGS3715900000	15,9	2,8	2	9,5	3	5,5	1,2 ÷ 1,7	0,6 ÷ 1,2	1	1.000
KGS3603200000	3,2	2,8	2	8	3	4	1,6	0,8 ÷ 1,6	2	2.000
KGS3604000000	4	2,8	2	8	3	4	1,6	0,8 ÷ 1,6	2	2.000
KGS3604500000	4,5	2,8	2	8	3	4	1,6	0,8 ÷ 1,6	2	2.000
KGS3605000000	5	2,8	2	8	3	4	1,6	0,8 ÷ 1,6	2	2.000
KGS3605500000	5,5	2,8	2	8	3	4	1,6	0,8 ÷ 1,6	2	2.000
KGS3606000000	6	2,8	2	8	3	4	1,6	1,6	2	2.000
KGS3606400000	6,4	2,8	2	8	3	4	1,6	1,6	2	2.000
KGS3607000000	7	2,8	2	8	3	4	1,6	1,6	2	1.000
KGS3607500000	7,5	2,8	2	8	3	4	1,6	1,6	2	1.000
KGS3608000000	8	2,8	2	8	3	4	1,6	1,6	2	1.000
KGS3609000000	9	2,8	2	8	3	4	1,6	1,6	2	1.000
KGS3609500000	9,5	2,8	2	8	3	4	1,6	1,6	2	1.000
KGS3610000000	10	2,8	2	8	3	4	1,6	1,6	2	1.000
KGS3611100000	11,1	2,8	2	8	3	4	1,6	1,6	2	1.000
KGS3612000000	12	2,8	2	8	3	4	1,6	1,6	2	1.000
KGS3612700000	12,7	2,8	2	8	3	4	1,6	1,6	2	1.000
KGS3614000000	14	2,8	2	8	3	4	1,6	1,6	2	1.000
KGS3616000000	16	2,8	2	8	3	4	1,6	1,6	2	1.000

MATERIAL
PA6.6 (Polyamide)

COLOUR
(NA) Natural

SELF-EXTINGUISHING
UL 94 V-2

OPERATING TEMPERATURE
-35° ÷ 85°

USE
For printed circuits

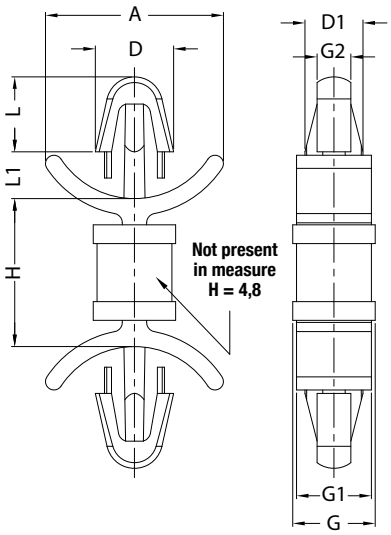

Code (NA)	H	L	L1	A	D	D1	G	G1	G2	Panel hole	Panel thickness	Package (pcs)
YAS0104832000	4,8	4	2,5	9,5	4,18	3,1	4,4	4	1,8	3,18	0,79 ÷ 1,98	1.000
FG00806400000	6,4	4	2,5	9,5	4,18	3,1	4,4	4	1,8	3,18	0,79 ÷ 1,98	1.000
YAS0107932000	7,9	4	2,5	9,5	4,18	3,1	4,4	4	1,8	3,18	0,79 ÷ 1,98	1.000
FG00809500000	9,5	4	2,5	9,5	4,18	3,1	4,4	4	1,8	3,18	0,79 ÷ 1,98	1.000
FG00811100000	11,1	4	2,5	9,5	4,18	3,1	4,4	4	1,8	3,18	0,79 ÷ 1,98	1.000
FG00812700000	12,7	4	2,5	9,5	4,18	3,1	4,4	4	1,8	3,18	0,79 ÷ 1,98	1.000
FG00814300000	14,3	4	2,5	9,5	4,18	3,1	4,4	4	1,8	3,18	0,79 ÷ 1,98	1.000
FG00815900000	15,9	4	2,5	9,5	4,18	3,1	4,4	4	1,8	3,18	0,79 ÷ 1,98	1.000
FG00822200000	22,2	4	2,5	9,5	4,18	3,1	4,4	4	1,8	3,18	0,79 ÷ 1,98	1.000

REVERSE LOCKING PCB SUPPORT

self-locking - type 2

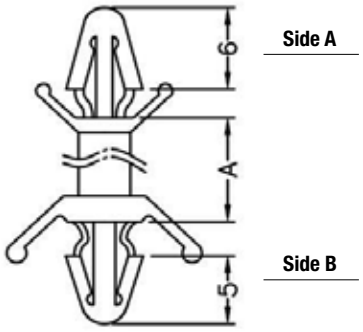

MATERIAL
PA6.6 (Polyamide)

COLOUR
(NA) Natural

SELF-EXTINGUISHING
UL 94 V-2

OPERATING TEMPERATURE
-35° ÷ 85°

USE
For printed circuits

Code (NA)	A	Panel hole Side A	Panel hole Side B	Panel thickness Side A	Panel thickness Side B	Package (pcs)
KGS0403800000	3,8	4	4,8	1,6	0,8÷ 2,2	1.000
KGS0404600000	4,6	4	4,8	1,6	0,8÷ 2,2	1.000
KGS0406300000	6,3	4	4,8	1,6	0,8÷ 2,2	1.000
KGS0407900000	7,93	4	4,8	1,6	0,8÷ 2,2	1.000
KGS0409200000	9,2	4	4,8	1,6	0,8÷ 2,2	1.000
KGS0412500000	12,5	4	4,8	1,6	0,8÷ 2,2	1.000
KGS0415700000	15,7	4	4,8	1,6	0,8÷ 2,2	1.000
KGS0419000000	19	4	4,8	1,6	0,8÷ 2,2	1.000
KGS0422000000	22	4	4,8	1,6	0,8÷ 2,2	1.000
KGS0425400000	25,4	4	4,8	1,6	0,8÷ 2,2	1.000
KGS0428600000	28,6	4	4,8	1,6	0,8÷ 2,2	1.000

MATERIAL
PA6.6 (Polyamide)

COLOUR
(NA) Natural

SELF-EXTINGUISHING
UL 94 V-2

OPERATING TEMPERATURE
-35° ÷ 85°

USE
For printed circuits

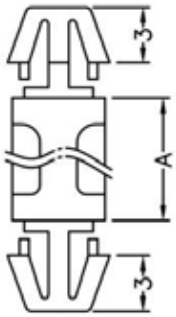

Code (NA)	A	Panel hole	Panel thickness	Package (pcs)
KGS1303000000	3	4	1,2 ÷ 1,7	1.000
KGS1303500000	3,5	4	1,2 ÷ 1,7	1.000
KGS1304000000	4	4	1,2 ÷ 1,7	1.000
KGS1305000000	5	4	1,2 ÷ 1,7	1.000
KGS1306000000	6	4	1,2 ÷ 1,7	1.000
KGS1306400000	6,4	4	1,2 ÷ 1,7	1.000
KGS1307000000	7	4	1,2 ÷ 1,7	1.000
KGS1308000000	8	4	1,2 ÷ 1,7	1.000
KGS1309500000	9,5	4	1,2 ÷ 1,7	1.000
KGS1310000000	10	4	1,2 ÷ 1,7	1.000
KGS1310500000	10,5	4	1,2 ÷ 1,7	1.000
KGS1311500000	11,5	4	1,2 ÷ 1,7	1.000
KGS1312000000	12	4	1,2 ÷ 1,7	1.000
KGS1312700000	12,7	4	1,2 ÷ 1,7	1.000
KGS1314000000	14	4	1,2 ÷ 1,7	1.000
KGS1315900000	15,9	4	1,2 ÷ 1,7	1.000
KGS1318000000	18	4	1,2 ÷ 1,7	1.000
KGS1319000000	19	4	1,2 ÷ 1,7	1.000
KGS1320000000	20	4	1,2 ÷ 1,7	1.000
KGS1325000000	25	4	1,2 ÷ 1,7	1.000
KGS1325400000	25,4	4	1,2 ÷ 1,7	1.000
KGS1327000000	27	4	1,2 ÷ 1,7	1.000
KGS1330000000	30	4	1,2 ÷ 1,7	1.000
KGS1334000000	34	4	1,2 ÷ 1,7	1.000
KGS1340000000	40	4	1,2 ÷ 1,7	1.000
KGS1355000000	55	4	1,2 ÷ 1,7	1.000
KGS1369000000	69	4	1,2 ÷ 1,7	1.000
KGS1371000000	71	4	1,2 ÷ 1,7	1.000
KGS1372000000	72	4	1,2 ÷ 1,7	1.000
KGS1374000000	74,2	4	1,2 ÷ 1,7	1.000
KGS1380000000	80	4	1,2 ÷ 1,7	1.000

DOUBLE LOCKING PCB SUPPORT
quick - type 1

MATERIAL
PA6.6 (Polyamide)

COLOUR
(NA) Natural

SELF-EXTINGUISHING
UL 94 V-2

OPERATING TEMPERATURE
-35° ÷ 85°

USE
For printed circuits

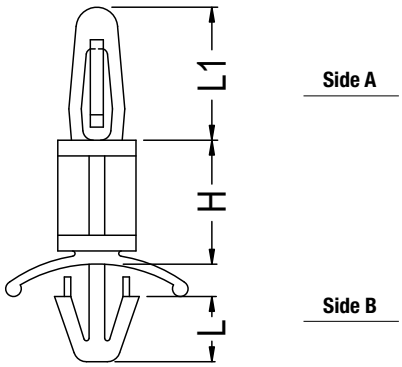

Code (NA)	H	L	L1	Panel hole Side A	Panel hole Side B	Panel thickness Side A	Panel thickness Side B	Package (pcs)
KGS2103500000	3,5	5	10,2	4	4,8	1,6	0,8 ÷ 2	1.000
KGS2104800000	4,8	5	10,2	4	4,8	1,6	0,8 ÷ 2	1.000
KGS2106000000	6	5	10,2	4	4,8	1,6	0,8 ÷ 2	1.000
KGS2106400000	6,4	5	10,2	4	4,8	1,6	0,8 ÷ 2	1.000
KGS2107900000	7,9	5	10,2	4	4,8	1,6	0,8 ÷ 2	1.000
KGS2109500000	9,5	5	10,2	4	4,8	1,6	0,8 ÷ 2	1.000
KGS2111100000	11,1	5	10,2	4	4,8	1,6	0,8 ÷ 2	1.000
KGS2112700000	12,7	5	10,2	4	4,8	1,6	0,8 ÷ 2	1.000
KGS2115900000	15,9	5	10,2	4	4,8	1,6	0,8 ÷ 2	1.000
KGS2119100000	19,1	5	10,2	4	4,8	1,6	0,8 ÷ 2	1.000
KGS2122200000	22,2	5	10,2	4	4,8	1,6	0,8 ÷ 2	1.000
KGS2124000000	24	5	10,2	4	4,8	1,6	0,8 ÷ 2	1.000
KGS2125400000	25,4	5	10,2	4	4,8	1,6	0,8 ÷ 2	1.000
KGS2127500000	27,5	5	10,2	4	4,8	1,6	0,8 ÷ 2	1.000
KGS2128600000	28,6	5	10,2	4	4,8	1,6	0,8 ÷ 2	1.000
KGS2131100000	31,1	5	10,2	4	4,8	1,6	0,8 ÷ 2	1.000
KGS2131700000	31,7	5	10,2	4	4,8	1,6	0,8 ÷ 2	1.000
KGS2134900000	34,9	5	10,2	4	4,8	1,6	0,8 ÷ 2	1.000

MATERIAL
PA6.6 (Polyamide)

COLOUR
(NA) Natural

SELF-EXTINGUISHING
UL 94 V-2

OPERATING TEMPERATURE
-35° ÷ 85°

USE
For printed circuits

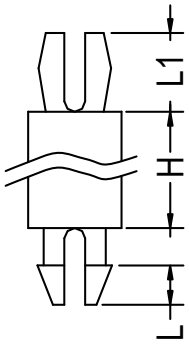

Code (NA)	H	L	L1	Panel hole	Panel thickness	Package (pcs)
KGS3103200000	3,2	1,85	3,8	3,2	1,6	1.000
KGS3104800000	4,8	1,85	3,8	3,2	1,6	1.000
KGS3106400000	6,4	1,85	3,8	3,2	1,6	1.000
KGS3107900000	7,9	1,85	3,8	3,2	1,6	1.000
KGS3108600000	8,6	1,85	3,8	3,2	1,6	1.000
KGS3109500000	9,5	1,85	3,8	3,2	1,6	1.000
KGS3110000000	10	1,85	3,8	3,2	1,6	1.000
KGS3111100000	11,1	1,85	3,8	3,2	1,6	1.000
KGS3112700000	12,7	1,85	3,8	3,2	1,6	1.000
KGS3114300000	14,3	1,85	3,8	3,2	1,6	1.000
KGS3115900000	15,9	1,85	3,8	3,2	1,6	1.000
KGS3116000000	16	1,85	3,8	3,2	1,6	1.000
KGS3117500000	17,5	1,85	3,8	3,2	1,6	1.000
KGS3119100000	19,1	1,85	3,8	3,2	1,6	1.000
KGS3120600000	20,6	1,85	3,8	3,2	1,6	1.000
KGS3121000000	21	1,85	3,8	3,2	1,6	1.000
KGS3122200000	22,2	1,85	3,8	3,2	1,6	1.000
KGS3125400000	25,4	1,85	3,8	3,2	1,6	1.000
KGS3127000000	27	1,85	3,8	3,2	1,6	1.000
KGS3128500000	28,5	1,85	3,8	3,2	1,6	1.000
KGS3129200000	29,2	1,85	3,8	3,2	1,6	1.000
KGS3131700000	31,7	1,85	3,8	3,2	1,6	1.000
KGS3131800000	31,8	1,85	3,8	3,2	1,6	1.000
KGS3134900000	34,9	1,85	3,8	3,2	1,6	1.000
KGS3138100000	38,1	1,85	3,8	3,2	1,6	1.000

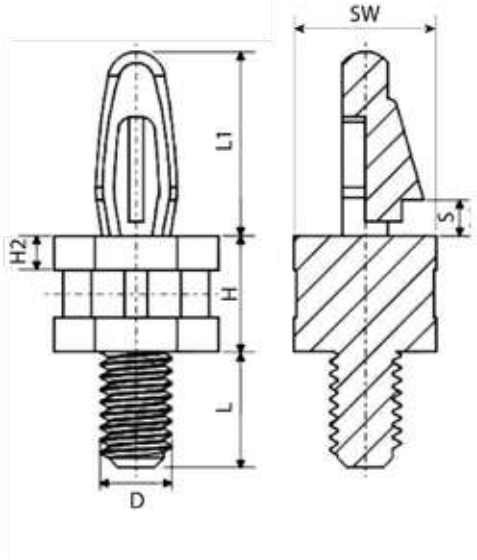

MATERIAL
PA6.6 (Polyamide)

COLOUR
(NA) Natural

SELF-EXTINGUISHING
UL 94 V-2

OPERATING TEMPERATURE
-35° ÷ 85°

USE
For printed circuits

Code (NA)	H	L	L1	D	S	H2	Panel hole	Panel thickness	SW	Package (pcs)
FG00704080400	4,8	6,4	10,2	M4	2	1,9	4	1,57	8	1.000
FG00704080600	6,4	6,4	10,2	M4	2	1,9	4	1,57	8	1.000
FG00704080900	9,5	6,4	10,2	M4	2	1,9	4	1,57	8	1.000
FG00704081100	11,1	6,4	10,2	M4	2	1,9	4	1,57	8	1.000
FG00704081200	12,7	6,4	10,2	M4	2	1,9	4	1,57	8	1.000
FG00704081500	15,9	6,4	10,2	M4	2	1,9	4	1,57	8	1.000
FG00704081900	19,1	6,4	10,2	M4	2	1,9	4	1,57	8	1.000
FG00704082000	20	6,4	10,2	M4	2	1,9	4	1,57	8	1.000
FG00704082200	22,2	6,4	10,2	M4	2	1,9	4	1,57	8	1.000
FG00704082500	25,4	6,4	10,2	M4	2	1,9	4	1,57	8	1.000
FG00704082800	28,6	6,4	10,2	M4	2	1,9	4	1,57	8	1.000
FG00704083100	31,7	6,4	10,2	M4	2	1,9	4	1,57	8	1.000
FG00704083400	34,9	6,4	10,2	M4	2	1,9	4	1,57	8	1.000
FG00704083500	35,7	6,4	10,2	M4	2	1,9	4	1,57	8	1.000

MATERIAL
PA6.6 (Polyamide)

COLOUR
(NA) Natural

SELF-EXTINGUISHING
UL 94 V-2

OPERATING TEMPERATURE
-35° ÷ 85°

USE
For printed circuits

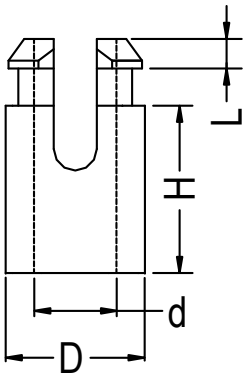

Code (NA)	H	D	d	L	Panel hole	Panel thickness	Package (pcs)
KGS4103000000	3	7,1	4,2	1,5	5,9	1,2 ÷ 1,7	1.000
KGS4104000000	4	7,1	4,2	1,5	5,9	1,2 ÷ 1,7	1.000
KGS4104600000	4,6	7,1	4,2	1,5	5,9	1,2 ÷ 1,7	1.000
KGS4105000000	5	7,1	4,2	1,5	5,9	1,2 ÷ 1,7	1.000
KGS4106400000	6,4	7,1	4,2	1,5	5,9	1,2 ÷ 1,7	1.000
KGS4107900000	7,9	7,1	4,2	1,5	5,9	1,2 ÷ 1,7	1.000
KGS4109500000	9,5	7,1	4,2	1,5	5,9	1,2 ÷ 1,7	1.000
KGS4111100000	11,1	7,1	4,2	1,5	5,9	1,2 ÷ 1,7	1.000
KGS4112000000	12	7,1	4,2	1,5	5,9	1,2 ÷ 1,7	1.000
KGS4112700000	12,7	7,1	4,2	1,5	5,9	1,2 ÷ 1,7	1.000
KGS4115900000	15,9	7,1	4,2	1,5	5,9	1,2 ÷ 1,7	1.000
KGS4117000000	17	7,1	4,2	1,5	5,9	1,2 ÷ 1,7	1.000
KGS4119100000	19,1	7,1	4,2	1,5	5,9	1,2 ÷ 1,7	1.000
KGS4122200000	22,2	7,1	4,2	1,5	5,9	1,2 ÷ 1,7	500
KGS4125400000	25,4	7,1	4,2	1,5	5,9	1,2 ÷ 1,7	500
KGS4130000000	30	7,1	4,2	1,5	5,9	1,2 ÷ 1,7	500

MATERIAL
PA6.6 (Polyamide)

COLOUR
(NA) Natural

SELF-EXTINGUISHING
UL 94 V-2

OPERATING TEMPERATURE
-35° ÷ 85°

USE
For printed circuits

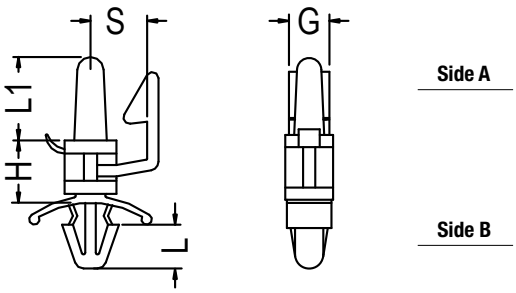

Code (NA)	H	L	L1	G	S	Panel hole Side A	Panel hole Side B	Panel thickness Side A	Panel thickness Side B	Package (pcs)
KGS4406300000	6,3	5	9,5	5	6,3	4	4,8	1,6 ÷ 1,8	0,5 ÷ 2	1.000
KGS4408000000	8	5	9,5	5	6,3	4	4,8	1,6 ÷ 1,8	0,5 ÷ 2	1.000
KGS4409500000	9,5	5	9,5	5	6,3	4	4,8	1,6 ÷ 1,8	0,5 ÷ 2	1.000
KGS4410000000	10	5	9,5	5	6,3	4	4,8	1,6 ÷ 1,8	0,5 ÷ 2	1.000
KGS4412700000	12,7	5	9,5	5	6,3	4	4,8	1,6 ÷ 1,8	0,5 ÷ 2	1.000
KGS4415900000	15,9	5	9,5	5	6,3	4	4,8	1,6 ÷ 1,8	0,5 ÷ 2	1.000
KGS4419100000	19,1	5	9,5	5	6,3	4	4,8	1,6 ÷ 1,8	0,5 ÷ 2	1.000
KGS4423000000	23	5	9,5	5	6,3	4	4,8	1,6 ÷ 1,8	0,5 ÷ 2	1.000

MATERIAL
PA6.6 (Polyamide)

COLOUR
(NA) Natural

SELF-EXTINGUISHING
UL 94 V-2

OPERATING TEMPERATURE
-35° ÷ 85°

USE
For printed circuits

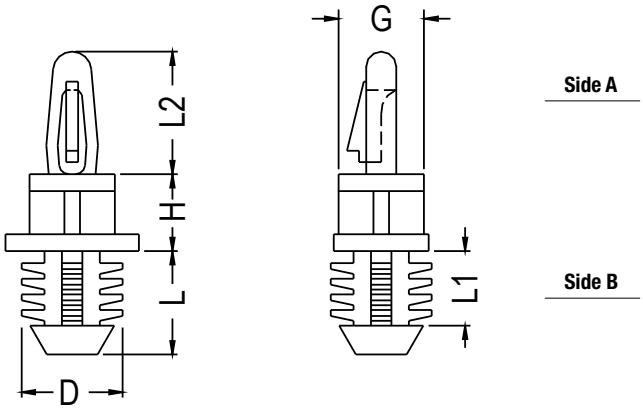

Code (NA)	H	L	L1	L2	D	G	Panel hole Side A	Panel hole Side B	Panel thickness Side A	Panel thickness Side B	Package (pcs)
KGS4604800000	4,8	8,6	6,2	10,2	8,4	7,1	4	7,9	1,2 ÷ 1,7	min 6,4	1.000
KGS4606400000	6,4	8,6	6,2	10,2	8,4	7,1	4	7,9	1,2 ÷ 1,7	min 6,4	1.000
KGS4609500000	9,5	8,6	6,2	10,2	8,4	7,1	4	7,9	1,2 ÷ 1,7	min 6,4	1.000
KGS4611100000	11,1	8,6	6,2	10,2	8,4	7,1	4	7,9	1,2 ÷ 1,7	min 6,4	1.000
KGS4612700000	12,7	8,6	6,2	10,2	8,4	7,1	4	7,9	1,2 ÷ 1,7	min 6,4	1.000
KGS4615900000	15,9	8,6	6,2	10,2	8,4	7,1	4	7,9	1,2 ÷ 1,7	min 6,4	1.000
KGS4619100000	19,1	8,6	6,2	10,2	8,4	7,1	4	7,9	1,2 ÷ 1,7	min 6,4	1.000
KGS4622200000	22,2	8,6	6,2	10,2	8,4	7,1	4	7,9	1,2 ÷ 1,7	min 6,4	1.000
KGS4625400000	25,4	8,6	6,2	10,2	8,4	7,1	4	7,9	1,2 ÷ 1,7	min 6,4	1.000

10 SPRINGS

Composite plastic springs
page 10.1

Micro coil compression springs
page 10.3

Compression springs
page 10.6

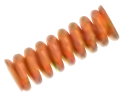

Die springs
page 10.14

Wave springs
page 10.19

Extension springs
page 10.23

Torsion springs
page 10.26

Constant force springs
page 10.28

Battery springs
page 10.30

Continuous length extension springs
page 10.34

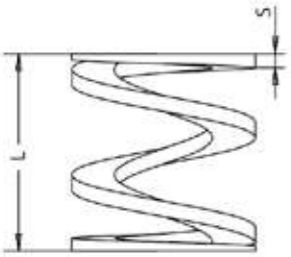

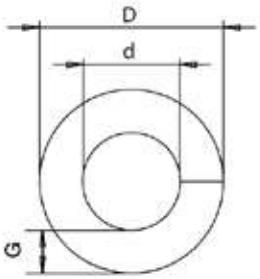

MATERIAL
RU-REI (Ultem polyetherimide resin alloy)

COLOUR
RO Red
AR Orange
GI Yellow
VE Green
VI Purple

NOTES
** Minimum order 5 pcs.

Code	Colour	D	d	S x G	L	Flexural load (N/mm)	Package (pcs) **
LSL038038U000	RO	8,89	4,72	0,76 x 2,08	9,53	0,65	-
LSL038038U10G	AR	8,89	4,72	0,76 x 2,08	9,53	0,98	-
LSL038038U20G	GI	8,89	4,72	0,76 x 2,08	9,53	1,07	-
LSL038038U30G	VE	8,89	4,72	0,76 x 2,08	9,53	1,18	-
LSL038038U40G	VI	8,89	4,72	0,76 x 2,08	9,53	1,33	-
LSL038050U000	RO	8,89	4,72	0,76 x 2,08	12,7	0,46	-
LSL038050U10G	AR	8,89	4,72	0,76 x 2,08	12,7	0,7	-
LSL038050U20G	GI	8,89	4,72	0,76 x 2,08	12,7	0,77	-
LSL038050U30G	VE	8,89	4,72	0,76 x 2,08	12,7	0,85	-
LSL038050U40G	VI	8,89	4,72	0,76 x 2,08	12,7	0,96	-
LSL050050U000	RO	12,32	6,63	1,07 x 2,84	12,7	0,95	-
LSL050050U10G	AR	12,32	6,63	1,07 x 2,84	12,7	1,43	-
LSL050050U20G	GI	12,32	6,63	1,07 x 2,84	12,7	1,56	-
LSL050050U30G	VE	12,32	6,63	1,07 x 2,84	12,7	1,73	-
LSL050050U40G	VI	12,32	6,63	1,07 x 2,84	12,7	1,95	-
LSL050075U000	RO	11,94	6,25	1,07 x 2,84	19,05	0,62	-
LSL050075U10G	AR	11,94	6,25	1,07 x 2,84	19,05	0,94	-
LSL050075U20G	GI	11,94	6,25	1,07 x 2,84	19,05	1,03	-
LSL050075U30G	VE	11,94	6,25	1,07 x 2,84	19,05	1,14	-
LSL050075U40G	VI	11,94	6,25	1,07 x 2,84	19,05	1,28	-
LSL075075U000	RO	18,29	9,55	1,57 x 4,37	19,05	1,43	-
LSL075075U10G	AR	18,29	9,55	1,57 x 4,37	19,05	2,17	-
LSL075075U20G	GI	18,29	9,55	1,57 x 4,37	19,05	2,37	-
LSL075075U30G	VE	18,29	9,55	1,57 x 4,37	19,05	2,62	-
LSL075075U40G	VI	18,29	9,55	1,57 x 4,37	19,05	2,95	-
LSL075100U000	RO	18,29	9,55	1,57 x 4,37	25,4	1,02	-
LSL075100U10G	AR	18,29	9,55	1,57 x 4,37	25,4	1,55	-
LSL075100U20G	GI	18,29	9,55	1,57 x 4,37	25,4	1,69	-
LSL075100U30G	VE	18,29	9,55	1,57 x 4,37	25,4	1,87	-
LSL075100U40G	VI	18,29	9,55	1,57 x 4,37	25,4	2,11	-

MATERIAL
RU-REI (Ultem polyetherimide resin alloy)

COLOUR
RO Red
AR Orange
GI Yellow
VE Green
VI Purple

NOTES
** Minimum order 5 pcs.

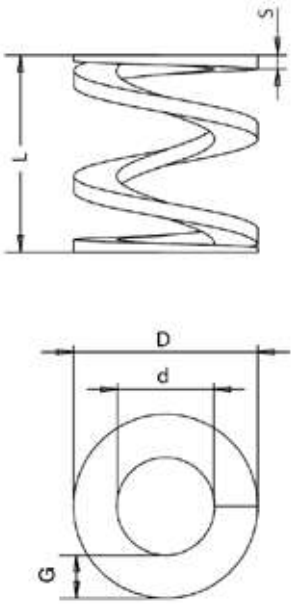

Code	Colour	D	d	S x G	L	Flexural load (N/mm)	Package (pcs) **
LSL100100U000	RO	24,51	12,83	2,16 x 5,84	25,4	2,04	-
LSL100100U10G	AR	24,51	12,83	2,16 x 5,84	25,4	3,08	-
LSL100100U20G	GI	24,51	12,83	2,16 x 5,84	25,4	3,37	-
LSL100100U30G	VE	24,51	12,83	2,16 x 5,84	25,4	3,73	-
LSL100100U40G	VI	24,51	12,83	2,16 x 5,84	25,4	4,2	-
LSL100125U000	RO	24,51	12,83	2,16 x 5,84	31,75	1,57	-
LSL100125U10G	AR	24,51	12,83	2,16 x 5,84	31,75	2,37	-
LSL100125U20G	GI	24,51	12,83	2,16 x 5,84	31,75	2,59	-
LSL100125U30G	VE	24,51	12,83	2,16 x 5,84	31,75	2,87	-
LSL100125U40G	VI	24,51	12,83	2,16 x 5,84	31,75	3,23	-

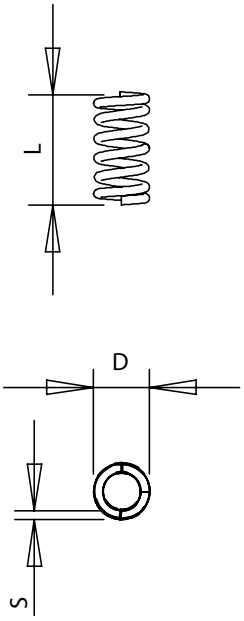

MATERIAL
Elgiloy® (Cobalt chrome nickel molybdenum alloy)

NOTES
** Minimum order 5 pcs.

Code	D	Min. hole Ø	S	Approx. load at solid height (N)	L	Flexural load (N/mm)	Solid height (approx.)	Package (pcs) **
LS0CB0040A01E	0,64	0,81	0,1	0,796	1,27	1,537	0,76	-
LS0CB0040A02E	0,64	0,81	0,1	0,796	1,91	0,927	1,04	-
LS0CB0040A03E	0,64	0,81	0,1	0,796	2,54	0,664	1,35	-
LS0CB0040A04E	0,64	0,81	0,1	0,796	3,18	0,517	1,63	-
LS0CB0040A05E	0,64	0,81	0,1	0,796	3,81	0,423	1,93	-
LS0CB0040A06E	0,64	0,81	0,1	0,796	4,45	0,358	2,24	-
LS0CB0040A07E	0,64	0,81	0,1	0,796	5,08	0,311	2,51	-
LS0CB0040A08E	0,64	0,81	0,1	0,796	5,72	0,274	2,82	-
LS0CB0040A09E	0,64	0,81	0,1	0,796	6,35	0,246	3,1	-
LS0CB0045A01E	0,64	0,81	0,11	1,161	1,27	2,69	0,84	-
LS0CB0045A02E	0,64	0,81	0,11	1,161	1,91	1,597	1,17	-
LS0CB0045A03E	0,64	0,81	0,11	1,161	2,54	1,135	1,52	-
LS0CB0045A04E	0,64	0,81	0,11	1,161	3,18	0,881	1,85	-
LS0CB0045A05E	0,64	0,81	0,11	1,161	3,81	0,719	2,21	-
LS0CB0045A06E	0,64	0,81	0,11	1,161	4,45	0,608	2,54	-
LS0CB0045A07E	0,64	0,81	0,11	1,161	5,08	0,526	2,87	-
LS0CB0045A08E	0,64	0,81	0,11	1,161	5,72	0,464	3,23	-
LS0CB0045A09E	0,64	0,81	0,11	1,161	6,35	0,415	3,56	-
LS0CB0050A01E	0,64	0,81	0,13	1,632	1,27	4,571	0,91	-
LS0CB0050A02E	0,64	0,81	0,13	1,632	1,91	2,667	1,3	-
LS0CB0050A03E	0,64	0,81	0,13	1,632	2,54	1,882	1,68	-
LS0CB0050A04E	0,64	0,81	0,13	1,632	3,18	1,454	2,06	-
LS0CB0050A05E	0,64	0,81	0,13	1,632	3,81	1,185	2,44	-
LS0CB0050A06E	0,64	0,81	0,13	1,632	4,45	1	2,82	-
LS0CB0050A07E	0,64	0,81	0,13	1,632	5,08	0,865	3,2	-
LS0CB0050A08E	0,64	0,81	0,13	1,632	5,72	0,762	3,58	-
LS0CB0050A09E	0,64	0,81	0,13	1,632	6,35	0,681	3,96	-
LS0CB0055A01E	0,64	0,81	0,14	2,229	1,27	7,585	0,97	-
LS0CB0055A02E	0,64	0,81	0,14	2,229	1,91	4,343	1,4	-
LS0CB0055A03E	0,64	0,81	0,14	2,229	2,54	3,043	1,8	-
LS0CB0055A04E	0,64	0,81	0,14	2,229	3,18	2,342	2,24	-
LS0CB0055A05E	0,64	0,81	0,14	2,229	3,81	1,903	2,64	-
LS0CB0055A06E	0,64	0,81	0,14	2,229	4,45	1,603	3,05	-
LS0CB0055A07E	0,64	0,81	0,14	2,229	5,08	1,385	3,48	-
LS0CB0055A08E	0,64	0,81	0,14	2,229	5,72	1,219	3,89	-
LS0CB0055A09E	0,64	0,81	0,14	2,229	6,35	1,088	4,29	-

MATERIAL
Elgiloy® (Cobalt chrome nickel molybdenum alloy)

NOTES
** Minimum order 5 pcs.

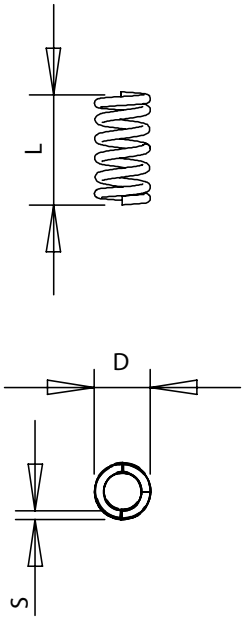

Code	D	Min. hole Ø	S	Approx. load at solid height (N)	L	Flexural load (N/mm)	Solid height (approx.)	Package (pcs) **
LS0CBM010B01E	1,32	1,5	0,1	0,35	2	0,241	0,53	-
LS0CBM010B02E	1,32	1,5	0,1	0,35	3	0,151	0,69	-
LS0CBM010B03E	1,32	1,5	0,1	0,35	4	0,11	0,84	-
LS0CBM010B04E	1,32	1,5	0,1	0,35	5	0,087	0,97	-
LS0CBM010B05E	1,32	1,5	0,1	0,35	6	0,072	1,12	-
LS0CBM010B06E	1,32	1,5	0,1	0,35	7	0,061	1,24	-
LS0CBM010B07E	1,32	1,5	0,1	0,35	8	0,053	1,4	-
LS0CBM010B08E	1,32	1,5	0,1	0,35	9	0,047	1,52	-
LS0CBM010B09E	1,32	1,5	0,1	0,35	10	0,042	1,68	-
LS0CBM011B01E	1,32	1,5	0,11	0,5	2	0,366	0,64	-
LS0CBM011B02E	1,32	1,5	0,11	0,5	3	0,229	0,81	-
LS0CBM011B03E	1,32	1,5	0,11	0,5	4	0,166	0,99	-
LS0CBM011B04E	1,32	1,5	0,11	0,5	5	0,13	1,17	-
LS0CBM011B05E	1,32	1,5	0,11	0,5	6	0,107	1,35	-
LS0CBM011B06E	1,32	1,5	0,11	0,5	7	0,091	1,52	-
LS0CBM011B07E	1,32	1,5	0,11	0,5	8	0,079	1,7	-
LS0CBM011B08E	1,32	1,5	0,11	0,5	9	0,07	1,88	-
LS0CBM011B09E	1,32	1,5	0,11	0,5	10	0,063	2,06	-
LS0CBM013B01E	1,32	1,5	0,13	0,7	2	0,548	0,71	-
LS0CBM013B02E	1,32	1,5	0,13	0,7	3	0,339	0,94	-
LS0CBM013B03E	1,32	1,5	0,13	0,7	4	0,245	1,14	-
LS0CBM013B04E	1,32	1,5	0,13	0,7	5	0,192	1,35	-
LS0CBM013B05E	1,32	1,5	0,13	0,7	6	0,158	1,57	-
LS0CBM013B06E	1,32	1,5	0,13	0,7	7	0,134	1,78	-
LS0CBM013B07E	1,32	1,5	0,13	0,7	8	0,116	1,98	-
LS0CBM013B08E	1,32	1,5	0,13	0,7	9	0,103	2,21	-
LS0CBM013B09E	1,32	1,5	0,13	0,7	10	0,092	2,41	-
LS0CBM014B01E	1,32	1,5	0,14	0,95	2	0,798	0,81	-
LS0CBM014B02E	1,32	1,5	0,14	0,95	3	0,489	1,07	-
LS0CBM014B03E	1,32	1,5	0,14	0,95	4	0,352	1,3	-
LS0CBM014B04E	1,32	1,5	0,14	0,95	5	0,275	1,55	-
LS0CBM014B05E	1,32	1,5	0,14	0,95	6	0,226	1,8	-
LS0CBM014B06E	1,32	1,5	0,14	0,95	7	0,192	2,06	-
LS0CBM014B07E	1,32	1,5	0,14	0,95	8	0,166	2,29	-
LS0CBM014B08E	1,32	1,5	0,14	0,95	9	0,147	2,54	-
LS0CBM014B09E	1,32	1,5	0,14	0,95	10	0,132	2,79	-

MATERIAL
Elgiloy® (Cobalt chrome nickel molybdenum alloy)

NOTES
** Minimum order 5 pcs.

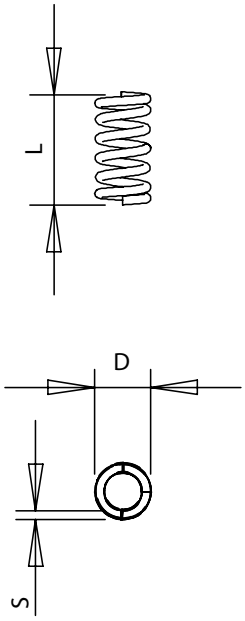

Code	D	Min. hole Ø	S	Approx. load at solid height (N)	L	Flexural load (N/mm)	Solid height (approx.)	Package (pcs) **
LS0CBM010C01E	1,65	1,8	0,1	0,25	3	0,103	0,58	-
LS0CBM010C02E	1,65	1,8	0,1	0,25	4	0,075	0,69	-
LS0CBM010C03E	1,65	1,8	0,1	0,25	5	0,059	0,79	-
LS0CBM010C04E	1,65	1,8	0,1	0,25	6	0,049	0,89	-
LS0CBM010C05E	1,65	1,8	0,1	0,25	7	0,042	0,99	-
LS0CBM010C06E	1,65	1,8	0,1	0,25	8	0,036	1,09	-
LS0CBM010C07E	1,65	1,8	0,1	0,25	9	0,032	1,19	-
LS0CBM010C08E	1,65	1,8	0,1	0,25	10	0,029	1,3	-
LS0CBM010C09E	1,65	1,8	0,1	0,25	12	0,024	1,5	-
LS0CBM011C01E	1,65	1,8	0,11	0,4	3	0,17	0,64	-
LS0CBM011C02E	1,65	1,8	0,11	0,4	4	0,124	0,76	-
LS0CBM011C03E	1,65	1,8	0,11	0,4	5	0,097	0,89	-
LS0CBM011C04E	1,65	1,8	0,11	0,4	6	0,08	0,99	-
LS0CBM011C05E	1,65	1,8	0,11	0,4	7	0,068	1,12	-
LS0CBM011C06E	1,65	1,8	0,11	0,4	8	0,059	1,22	-
LS0CBM011C07E	1,65	1,8	0,11	0,4	9	0,052	1,35	-
LS0CBM011C08E	1,65	1,8	0,11	0,4	10	0,047	1,45	-
LS0CBM011C09E	1,65	1,8	0,11	0,4	12	0,039	1,68	-
LS0CBM013C01E	1,65	1,8	0,13	0,55	3	0,244	0,76	-
LS0CBM013C02E	1,65	1,8	0,13	0,55	4	0,177	0,89	-
LS0CBM013C03E	1,65	1,8	0,13	0,55	5	0,139	1,04	-
LS0CBM013C04E	1,65	1,8	0,13	0,55	6	0,114	1,17	-
LS0CBM013C05E	1,65	1,8	0,13	0,55	7	0,097	1,32	-
LS0CBM013C06E	1,65	1,8	0,13	0,55	8	0,084	1,45	-
LS0CBM013C07E	1,65	1,8	0,13	0,55	9	0,074	1,6	-
LS0CBM013C08E	1,65	1,8	0,13	0,55	10	0,067	1,73	-
LS0CBM013C09E	1,65	1,8	0,13	0,55	12	0,055	2,01	-
LS0CBM014C01E	1,65	1,8	0,14	0,7	3	0,329	0,86	-
LS0CBM014C02E	1,65	1,8	0,14	0,7	4	0,237	1,04	-
LS0CBM014C03E	1,65	1,8	0,14	0,7	5	0,185	1,22	-
LS0CBM014C04E	1,65	1,8	0,14	0,7	6	0,152	1,4	-
LS0CBM014C05E	1,65	1,8	0,14	0,7	7	0,129	1,57	-
LS0CBM014C06E	1,65	1,8	0,14	0,7	8	0,112	1,75	-
LS0CBM014C07E	1,65	1,8	0,14	0,7	9	0,099	1,93	-
LS0CBM014C08E	1,65	1,8	0,14	0,7	10	0,089	2,11	-
LS0CBM014C09E	1,65	1,8	0,14	0,7	12	0,073	2,44	-

MATERIAL
AISI316 (Stainless steel)

SURFACE TREATMENT
Ultrasound passivation

NOTES
End coils closed.
** Minimum order 5 pcs.

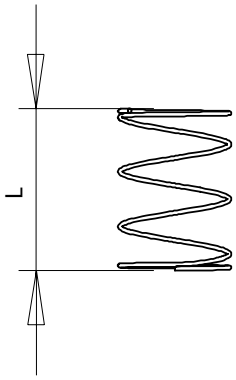

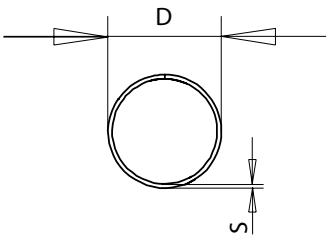

Code	D	S	L	Flexural load (N/mm)	Package (pcs) **
LS0LP010B01S316	6,1	0,25	7,95	0,044	-
LS0LP010B02S316	6,1	0,25	12,7	0,027	-
LS0LP010B03S316	6,1	0,25	15,88	0,021	-
LS0LP010B04S316	6,1	0,25	19,05	0,017	-
LS0LP010B05S316	6,1	0,25	25,40	0,013	-
LS0LP010B06S316	6,1	0,25	31,75	0,01	-
LS0LP014B01S316	6,1	0,36	7,95	0,196	-
LS0LP014B02S316	6,1	0,36	12,7	0,116	-
LS0LP014B03S316	6,1	0,36	15,88	0,091	-
LS0LP014B04S316	6,1	0,36	19,05	0,075	-
LS0LP014B05S316	6,1	0,36	25,4	0,056	-
LS0LP014B06S316	6,1	0,36	31,75	0,044	-
LS0LP029N01S316	18,29	0,74	19,05	0,166	-
LS0LP029N02S316	18,29	0,74	25,4	0,121	-
LS0LP029N03S316	18,29	0,74	31,75	0,095	-
LS0LP029N04S316	18,29	0,74	38,1	0,078	-
LS0LP029N05S316	18,29	0,74	44,45	0,066	-
LS0LP029N06S316	18,29	0,74	50,8	0,058	-
LS0LP042N01S316	18,29	1,07	19,05	0,922	-
LS0LP042N02S316	18,29	1,07	25,4	0,658	-
LS0LP042N03S316	18,29	1,07	31,75	0,512	-
LS0LP042N04S316	18,29	1,07	38,1	0,419	-
LS0LP042N05S316	18,29	1,07	44,45	0,354	-
LS0LP042N06S316	18,29	1,07	50,8	0,307	-
LS0LP045S01S316	27,81	1,14	38,1	0,185	-
LS0LP045S02S316	27,81	1,14	44,45	0,156	-
LS0LP045S03S316	27,81	1,14	50,8	0,135	-
LS0LP045S04S316	27,81	1,14	57,15	0,119	-
LS0LP045S05S316	27,81	1,14	63,5	0,107	-
LS0LP045S06S316	27,81	1,14	69,85	0,096	-

MATERIAL
AISI316 (Stainless steel)

SURFACE TREATMENT
Ultrasound passivation

NOTES
End coils closed.
** Minimum order 5 pcs.

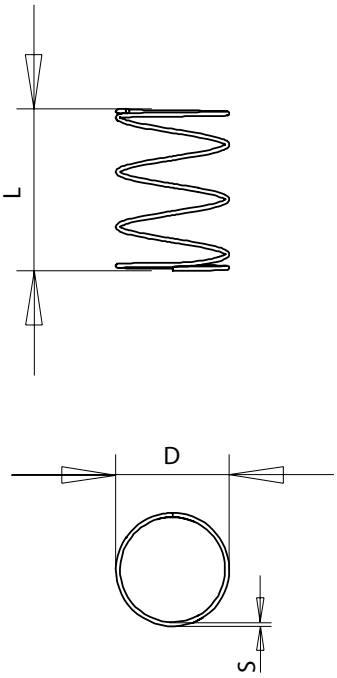

Code	D	S	L	Flexural load (N/mm)	Package (pcs) **
LS0LP063S01S316	27,81	1,59	38,1	0,981	-
LS0LP063S02S316	27,81	1,59	44,45	0,824	-
LS0LP063S03S316	27,81	1,59	50,8	0,71	-
LS0LP063S04S316	27,81	1,59	57,15	0,624	-
LS0LP063S05S316	27,81	1,59	63,5	0,556	-
LS0LP063S06S316	27,81	1,59	69,85	0,502	-
LS0LP080X01S316	40,13	2,03	44,45	1,043	-
LS0LP080X02S316	40,13	2,03	50,8	0,895	-
LS0LP080X03S316	40,13	2,03	57,15	0,783	-
LS0LP080X04S316	40,13	2,03	63,5	0,697	-
LS0LP080X05S316	40,13	2,03	69,85	0,627	-
LS0LP080X06S316	40,13	2,03	76,2	0,571	-
LSLP125ZK01S316	73,03	3,18	50,8	1,151	-
LSLP125ZK02S316	73,03	3,18	63,5	0,879	-
LSLP125ZK03S316	73,03	3,18	76,2	0,711	-
LSLP125ZK04S316	73,03	3,18	101,6	0,515	-
LSLP125ZK05S316	73,03	3,18	127	0,405	-
LSLP125ZK06S316	73,03	3,18	152,4	0,333	-
LSLP218ZK01S316	73,03	5,54	50,8	15,764	-
LSLP218ZK02S316	73,03	5,54	63,5	11,496	-
LSLP218ZK03S316	73,03	5,54	76,2	9,046	-
LSLP218ZK04S316	73,03	5,54	101,6	6,342	-
LSLP218ZK05S316	73,03	5,54	127	4,883	-
LSLP218ZK06S316	73,03	5,54	152,4	3,969	-

MATERIAL - SURFACE TREATMENT
Spring Steel galvanized
AISI302 (Stainless steel) passivated
AISI316 (Stainless steel) passivated

NOTES
End coils closed and ground.
* The flexural load indicated in the table refers to the version in galvanized spring steel.
The load for the versions in AISI302 and AISI316 is 83.3% of that value.
** Minimum order 5 pcs.

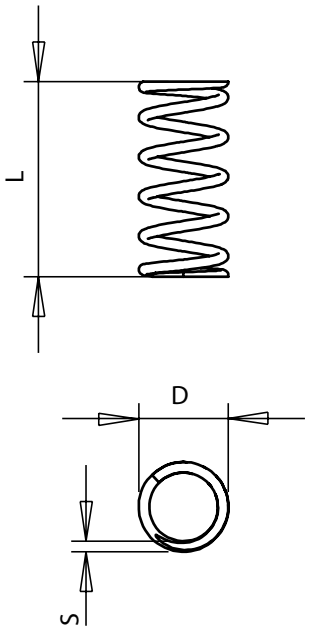

Code spring steel	Code AISI302	Code AISI316	D	S	L	Flexural load (N/mm) *	Package (pcs) **
LS00LC018B01M	**LS00LC018B01S**	**LS0LC018B01S3**	4,57	0,46	6,35	2,36	-
LS00LC018B02M	**LS00LC018B02S**	**LS0LC018B02S3**	4,57	0,46	7,95	1,93	-
LS00LC018B03M	**LS00LC018B03S**	**LS0LC018B03S3**	4,57	0,46	9,53	1,58	-
LS00LC018B04M	**LS00LC018B04S**	**LS0LC018B04S3**	4,57	0,46	11,13	1,4	-
LS00LC018B05M	**LS00LC018B05S**	**LS0LC018B05S3**	4,57	0,46	12,7	1,23	-
LS00LC018B06M	**LS00LC018B06S**	**LS0LC018B06S3**	4,57	0,46	14,3	1,05	-
LS00LC018B07M	**LS00LC018B07S**	**LS0LC018B07S3**	4,57	0,46	15,88	0,88	-
LS00LC018B08M	**LS00LC018B08S**	**LS0LC018B08S3**	4,57	0,46	17,48	0,79	-
LS00LC018B09M	**LS00LC018B09S**	**LS0LC018B09S3**	4,57	0,46	19,05	0,7	-
LS00LC018B10M	**LS00LC018B10S**	**LS0LC018B10S3**	4,57	0,46	22,23	0,63	-
LS00LC018B11M	**LS00LC018B11S**	**LS0LC018B11S3**	4,57	0,46	25,4	0,54	-
LS00LC018B12M	**LS00LC018B12S**	**LS0LC018B12S3**	4,57	0,46	31,75	0,44	-
LS00LC018B13M	**LS00LC018B13S**	**LS0LC018B13S3**	4,57	0,46	34,93	0,4	-
LS00LC018B14M	**LS00LC018B14S**	**LS0LC018B14S3**	4,57	0,46	38,1	0,35	-
LS00LC018B15M	**LS00LC018B15S**	**LS0LC018B15S3**	4,57	0,46	44,45	0,3	-
LS00LC018C01M	**LS00LC018C01S**	**LS0LC018C01S3**	6,1	0,46	6,35	1,65	-
LS00LC018C02M	**LS00LC018C02S**	**LS0LC018C02S3**	6,1	0,46	7,95	1,28	-
LS00LC018C03M	**LS00LC018C03S**	**LS0LC018C03S3**	6,1	0,46	9,53	1,03	-
LS00LC018C04M	**LS00LC018C04S**	**LS0LC018C04S3**	6,1	0,46	11,13	0,88	-
LS00LC018C05M	**LS00LC018C05S**	**LS0LC018C05S3**	6,1	0,46	12,7	0,75	-
LS00LC018C06M	**LS00LC018C06S**	**LS0LC018C06S3**	6,1	0,46	14,3	0,67	-
LS00LC018C07M	**LS00LC018C07S**	**LS0LC018C07S3**	6,1	0,46	15,88	0,6	-
LS00LC018C08M	**LS00LC018C08S**	**LS0LC018C08S3**	6,1	0,46	17,48	0,54	-
LS00LC018C09M	**LS00LC018C09S**	**LS0LC018C09S3**	6,1	0,46	19,05	0,49	-
LS00LC018C10M	**LS00LC018C10S**	**LS0LC018C10S3**	6,1	0,46	20,65	0,46	-
LS00LC018C11M	**LS00LC018C11S**	**LS0LC018C11S3**	6,1	0,46	22,23	0,42	-
LS00LC018C12M	**LS00LC018C12S**	**LS0LC018C12S3**	6,1	0,46	23,83	0,39	-
LS00LC018C13M	**LS00LC018C13S**	**LS0LC018C13S3**	6,1	0,46	25,4	0,37	-
LS00LC018C14M	**LS00LC018C14S**	**LS0LC018C14S3**	6,1	0,46	31,75	0,3	-
LS00LC018C15M	**LS00LC018C15S**	**LS0LC018C15S3**	6,1	0,46	38,1	0,23	-

MATERIAL - SURFACE TREATMENT
Spring Steel galvanized
AISI302 (Stainless steel) passivated
AISI316 (Stainless steel) passivated

NOTES
End coils closed and ground.
* The flexural load indicated in the table refers to the version in galvanized spring steel. The load for the versions in AISI302 and AISI316 is 83.3% of that value.
** Minimum order 5 pcs.

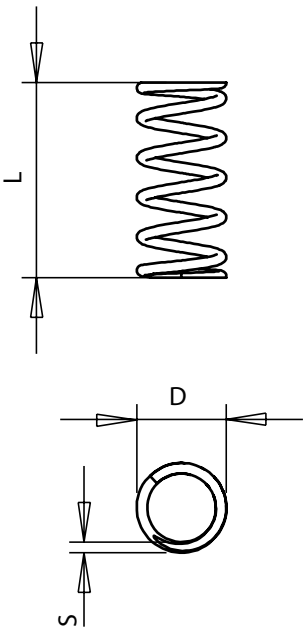

Code spring steel	Code AISI302	Code AISI316	D	S	L	Flexural load (N/mm) *	Package (pcs) **
LS00LC018C16M	LS00LC018C16S	LS0LC018C16S3	6,1	0,46	44,45	0,21	-
LS00LC018C17M	LS00LC018C17S	LS0LC018C17S3	6,1	0,46	50,8	0,18	-
LS00LC042C01M	LS00LC042C01S	LS0LC042C01S3	6,1	1,07	9,53	26,44	-
LS00LC042C02M	LS00LC042C02S	LS0LC042C02S3	6,1	1,07	11,13	21,54	-
LS00LC042C03M	LS00LC042C03S	LS0LC042C03S3	6,1	1,07	12,7	18,56	-
LS00LC042C04M	LS00LC042C04S	LS0LC042C04S3	6,1	1,07	14,3	16,46	-
LS00LC042C05M	LS00LC042C05S	LS0LC042C05S3	6,1	1,07	15,88	14,88	-
LS00LC042C06M	LS00LC042C06S	LS0LC042C06S3	6,1	1,07	17,48	13,13	-
LS00LC042C07M	LS00LC042C07S	LS0LC042C07S3	6,1	1,07	19,05	11,38	-
LS00LC042C08M	LS00LC042C08S	LS0LC042C08S3	6,1	1,07	20,65	10,51	-
LS00LC042C09M	LS00LC042C09S	LS0LC042C09S3	6,1	1,07	22,23	9,81	-
LS00LC042C10M	LS00LC042C10S	LS0LC042C10S3	6,1	1,07	23,83	8,93	-
LS00LC042C11M	LS00LC042C11S	LS0LC042C11S3	6,1	1,07	25,4	8,4	-
LS00LC042C12M	LS00LC042C12S	LS0LC042C12S3	6,1	1,07	28,58	7,35	-
LS00LC042C13M	LS00LC042C13S	LS0LC042C13S3	6,1	1,07	31,75	6,65	-
LS00LC042C14M	LS00LC042C14S	LS0LC042C14S3	6,1	1,07	34,93	5,95	-
LS00LC042C15M	LS00LC042C15S	LS0LC042C15S3	6,1	1,07	38,1	5,43	-
LS00LC042C16M	LS00LC042C16S	LS0LC042C16S3	6,1	1,07	44,45	4,64	-
LS00LC042C17M	LS00LC042C17S	LS0LC042C17S3	6,1	1,07	50,8	4,03	-
LS00LC042C18M	LS00LC042C18S	LS0LC042C18S3	6,1	1,07	57,15	3,59	-
LS00LC042C19M	LS00LC042C19S	LS0LC042C19S3	6,1	1,07	63,5	3,12	-
LS00LC026E01M	LS00LC026E01S	LS0LC026E01S3	9,14	0,66	12,7	1,58	-
LS00LC026E02M	LS00LC026E02S	LS0LC026E02S3	9,14	0,66	14,3	1,4	-
LS00LC026E03M	LS00LC026E03S	LS0LC026E03S3	9,14	0,66	15,88	1,23	-
LS00LC026E04M	LS00LC026E04S	LS0LC026E04S3	9,14	0,66	17,48	1,14	-
LS00LC026E05M	LS00LC026E05S	LS0LC026E05S3	9,14	0,66	19,05	1,05	-
LS00LC026E06M	LS00LC026E06S	LS0LC026E06S3	9,14	0,66	20,65	0,96	-
LS00LC026E07M	LS00LC026E07S	LS0LC026E07S3	9,14	0,66	22,23	0,88	-
LS00LC026E08M	LS00LC026E08S	LS0LC026E08S3	9,14	0,66	23,83	0,79	-
LS00LC026E09M	LS00LC026E09S	LS0LC026E09S3	9,14	0,66	25,4	0,7	-

MATERIAL - SURFACE TREATMENT
Spring Steel galvanized
AISI302 (Stainless steel) passivated
AISI316 (Stainless steel) passivated

NOTES
End coils closed and ground.
* The flexural load indicated in the table refers to the version in galvanized spring steel.
The load for the versions in AISI302 and AISI316 is 83.3% of that value.
** Minimum order 5 pcs.

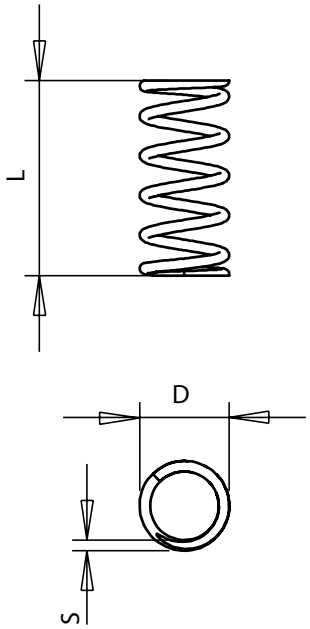

Code spring steel	Code AISI302	Code AISI316	D	S	L	Flexural load (N/mm) *	Package (pcs) **
LS00LC026E10M	**LS00LC026E10S**	**LS0LC026E10S3**	9,14	0,66	28,58	0,61	-
LS00LC026E11M	**LS00LC026E11S**	**LS0LC026E11S3**	9,14	0,66	31,75	0,58	-
LS00LC026E12M	**LS00LC026E12S**	**LS0LC026E12S3**	9,14	0,66	38,1	0,47	-
LS00LC026E13M	**LS00LC026E13S**	**LS0LC026E13S3**	9,14	0,66	44,45	0,42	-
LS00LC026E14M	**LS00LC026E14S**	**LS0LC026E14S3**	9,14	0,66	50,8	0,37	-
LS00LC026E15M	**LS00LC026E15S**	**LS0LC026E15S3**	9,14	0,66	57,15	0,33	-
LS00LC042F01M	**LS00LC042F01S**	**LS0LC042F01S3**	10,67	1,07	12,7	5,95	-
LS00LC042F02M	**LS00LC042F02S**	**LS0LC042F02S3**	10,67	1,07	15,88	4,73	-
LS00LC042F03M	**LS00LC042F03S**	**LS0LC042F03S3**	10,67	1,07	19,05	3,85	-
LS00LC042F04M	**LS00LC042F04S**	**LS0LC042F04S3**	10,67	1,07	22,23	3,24	-
LS00LC042F05M	**LS00LC042F05S**	**LS0LC042F05S3**	10,67	1,07	25,4	2,8	-
LS00LC042F06M	**LS00LC042F06S**	**LS0LC042F06S3**	10,67	1,07	31,75	2,28	-
LS00LC042F07M	**LS00LC042F07S**	**LS0LC042F07S3**	10,67	1,07	38,1	1,84	-
LS00LC042F08M	**LS00LC042F08S**	**LS0LC042F08S3**	10,67	1,07	44,45	1,58	-
LS00LC042F09M	**LS00LC042F09S**	**LS0LC042F09S3**	10,67	1,07	50,8	1,31	-
LS00LC042F10M	**LS00LC042F10S**	**LS0LC042F10S3**	10,67	1,07	57,15	1,17	-
LS00LC042F11M	**LS00LC042F11S**	**LS0LC042F11S3**	10,67	1,07	63,5	1,05	-
LS00LC051F01M	**LS00LC051F01S**	**LS0LC051F01S3**	10,67	1,3	12,7	12,62	-
LS00LC051F02M	**LS00LC051F02S**	**LS0LC051F02S3**	10,67	1,3	15,88	9,61	-
LS00LC051F03M	**LS00LC051F03S**	**LS0LC051F03S3**	10,67	1,3	19,05	7,76	-
LS00LC051F04M	**LS00LC051F04S**	**LS0LC051F04S3**	10,67	1,3	22,23	6,5	-
LS00LC051F05M	**LS00LC051F05S**	**LS0LC051F05S3**	10,67	1,3	25,4	5,6	-
LS00LC051F06M	**LS00LC051F06S**	**LS0LC051F06S3**	10,67	1,3	31,75	4,38	-
LS00LC051F07M	**LS00LC051F07S**	**LS0LC051F07S3**	10,67	1,3	38,1	3,59	-
LS00LC051F08M	**LS00LC051F08S**	**LS0LC051F08S3**	10,67	1,3	44,45	3,05	-
LS00LC051F09M	**LS00LC051F09S**	**LS0LC051F09S3**	10,67	1,3	50,8	2,64	-
LS00LC051F10M	**LS00LC051F10S**	**LS0LC051F10S3**	10,67	1,3	57,15	2,35	-
LS00LC051F11M	**LS00LC051F11S**	**LS0LC051F11S3**	10,67	1,3	63,5	2,1	-
LS00LC042G01M	**LS00LC042G01S**	**LS0LC042G01S3**	12,19	1,07	12,7	4,9	-
LS00LC042G02M	**LS00LC042G02S**	**LS0LC042G02S3**	12,19	1,07	15,88	3,85	-

MATERIAL - SURFACE TREATMENT
Spring Steel galvanized
AISI302 (Stainless steel) passivated
AISI316 (Stainless steel) passivated

NOTES
End coils closed and ground.
* The flexural load indicated in the table refers to the version in galvanized spring steel. The load for the versions in AISI302 and AISI316 is 83.3% of that value.
** Minimum order 5 pcs.

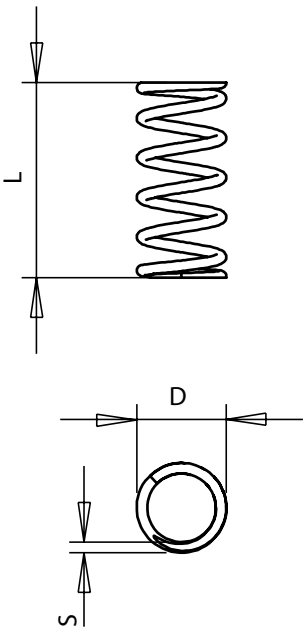

Code spring steel	Code AISI302	Code AISI316	D	S	L	Flexural load (N/mm) *	Package (pcs) **
LS00LC042G03M	LS00LC042G03S	LS0LC042G03S3	12,19	1,07	19,05	3,15	-
LS00LC042G04M	LS00LC042G04S	LS0LC042G04S3	12,19	1,07	22,23	2,63	-
LS00LC042G05M	LS00LC042G05S	LS0LC042G05S3	12,19	1,07	25,4	2,28	-
LS00LC042G06M	LS00LC042G06S	LS0LC042G06S3	12,19	1,07	31,75	1,75	-
LS00LC042G07M	LS00LC042G07S	LS0LC042G07S3	12,19	1,07	38,1	1,49	-
LS00LC042G08M	LS00LC042G08S	LS0LC042G08S3	12,19	1,07	41,28	1,35	-
LS00LC042G09M	LS00LC042G09S	LS0LC042G09S3	12,19	1,07	44,45	1,21	-
LS00LC042G10M	LS00LC042G10S	LS0LC042G10S3	12,19	1,07	50,8	1,05	-
LS00LC042G11M	LS00LC042G11S	LS0LC042G11S3	12,19	1,07	57,15	0,96	-
LS00LC042G12M	LS00LC042G12S	LS0LC042G12S3	12,19	1,07	63,5	0,88	-
LS00LC042G13M	LS00LC042G13S	LS0LC042G13S3	12,19	1,07	69,85	0,79	-
LS00LC042G14M	LS00LC042G14S	LS0LC042G14S3	12,19	1,07	76,2	0,72	-
LS00LC063G01M	LS00LC063G01S	LS0LC063G01S3	12,19	1,6	12,7	21,89	-
LS00LC063G02M	LS00LC063G02S	LS0LC063G02S3	12,19	1,6	15,88	16,63	-
LS00LC063G03M	LS00LC063G03S	LS0LC063G03S3	12,19	1,6	19,05	13,48	-
LS00LC063G04M	LS00LC063G04S	LS0LC063G04S3	12,19	1,6	22,23	11,38	-
LS00LC063G05M	LS00LC063G05S	LS0LC063G05S3	12,19	1,6	25,4	9,98	-
LS00LC063G06M	LS00LC063G06S	LS0LC063G06S3	12,19	1,6	31,75	7,88	-
LS00LC063G07M	LS00LC063G07S	LS0LC063G07S3	12,19	1,6	38,1	6,48	-
LS00LC063G08M	LS00LC063G08S	LS0LC063G08S3	12,19	1,6	41,28	5,95	-
LS00LC063G09M	LS00LC063G09S	LS0LC063G09S3	12,19	1,6	44,45	5,43	-
LS00LC063G10M	LS00LC063G10S	LS0LC063G10S3	12,19	1,6	50,8	4,73	-
LS00LC063G11M	LS00LC063G11S	LS0LC063G11S3	12,19	1,6	57,15	4,2	-
LS00LC063G12M	LS00LC063G12S	LS0LC063G12S3	12,19	1,6	63,5	3,73	
LS00LC063G13M	LS00LC063G13S	LS0LC063G13S3	12,19	1,6	76,2	2,98	-
LS000LC045H0M	LS000LC045H0S	LS00LC045H0S3	15,24	1,14	12,7	3,8	-
LS00LC045H01M	LS00LC045H01S	LS0LC045H01S3	15,24	1,14	15,88	3,15	-
LS00LC045H02M	LS00LC045H02S	LS0LC045H02S3	15,24	1,14	19,05	2,63	-
LS00LC045H03M	LS00LC045H03S	LS0LC045H03S3	15,24	1,14	22,23	2,1	-
LS00LC045H04M	LS00LC045H04S	LS0LC045H04S3	15,24	1,14	25,4	1,84	-

MATERIAL - SURFACE TREATMENT
Spring Steel galvanized
AISI302 (Stainless steel) passivated
AISI316 (Stainless steel) passivated

NOTES
End coils closed and ground.
* The flexural load indicated in the table refers to the version in galvanized spring steel.
The load for the versions in AISI302 and AISI316 is 83.3% of that value.
** Minimum order 5 pcs.

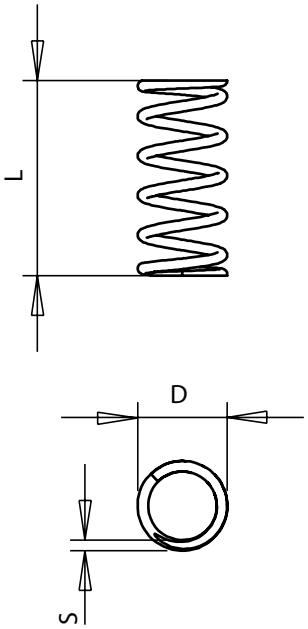

Code spring steel	Code AISI302	Code AISI316	D	S	L	Flexural load (N/mm) *	Package (pcs) **
LS00LC045H05M	**LS00LC045H05S**	**LS0LC045H05S3**	15,24	1,14	31,75	1,4	-
LS00LC045H06M	**LS00LC045H06S**	**LS0LC045H06S3**	15,24	1,14	38,1	1,14	-
LS00LC045H07M	**LS00LC045H07S**	**LS0LC045H07S3**	15,24	1,14	44,45	0,96	-
LS00LC045H08M	**LS00LC045H08S**	**LS0LC045H08S3**	15,24	1,14	50,8	0,84	-
LS00LC045H09M	**LS00LC045H09S**	**LS0LC045H09S3**	15,24	1,14	57,15	0,74	-
LS00LC045H10M	**LS00LC045H10S**	**LS0LC045H10S3**	15,24	1,14	63,5	0,67	-
LS00LC045H11M	**LS00LC045H11S**	**LS0LC045H11S3**	15,24	1,14	69,85	0,6	-
LS00LC045H12M	**LS00LC045H12S**	**LS0LC045H12S3**	15,24	1,14	76,2	0,54	-
LS00LC045H13M	**LS00LC045H13S**	**LS0LC045H13S3**	15,24	1,14	82,55	0,51	-
LS00LC045H14M	**LS00LC045H14S**	**LS0LC045H14S3**	15,24	1,14	88,9	0,47	-
LS00LC080H01M	**LS00LC080H01S**	**LS0LC080H01S3**	15,24	2,03	15,88	33,88	-
LS00LC080H02M	**LS00LC080H02S**	**LS0LC080H02S3**	15,24	2,03	19,05	26,7	-
LS00LC080H03M	**LS00LC080H03S**	**LS0LC080H03S3**	15,24	2,03	22,23	22,03	-
LS00LC080H04M	**LS00LC080H04S**	**LS0LC080H04S3**	15,24	2,03	25,4	18,75	-
LS00LC080H05M	**LS00LC080H05S**	**LS0LC080H05S3**	15,24	2,03	31,75	14,45	-
LS00LC080H06M	**LS00LC080H06S**	**LS0LC080H06S3**	15,24	2,03	38,1	11,75	-
LS00LC080H07M	**LS00LC080H07S**	**LS0LC080H07S3**	15,24	2,03	44,45	9,91	-
LS00LC080H08M	**LS00LC080H08S**	**LS0LC080H08S3**	15,24	2,03	50,8	8,56	-
LS00LC080H09M	**LS00LC080H09S**	**LS0LC080H09S3**	15,24	2,03	57,15	7,55	-
LS00LC080H10M	**LS00LC080H10S**	**LS0LC080H10S3**	15,24	2,03	63,5	6,72	-
LS00LC080H11M	**LS00LC080H11S**	**LS0LC080H11S3**	15,24	2,03	69,85	6,08	-
LS00LC080H12M	**LS00LC080H12S**	**LS0LC080H12S3**	15,24	2,03	76,2	5,55	-
LS00LC080H13M	**LS00LC080H13S**	**LS0LC080H13S3**	15,24	2,03	82,55	5,1	-
LS00LC080H14M	**LS00LC080H14S**	**LS0LC080H14S3**	15,24	2,03	88,9	4,73	-
LS00LC080H15M	**LS00LC080H15S**	**LS0LC080H15S3**	15,24	2,03	95,25	4,4	-
LS00LC080H16M	**LS00LC080H16S**	**LS0LC080H16S3**	15,24	2,03	101,6	4,1	-
LS000LC080J0M	**LS000LC080J0S**	**LS00LC080J0S3**	18,29	2,03	19,05	17,07	-
LS00LC080J01M	**LS00LC080J01S**	**LS0LC080J01S3**	18,29	2,03	22,23	14,06	-
LS00LC080J02M	**LS00LC080J02S**	**LS0LC080J02S3**	18,29	2,03	25,4	11,99	-
LS00LC080J03M	**LS00LC080J03S**	**LS0LC080J03S3**	18,29	2,03	31,75	9,23	-

MATERIAL - SURFACE TREATMENT
Spring Steel galvanized
AISI302 (Stainless steel) passivated
AISI316 (Stainless steel) passivated

NOTES
End coils closed and ground.
* The flexural load indicated in the table refers to the version in galvanized spring steel. The load for the versions in AISI302 and AISI316 is 83.3% of that value.
** Minimum order 5 pcs.

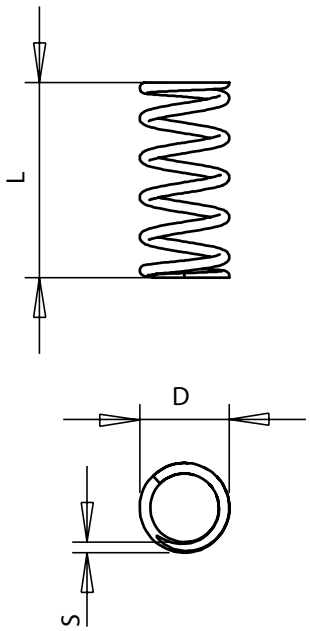

Code spring steel	Code AISI302	Code AISI316	D	S	L	Flexural load (N/mm) *	Package (pcs) **
LS00LC080J04M	**LS00LC080J04S**	**LS0LC080J04S3**	18,29	2,03	38,1	7,51	-
LS00LC080J05M	**LS00LC080J05S**	**LS0LC080J05S3**	18,29	2,03	44,45	6,32	-
LS00LC080J06M	**LS00LC080J06S**	**LS0LC080J06S3**	18,29	2,03	50,8	5,46	-
LS00LC080J07M	**LS00LC080J07S**	**LS0LC080J07S3**	18,29	2,03	57,15	4,82	-
LS00LC080J08M	**LS00LC080J08S**	**LS0LC080J08S3**	18,29	2,03	63,5	4,29	-
LS00LC080J09M	**LS00LC080J09S**	**LS0LC080J09S3**	18,29	2,03	69,85	3,89	-
LS00LC080J10M	**LS00LC080J10S**	**LS0LC080J10S3**	18,29	2,03	76,2	3,54	-
LS00LC080J11M	**LS00LC080J11S**	**LS0LC080J11S3**	18,29	2,03	88,9	2,98	-
LS00LC080J12M	**LS00LC080J12S**	**LS0LC080J12S3**	18,29	2,03	101,6	2,59	-
LS000LC095J0M	**LS000LC095J0S**	**LS00LC095J0S3**	18,29	2,41	19,05	38,17	-
LS00LC095J01M	**LS00LC095J01S**	**LS0LC095J01S3**	18,29	2,41	22,23	31,26	-
LS00LC095J02M	**LS00LC095J02S**	**LS0LC095J02S3**	18,29	2,41	25,4	26,42	-
LS00LC095J03M	**LS00LC095J03S**	**LS0LC095J03S3**	18,29	2,41	31,75	20,19	-
LS00LC095J04M	**LS00LC095J04S**	**LS0LC095J04S3**	18,29	2,41	38,1	16,35	-
LS00LC095J05M	**LS00LC095J05S**	**LS0LC095J05S3**	18,29	2,41	44,45	13,73	-
LS00LC095J06M	**LS00LC095J06S**	**LS0LC095J06S3**	18,29	2,41	50,8	11,84	-
LS00LC095J07M	**LS00LC095J07S**	**LS0LC095J07S3**	18,29	2,41	57,15	10,4	-
LS00LC095J08M	**LS00LC095J08S**	**LS0LC095J08S3**	18,29	2,41	63,5	9,26	-
LS00LC095J09M	**LS00LC095J09S**	**LS0LC095J09S3**	18,29	2,41	69,85	8,37	-
LS00LC095J10M	**LS00LC095J10S**	**LS0LC095J10S3**	18,29	2,41	76,2	7,62	-
LS00LC095J11M	**LS00LC095J11S**	**LS0LC095J11S3**	18,29	2,41	88,9	6,48	-
LS00LC095J12M	**LS00LC095J12S**	**LS0LC095J12S3**	18,29	2,41	101,6	5,62	-

MATERIAL
Spring Steel
CR-SI (Chromium silicon alloy)

SURFACE TREATMENT
Polyester powder coating

COLOUR
GR Grey

NOTES
Ideal operating range from 25% to 35% of the free length.
End coils closed and ground.
** Minimum order 5 pcs.

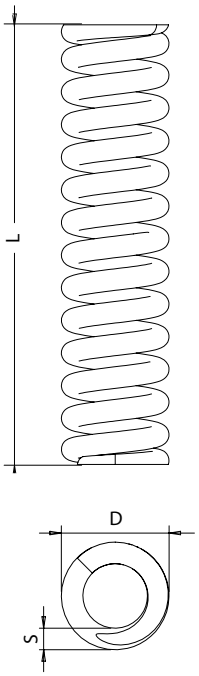

Code spring steel	Code CR-SI	Min. hole Ø	Max. rod Ø	D	S	L	Flexural load (N/mm)	Load at 50% deflection (N)	Solid height	Coils	Package (pcs) **
LS00LHL500A01	-	12,7	7,14	12,19	1,78	25,4	17,51	222	12,5	7,2	-
LS00LHL500A02	-	12,7	7,14	11,96	1,83	31,75	16,11	256	15,8	8,9	-
LS00LHL500A03	-	12,7	7,14	11,81	1,83	38,1	13,31	254	19,1	10,7	-
LS00LHL500A04	-	12,7	7,14	11,58	1,83	44,45	11,91	265	22,1	12,5	-
LS00LHL500A05	-	12,7	7,14	12,01	1,91	50,8	11,21	285	25,4	13,8	-
LS00LHL500A06	-	12,7	7,14	11,86	1,91	63,5	9,11	289	31,5	17,2	-
LS00LHL500A07	-	12,7	7,14	12,07	1,91	76,2	7,01	267	37,9	20,5	-
LS00LHL500A08	-	12,7	7,14	11,84	1,83	88,9	5,25	234	42,4	24	-
LS00LHL500A8A	-	12,7	7,14	12,07	1,83	101,6	4,82	245	48,3	24,4	-
LS00LHL500A09	-	12,7	7,14	12,14	1,91	114,3	4,38	250	56,9	31	-
LS00LHL500A9A	-	12,7	7,14	12,07	1,83	127	3,85	245	59,4	30	-
LS00LHL500A10	-	12,7	7,14	12,01	1,91	139,7	3,68	234	76,2	37,9	-
LS0LHL500A10A	-	12,7	7,14	12,07	1,83	152,4	3,15	240	71,6	36,2	-
LS00LHL500A11	-	12,7	7,14	11,63	1,83	165,1	2,8	231	80,8	45,8	-
LS0LHL500A11A	-	12,7	7,14	12,12	1,83	177,8	2,63	234	84,3	42,5	-
LS00LHL500A12	-	12,7	7,14	11,84	1,78	190,5	1,93	184	93,5	54,7	-
LS0LHL500A12A	-	12,7	7,14	11,94	1,7	203,2	1,75	178	94	48,2	-
-	**LS0LHL1250A01**	31,75	15,88	30,48	3,96	38,1	47,29	901	19,1	4,8	-
-	**LS0LHL1250A02**	31,75	15,88	30,48	3,96	44,45	38,53	856	21,6	5,4	-
-	**LS0LHL1250A03**	31,75	15,88	30,48	3,96	50,8	33,28	845	23,9	5,9	-
-	**LS0LHL1250A04**	31,75	15,88	30,48	4,11	63,5	29,77	945	30	7,2	-
-	**LS0LHL1250A05**	31,75	15,88	30,86	4,32	76,2	27,5	1,051	37,6	8,7	-
-	**LS0LHL1250A06**	31,75	15,88	30,48	4,32	88,9	24,52	1,09	42,9	9,9	-
-	**LS0LHL1250A07**	31,75	15,88	30,48	4,32	101,6	21,02	1,068	48,5	11,2	-
-	**LS0LHL1250A08**	31,75	15,88	29,97	4,32	114,3	19,26	1,101	54,6	12,6	-
-	**LS0LHL1250A09**	31,75	15,88	29,72	4,32	127	17,51	1,112	60,7	14	-
-	**LS0LHL1250A10**	31,75	15,88	29,72	4,32	139,7	15,76	1,101	66,6	15,3	-
-	**LS0LHL1250A11**	31,75	15,88	29,72	4,32	152,4	14,36	1,094	71,9	16,6	-
-	**LS0LHL1250A12**	31,75	15,88	29,72	4,32	177,8	12,22	1,087	82,9	19,2	-
-	**LS0LHL1250A13**	31,75	15,88	29,97	4,50	203,2	13,13	1,334	96	20,6	-

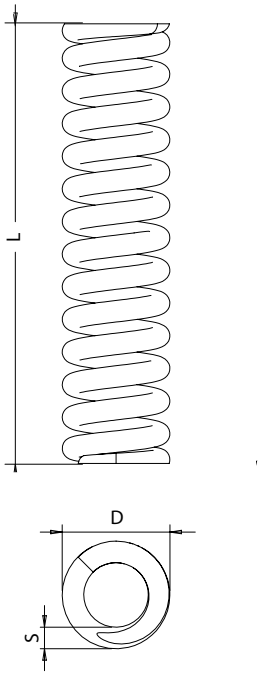

MATERIAL
Spring Steel
CR-SI (Chromium silicon alloy)

SURFACE TREATMENT
Polyester powder coating

COLOUR
BE Beige

NOTES
Ideal operating range from 25% to 35% of the free length.
End coils closed and ground.
** Minimum order 5 pcs.

Code spring steel	Code CR-SI	Min. hole Ø	Max. rod Ø	D	S	L	Flexural load (N/mm)	Load at 50% deflection (N)	Solid height	Coils	Package (pcs) **
LS0LHL500AB01	-	12,7	7,14	12,07	1,91	25,4	23,47	221	14,7	7,5	-
LS0LHL500AB02	-	12,7	7,14	12,07	1,91	31,75	18,91	222	17,5	8,9	-
LS0LHL500AB03	-	12,7	7,14	12,07	1,98	38,1	17,16	242	22,6	11,1	-
LS0LHL500AB04	-	12,7	7,14	12,07	1,98	44,45	15,06	248	25,4	12,3	-
LS0LHL500AB05	-	12,7	7,14	12,07	1,98	50,8	13,31	250	27,9	13,7	-
LS0LHL500AB06	-	12,7	7,14	12,07	1,98	63,5	10,51	247	34,3	16,8	-
LS0LHL500AB07	-	12,7	7,14	12,07	1,98	76,2	8,41	237	41,9	20,5	-
LS0LHL500AB08	-	12,7	7,14	12,07	1,98	88,9	6,66	219	52,3	25,4	-
LS0LHL500AB09	-	12,7	7,14	12,07	1,98	152,4	3,5	198	94,7	46,4	-
-	**LSLHL1250AB01**	31,75	15,88	30,48	4,5	38,1	81,96	1,155	23,6	4,8	-
-	**LSLHL1250AB02**	31,75	15,88	30,23	4,5	44,45	70,75	1,164	26,4	5,4	-
-	**LSLHL1250AB03**	31,75	15,88	29,72	4,5	50,8	62,87	1,182	30	6	-
-	**LSLHL1250AB04**	31,75	15,88	29,97	4,75	63,5	55,69	1,309	37,3	7,7	-
-	**LSLHL1250AB05**	31,75	15,88	29,72	4,88	76,2	50,26	1,417	46,5	9,3	-
-	**LSLHL1250AB06**	31,75	15,88	29,72	4,88	88,9	43,26	1,423	52,6	10,5	-
-	**LSLHL1250AB07**	31,75	15,88	29,72	4,88	101,6	37,83	1,422	58,7	11,7	-
-	**LSLHL1250AB08**	31,75	15,88	29,46	4,88	114,3	33,98	1,437	65,5	13,1	-
-	**LSLHL1250AB09**	31,75	15,88	29,21	4,88	127	30,82	1,448	73,7	14,6	-
-	**LSLHL1250AB10**	31,75	15,88	29,46	4,88	139,7	27,5	1,421	79	15,7	-
-	**LSLHL1250AB11**	31,75	15,88	29,46	4,88	152,4	25,22	1,422	85,1	17	-

MATERIAL
Spring Steel
CR-SI (Chromium silicon alloy)

SURFACE TREATMENT
Polyester powder coating

COLOUR
VI Purple

NOTES
Ideal operating range from 20% to 25% of the free length.
End coils closed and ground.
** Minimum order 5 pcs.

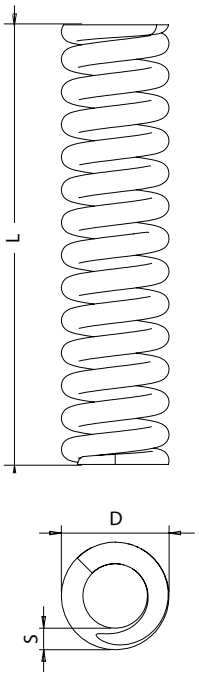

Code spring steel	Code CR-SI	Min. hole Ø	Max. rod Ø	D	S	L	Flexural load (N/mm)	Load at 50% deflection (N)	Solid height	Coils	Package (pcs) **
LS00LHL500B01	-	12,7	7,14	11,71	1,98	25,4	29,42	277	15,5	7,9	-
LS00LHL500B02	-	12,7	7,14	11,84	2,03	31,75	24,34	286	19,6	9,7	-
LS00LHL500B03	-	12,7	7,14	11,56	2,03	38,1	21,02	296	23,4	11,7	-
LS00LHL500B04	-	12,7	7,14	11,68	2,03	44,45	18,21	299	25,7	12,8	-
LS00LHL500B05	-	12,7	7,14	11,71	2,03	50,8	15,24	286	29,7	14,8	-
LS00LHL500B06	-	12,7	7,14	11,71	2,03	63,5	11,91	280	36,8	18,3	-
LS00LHL500B07	-	12,7	7,14	11,71	2,03	76,2	9,98	282	42,9	21,5	-
LS00LHL500B08	-	12,7	7,14	11,71	2,03	88,9	8,23	271	51,3	25,6	-
LS00LHL500B8A	-	12,7	7,14	11,71	2,03	101,6	7,53	283	60,5	27,8	-
LS00LHL500B8B	-	12,7	7,14	11,71	2,03	127	5,95	280	75,4	34,7	-
LS00LHL500B09	-	12,7	7,14	11,71	2,03	152,4	4,73	266	86,4	43,1	-
LS00LHL500B10	-	12,7	7,14	11,71	2,03	177,8	4,38	288	104,1	46,4	-
LS00LHL500B11	-	12,7	7,14	11,71	2,03	203,2	3,85	290	115,3	52,5	-
-	**LS0LHL1250B01**	31,75	15,88	30,48	4,95	38,1	126,97	1,79	24	4,8	-
-	**LS0LHL1250B02**	31,75	15,88	30,23	4,95	44,45	105,08	1,728	27,4	5,5	-
-	**LS0LHL1250B03**	31,75	15,88	29,46	4,95	50,8	94,57	1,778	31,4	6,3	-
-	**LS0LHL1250B04**	31,75	15,88	30,35	5,26	63,5	87,57	2,057	39,5	7,5	-
-	**LS0LHL1250B05**	31,75	15,88	29,59	5,26	76,2	75,31	2,123	47,4	9	-
-	**LS0LHL1250B06**	31,75	15,88	29,46	5,26	88,9	63,92	2,104	54,6	10,4	-
-	**LS0LHL1250B07**	31,75	15,88	29,46	5,26	101,6	55,17	2,074	61,6	11,7	-
-	**LS0LHL1250B08**	31,75	15,88	29,08	5,26	114,3	49,91	2,111	69,9	13,2	-
-	**LS0LHL1250B09**	31,75	15,88	28,96	5,26	127	44,66	2,099	77,9	14,7	-
-	**LS0LHL1250B10**	31,75	15,88	29,21	5,26	139,7	39,4	2,037	84,3	16	-
-	**LS0LHL1250B11**	31,75	15,88	29,21	5,26	152,4	35,9	2,024	91,6	17,4	-
-	**LS0LHL1250B12**	31,75	15,88	29,21	5,26	177,8	30,47	2,005	105,6	20,1	-
-	**LS0LHL1250B13**	31,75	15,88	30,23	5,54	203,2	32,22	2,423	121,4	21,2	-
LS00LHL500C8B	-	12,7	7,14	12,12	2,21	127	8,23	314	78,7	32,8	-

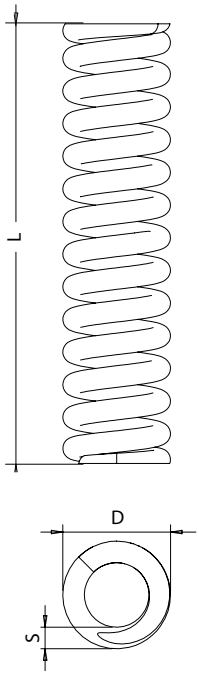

MATERIAL
Spring Steel
CR-SI (Chromium silicon alloy)

SURFACE TREATMENT
Polyester powder coating

COLOUR
NE Black

NOTES
Ideal operating range from 15% to 20% of the free length.
End coils closed and ground.
** Minimum order 5 pcs.

Code spring steel	Code CR-SI	Min. hole Ø	Max. rod Ø	D	S	L	Flexural load (N/mm)	Load at 50% deflection (N)	Solid height	Coils	Package (pcs) **
LS00LHL500C01	-	12,7	7,14	12,07	2,16	25,4	41,33	315	16,3	7,6	-
LS00LHL500C02	-	12,7	7,14	12,07	2,16	31,75	32,57	310	19,6	9,1	-
LS00LHL500C03	-	12,7	7,14	12,12	2,21	38,1	28,72	328	23,9	10,8	-
LS00LHL500C04	-	12,7	7,14	12,12	2,21	44,45	24,17	322	27,4	12,5	-
LS00LHL500C05	-	12,7	7,14	12,07	2,16	50,8	19,26	294	34,3	14	-
LS00LHL500C06	-	12,7	7,14	12,07	2,16	63,5	14,71	280	37,8	17,7	-
LS00LHL500C07	-	12,7	7,14	12,12	2,21	76,2	12,96	296	47,2	21,6	-
LS00LHL500C08	-	12,7	7,14	12,12	2,21	88,9	11,21	299	53,6	24,6	-
LS00LHL500C8A	-	12,7	7,14	12,12	2,21	101,6	10,51	320	64,5	26,1	-
LS00LHL500C09	-	12,7	7,14	12,12	2,21	152,4	6,48	296	89,7	41,2	-
LS00LHL500C10	-	12,7	7,14	12,12	2,21	177,8	5,95	318	107,7	44,6	-
LS00LHL500C11	-	12,7	7,14	12,12	2,21	203,2	5,08	310	132,1	52	-
-	**LS0LHL1250C01**	31,75	15,88	30,23	5,72	38,1	236,43	2,702	26,7	5	-
-	**LS0LHL1250C02**	31,75	15,88	30,23	5,72	44,45	192,65	2,569	30,2	5,7	-
-	**LS0LHL1250C03**	31,75	15,88	30,23	5,72	50,8	175,13	2,669	35,1	6,1	-
-	**LS0LHL1250C04**	31,75	15,88	30,23	5,94	63,5	159,37	3,036	44,2	7,4	-
-	**LS0LHL1250C05**	31,75	15,88	29,97	5,94	76,2	131,35	3,003	52,3	8,8	-
-	**LS0LHL1250C06**	31,75	15,88	30,48	6,17	88,9	125,22	3,34	62	10	-
-	**LS0LHL1250C07**	31,75	15,88	30,35	6,17	101,6	109,46	3,336	70,1	11,3	-
-	**LS0LHL1250C08**	31,75	15,88	30,35	6,17	114,3	95,45	3,273	78,5	12,7	-
-	**LS0LHL1250C09**	31,75	15,88	30,35	6,17	127	84,06	3,203	87,4	14,1	-
-	**LS0LHL1250C10**	31,75	15,88	30,35	6,17	139,7	75,31	3,156	96	15,5	-
-	**LS0LHL1250C11**	31,75	15,88	30,35	6,17	152,4	68,3	3,123	104,6	16,9	-
-	**LS0LHL1250C12**	31,75	15,88	30,35	6,17	177,8	59,19	3,157	118,4	19,2	-
-	**LS0LHL1250C13**	31,75	15,88	29,46	6,17	203,2	57,44	3,502	137,2	21,8	-

MATERIAL
Spring Steel
CR-SI (Chromium silicon alloy)

SURFACE TREATMENT
Polyester powder coating

COLOUR
AR Orange

NOTES
Ideal operating range from 10% to 15% of the free length.
End coils closed and ground.
** Minimum order 5 pcs.

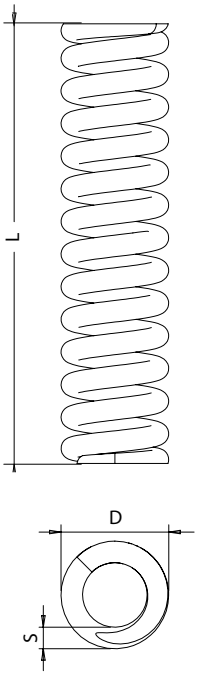

Code spring steel	Code CR-SI	Min. hole Ø	Max. rod Ø	D	S	L	Flexural load (N/mm)	Load at 50% deflection (N)	Solid height	Coils	Package (pcs) **
LS00LHL500D01	-	12,7	7,14	12,19	2,34	25,4	56,04	356	17,8	7,8	-
LS00LHL500D02	-	12,7	7,14	12,19	2,34	31,75	42,03	334	22,1	9,7	-
LS00LHL500D03	-	12,7	7,14	12,19	2,34	38,1	35,03	334	25,4	11,2	-
LS00LHL500D04	-	12,7	7,14	12,19	2,34	44,45	29,77	331	29,2	12,8	-
LS00LHL500D05	-	12,7	7,14	12,19	2,34	50,8	24,52	311	34,3	15,1	-
LS00LHL500D06	-	12,7	7,14	12,19	2,34	63,5	20,14	320	40,9	18	-
LS00LHL500D07	-	12,7	7,14	12,19	2,34	76,2	15,76	300	50,8	22,4	-
LS00LHL500D08	-	12,7	7,14	12,19	2,34	88,9	14,01	311	56,4	25	-
LS00LHL500D8A	-	12,7	7,14	12,19	2,34	101,6	13,31	338	64,5	25,6	-
LS00LHL500D09	-	12,7	7,14	12,19	2,34	152,4	7,88	300	96,5	42,9	-
LS00LHL500D10	-	12,7	7,14	12,19	2,34	177,8	7,36	327	114,8	44,7	-
LS00LHL500D11	-	12,7	7,14	12,19	2,34	203,2	6,48	329	132,1	50,5	-
-	**LS0LHL1250D01**	31,75	15,88	30,61	6,35	50,8	284,59	3,614	38,1	6	-
-	**LS0LHL1250D02**	31,75	15,88	30,61	6,35	63,5	211,91	3,364	46,7	7,3	-
-	**LS0LHL1250D03**	31,75	15,88	30,99	6,65	76,2	207,36	3,95	56,9	8,5	-
-	**LS0LHL1250D04**	31,75	15,88	30,73	6,65	88,9	176,53	3,923	66	9,9	-
-	**LS0LHL1250D05**	31,75	15,88	30,99	6,65	101,6	147,11	3,737	74,7	11,2	-
-	**LS0LHL1250D06**	31,75	15,88	30,35	6,65	114,3	137,3	3,923	84,3	12,6	-
-	**LS0LHL1250D07**	31,75	15,88	30,61	6,65	127	119,09	3,781	92,7	13,9	-
-	**LS0LHL1250D08**	31,75	15,88	30,48	6,65	152,4	98,07	3,737	111,3	16,7	-
-	**LS0LHL1250D09**	31,75	15,88	30,48	6,65	177,8	85,82	3,814	126,5	18,8	-
-	**LS0LHL1250D10**	31,75	15,88	30,48	6,65	203,2	72,68	3,692	144,9	21,8	-

MATERIAL - SURFACE TREATMENT
17-7 PH (Stainless steel) passivated

NOTES
End coils closed.
** Minimum order 5 pcs.

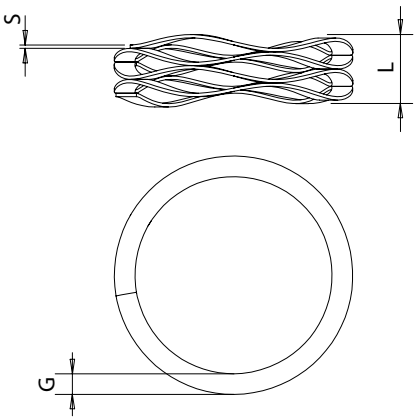

Code	Min. hole Ø	Max. rod Ø	Nominal load (N)	Solid height	L	S x G	Turns	Waves per turn	Flexural load per unit (N/mm)	Package (pcs) **
LSLWM060060152S	6	4	6	0,61	1,52	0,13 x 0,51	3	2,5	6,56	-
LSLWM060060203S	6	4	6	0,81	2,03	0,13 x 0,51	4	2,5	4,92	-
LSLWM060060254S	6	4	6	1,02	2,54	0,13 x 0,51	5	2,5	3,94	-
LSLWM060060305S	6	4	6	1,22	3,05	0,13 x 0,51	6	2,5	3,28	-
LSLWM060060356S	6	4	6	1,42	3,56	0,13 x 0,51	7	2,5	2,81	-
LSLWM060060406S	6	4	6	1,63	4,06	0,13 x 0,51	8	2,5	2,46	-
LSLWM060060457S	6	4	6	1,83	4,57	0,13 x 0,51	9	2,5	2,19	-
LSLWM060060559S	6	4	6	2,24	5,59	0,13 x 0,51	11	2,5	1,79	-
LSLWM060060660S	6	4	6	2,64	6,6	0,13 x 0,51	13	2,5	1,51	-
LSLWM060120152S	6	4	12	0,74	1,52	0,15 x 0,61	3	2,5	15,24	-
LSLWM060120203S	6	4	12	0,97	2,03	0,15 x 0,61	4	2,5	11,25	-
LSLWM060120254S	6	4	12	1,22	2,54	0,15 x 0,61	5	2,5	9,09	-
LSLWM060120305S	6	4	12	1,47	3,05	0,15 x 0,61	6	2,5	7,62	-
LSLWM060120356S	6	4	12	1,7	3,56	0,15 x 0,61	7	2,5	6,47	-
LSLWM060120406S	6	4	12	1,96	4,06	0,15 x 0,61	8	2,5	5,69	-
LSLWM060120457S	6	4	12	2,18	4,57	0,15 x 0,61	9	2,5	5,03	-
LSLWM060120559S	6	4	12	2,69	5,59	0,15 x 0,61	11	2,5	4,14	-
LSLWM060120660S	6	4	12	3,18	6,6	0,15 x 0,61	13	2,5	3,5	-
LSLWM120200434S	12	9	20	1,47	4,34	0,20 x 1,02	3	2,5	6,97	-
LSLWM120200579S	12	9	20	1,98	5,79	0,20 x 1,02	4	2,5	5,25	-
LSLWM120200724S	12	9	20	2,46	7,24	0,20 x 1,02	5	2,5	4,19	-
LSLWM120200869S	12	9	20	2,95	8,69	0,20 x 1,02	6	2,5	3,48	-
LSLWM120201013S	12	9	20	3,45	10,13	0,20 x 1,02	7	2,5	2,99	-
LSLWM120201158S	12	9	20	3,94	11,58	0,20 x 1,02	8	2,5	2,62	-
LSLWM120201303S	12	9	20	4,45	13,03	0,20 x 1,02	9	2,5	2,33	-
LSLWM120201448S	12	9	20	4,93	14,48	0,20 x 1,02	10	2,5	2,09	-
LSLWM120201593S	12	9	20	5,44	15,93	0,20 x 1,02	11	2,5	1,91	-
LSLWM120400434S	12	8,5	40	2,36	4,34	0,28 x 1,17	3	2,5	20,19	-
LSLWM120400579S	12	8,5	40	3,18	5,79	0,28 x 1,17	4	2,5	15,29	-
LSLWM120400724S	12	8,5	40	3,96	7,24	0,28 x 1,17	5	2,5	12,21	-
LSLWM120400869S	12	8,5	40	4,75	8,69	0,28 x 1,17	6	2,5	10,16	-
LSLWM120401013S	12	8,5	40	5,54	10,13	0,28 x 1,17	7	2,5	8,7	-
LSLWM120401158S	12	8,5	40	6,32	11,58	0,28 x 1,17	8	2,5	7,61	-
LSLWM120401303S	12	8,5	40	7,11	13,03	0,28 x 1,17	9	2,5	6,76	-
LSLWM120401448S	12	8,5	40	7,92	14,48	0,28 x 1,17	10	2,5	6,1	-
LSLWM120401593S	12	8,5	40	8,71	15,93	0,28 x 1,17	11	2,5	5,55	-

MATERIAL - SURFACE TREATMENT
17-7 PH (Stainless steel) passivated

NOTES
End coils closed.
** Minimum order 5 pcs.

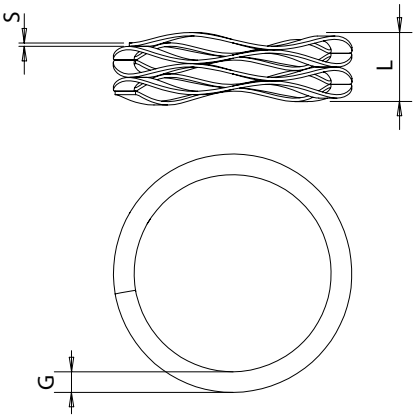

Code	Min. hole Ø	Max. rod Ø	Nominal load (N)	Solid height	L	S x G	Turns	Waves per turn	Flexural load per unit (N/mm)	Package (pcs) **
LSLWM120600434S	12	8,5	60	1,98	4,34	0,3 x 1,14	3	2,5	25,4	-
LSLWM120600579S	12	8,5	60	2,64	5,79	0,3 x 1,14	4	2,5	19,05	-
LSLWM120600724S	12	8,5	60	3,3	7,24	0,3 x 1,14	5	2,5	15,24	-
LSLWM120600869S	12	8,5	60	3,99	8,69	0,3 x 1,14	6	2,5	12,77	-
LSLWM120601013S	12	8,5	60	4,65	10,13	0,3 x 1,14	7	2,5	10,94	-
LSLWM120601158S	12	8,5	60	5,31	11,58	0,3 x 1,14	8	2,5	9,56	-
LSLWM120601303S	12	8,5	60	5,97	13,03	0,3 x 1,14	9	2,5	8,5	-
LSLWM120601448S	12	8,5	60	6,63	14,48	0,3 x 1,14	10	2,5	7,64	-
LSLWM120601593S	12	8,5	60	7,29	15,93	0,3 x 1,14	11	2,5	6,95	-
LSLWM180300572S	18	13	30	3,63	5,72	0,2 x 1,8	3	3,5	14,4	-
LSLWM180300762S	18	13	30	4,75	7,62	0,2 x 1,8	4	3,5	10,45	-
LSLWM180300953S	18	13	30	5,94	9,53	0,2 x 1,8	5	3,5	8,38	-
LSLWM180301143S	18	13	30	7,14	11,43	0,2 x 1,8	6	3,5	6,99	-
LSLWM180301334S	18	13	30	8,31	13,34	0,2 x 1,8	7	3,5	5,97	-
LSLWM180301715S	18	13	30	10,69	17,15	0,2 x 1,8	9	3,5	4,65	-
LSLWM180302286S	18	13	30	14,25	22,86	0,2 x 1,8	12	3,5	3,48	-
LSLWM180550572S	18	13	55	3,68	5,72	0,25 x 1,83	3	3,5	27,07	-
LSLWM180550762S	18	13	55	4,98	7,62	0,25 x 1,83	4	3,5	20,82	-
LSLWM180550953S	18	13	55	6,22	9,53	0,25 x 1,83	5	3,5	16,66	-
LSLWM180551143S	18	13	55	7,47	11,43	0,25 x 1,83	6	3,5	13,88	-
LSLWM180551334S	18	13	55	8,74	13,34	0,25 x 1,83	7	3,5	11,96	-
LSLWM180551715S	18	13	55	11,23	17,15	0,25 x 1,83	9	3,5	9,29	-
LSLWM180552286S	18	13	55	14,96	22,86	0,25 x 1,83	12	3,5	6,96	-
LSLWM1809000572S	18	13	90	3,84	5,72	0,3 x 1,83	3	3,5	47,88	-
LSLWM1809000762S	18	13	90	5,13	7,62	0,3 x 1,83	4	3,5	36,16	-
LSLWM1809000953S	18	13	90	6,4	9,53	0,3 x 1,83	5	3,5	28,81	-
LSLWM1809001143S	18	13	90	7,7	11,43	0,3 x 1,83	6	3,5	24,1	-
LSLWM1809001334S	18	13	90	8,97	13,34	0,3 x 1,83	7	3,5	20,6	-
LSLWM1809001715S	18	13	90	11,53	17,15	0,3 x 1,83	9	3,5	16,03	-
LSLWM1809002286S	18	13	90	15,37	22,86	0,3 x 1,83	12	3,5	12,01	-
LSLWM2505000663S	25	19	50	2,06	6,63	0,25 x 2,18	3	3,5	10,94	-
LSLWM2505000884S	25	19	50	2,74	8,84	0,25 x 2,18	4	3,5	8,2	-
LSLWM2505001105S	25	19	50	3,43	11,05	0,25 x 2,18	5	3,5	6,56	-
LSLWM2505001326S	25	19	50	4,11	13,26	0,25 x 2,18	6	3,5	5,47	-
LSLWM2505001547S	25	19	50	4,8	15,47	0,25 x 2,18	7	3,5	4,69	-
LSLWM2505001989S	25	19	50	6,2	19,89	0,25 x 2,18	9	3,5	3,65	-

MATERIAL - SURFACE TREATMENT
17-7 PH (Stainless steel) passivated

NOTES
End coils closed.
** Minimum order 5 pcs.

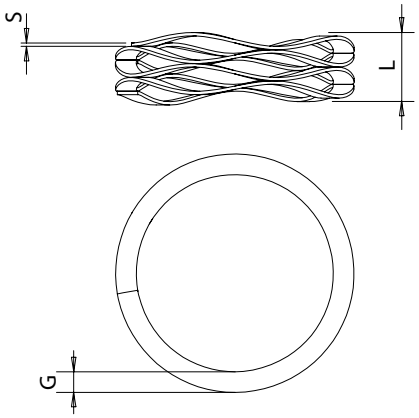

Code	Min. hole Ø	Max. rod Ø	Nominal load (N)	Solid height	L	S x G	Turns	Waves per turn	Flexural load per unit (N/mm)	Package (pcs) **
LSLWM2505026525	25	19	50	8,26	26,52	0,25 x 2,18	12	3,5	2,74	-
LSLWM2508006635	25	19	80	2,95	6,63	0,3 x 2,39	3	3,5	21,72	-
LSLWM2508008845	25	19	80	3,94	8,84	0,3 x 2,39	4	3,5	16,32	-
LSLWM2508011055	25	19	80	4,9	11,05	0,3 x 2,39	5	3,5	13,01	-
LSLWM2508013265	25	19	80	5,89	13,26	0,3 x 2,39	6	3,5	10,86	-
LSLWM2508015475	25	19	80	6,88	15,47	0,3 x 2,39	7	3,5	9,32	-
LSLWM2508019895	25	19	80	8,84	19,89	0,3 x 2,39	9	3,5	7,24	-
LSLWM2508026525	25	19	80	11,79	26,52	0,3 x 2,39	12	3,5	5,43	-
LSLWM2511006635	25	19	110	4,04	6,63	0,38 x 2,39	3	3,5	42,46	-
LSLWM2511008845	25	19	110	5,38	8,84	0,38 x 2,39	4	3,5	31,84	-
LSLWM2511011055	25	19	110	6,73	11,05	0,38 x 2,39	5	3,5	25,47	-
LSLWM2511013265	25	19	110	8,08	13,26	0,38 x 2,39	6	3,5	21,23	-
LSLWM2511015475	25	19	110	9,4	15,47	0,38 x 2,39	7	3,5	18,12	-
LSLWM2511019895	25	19	110	12,12	19,89	0,38 x 2,39	9	3,5	14,15	-
LSLWM2511026525	25	19	110	16,15	26,52	0,38 x 2,39	12	3,5	10,61	-
LSLWM3507008385	35	27	70	3,94	8,38	0,36 x 3,18	3	3,5	15,75	-
LSLWM3507011185	35	27	70	5,23	11,18	0,36 x 3,18	4	3,5	11,78	-
LSLWM3507013975	35	27	70	6,55	13,97	0,36 x 3,18	5	3,5	9,44	-
LSLWM3507016765	35	27	70	7,87	16,76	0,36 x 3,18	6	3,5	7,87	-
LSLWM3507019565	35	27	70	9,17	19,56	0,36 x 3,18	7	3,5	6,74	-
LSLWM3507022355	35	27	70	10,49	22,35	0,36 x 3,18	8	3,5	5,9	-
LSLWM3507025155	35	27	70	11,81	25,15	0,36 x 3,18	9	3,5	5,25	-
LSLWM3507030735	35	27	70	14,43	30,73	0,36 x 3,18	11	3,5	4,29	-
LSLWM3507036325	35	27	70	17,04	36,32	0,36 x 3,18	13	3,5	3,63	-
LSLWM3511008385	35	27	110	4,14	8,38	0,41 x 3,38	3	3,5	25,93	-
LSLWM3511011185	35	27	110	5,51	11,18	0,41 x 3,38	4	3,5	19,42	-
LSLWM3511013975	35	27	110	6,88	13,97	0,41 x 3,38	5	3,5	15,52	-
LSLWM3511016765	35	27	110	8,26	16,76	0,41 x 3,38	6	3,5	12,93	-
LSLWM3511019565	35	27	110	9,63	19,56	0,41 x 3,38	7	3,5	11,08	-
LSLWM3511022355	35	27	110	11,02	22,35	0,41 x 3,38	8	3,5	9,71	-
LSLWM3511025155	35	27	110	12,4	25,15	0,41 x 3,38	9	3,5	8,63	-
LSLWM3511030735	35	27	110	15,14	30,73	0,41 x 3,38	11	3,5	7,05	-
LSLWM3511036325	35	27	110	17,91	36,32	0,41 x 3,38	13	3,5	5,97	-
LSLWM3516008385	35	27	160	4,04	8,38	0,46 x 3,38	3	3,5	36,84	-
LSLWM3516011185	35	27	160	5,38	11,18	0,46 x 3,38	4	3,5	27,63	-
LSLWM3516013975	35	27	160	6,73	13,97	0,46 x 3,38	5	3,5	22,1	-

MATERIAL - SURFACE TREATMENT
17-7 PH (Stainless steel) passivated

NOTES
End coils closed.
** Minimum order 5 pcs.

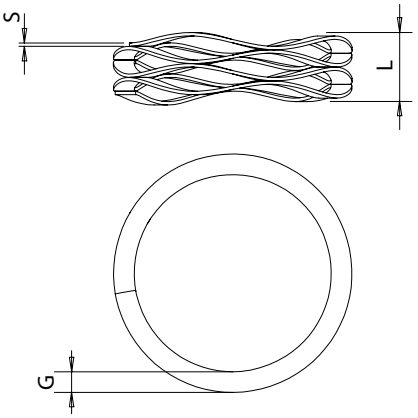

Code	Min. hole Ø	Max. rod Ø	Nominal load (N)	Solid height	L	S x G	Turns	Waves per turn	Flexural load per unit (N/mm)	Package (pcs) **
LSLWM351601676S	35	27	160	8,08	16,76	0,46 x 3,38	6	3,5	18,42	-
LSLWM351601956S	35	27	160	9,42	19,56	0,46 x 3,38	7	3,5	15,79	-
LSLWM351602235S	35	27	160	10,77	22,35	0,46 x 3,38	8	3,5	13,81	-
LSLWM351602515S	35	27	160	12,12	25,15	0,46 x 3,38	9	3,5	12,28	-
LSLWM351603073S	35	27	160	14,81	30,73	0,46 x 3,38	11	3,5	10,05	-
LSLWM351603632S	35	27	160	17,5	36,32	0,46 x 3,38	13	3,5	8,5	-
LSLWM4511100991S	45	35	110	3,38	9,91	0,46 x 3,63	3	3,5	16,85	-
LSLWM4511101321S	45	35	110	4,52	13,21	0,46 x 3,63	4	3,5	12,66	-
LSLWM4511101651S	45	35	110	5,64	16,51	0,46 x 3,63	5	3,5	10,12	-
LSLWM4511101981S	45	35	110	6,76	19,81	0,46 x 3,63	6	3,5	8,43	-
LSLWM4511102311S	45	35	110	7,9	23,11	0,46 x 3,63	7	3,5	7,23	-
LSLWM4511102642S	45	35	110	9,02	26,42	0,46 x 3,63	8	3,5	6,32	-
LSLWM4511102972S	45	35	110	10,16	29,72	0,46 x 3,63	9	3,5	5,62	-
LSLWM4511103632S	45	35	110	12,4	36,32	0,46 x 3,63	11	3,5	4,6	-
LSLWM4511104293S	45	35	110	14,66	42,93	0,46 x 3,63	13	3,5	3,89	-
LSLWM4522250991S	45	35	225	5,33	9,91	0,46 x 3,63	3	4,5	49,21	-
LSLWM4522251321S	45	35	225	6,99	13,21	0,46 x 3,63	4	4,5	36,16	-
LSLWM4522251651S	45	35	225	9,14	16,51	0,46 x 3,63	5	4,5	30,55	-
LSLWM4522251981S	45	35	225	10,8	19,81	0,46 x 3,63	6	4,5	24,95	-
LSLWM4522252311S	45	35	225	12,7	23,11	0,46 x 3,63	7	4,5	21,61	-
LSLWM4522252642S	45	35	225	14,48	26,42	0,46 x 3,63	8	4,5	18,85	-
LSLWM4522252972S	45	35	225	16,26	29,72	0,46 x 3,63	9	4,5	16,71	-
LSLWM4522253632S	45	35	225	19,81	36,32	0,46 x 3,63	11	4,5	13,63	-
LSLWM4522254293S	45	35	225	23,37	42,93	0,46 x 3,63	13	4,5	11,5	-
LSLWM4540000991S	45	35	400	6,43	9,91	0,61 x 3,76	3	4,5	114,95	-
LSLWM4540001321S	45	35	400	8,38	13,21	0,61 x 3,76	4	4,5	82,88	-
LSLWM4540001651S	45	35	400	11,2	16,51	0,61 x 3,76	5	4,5	75,35	-
LSLWM4540001981S	45	35	400	12,95	19,81	0,61 x 3,76	6	4,5	58,33	-
LSLWM4540002311S	45	35	400	15,37	23,11	0,61 x 3,76	7	4,5	51,63	-
LSLWM4540002642S	45	35	400	17,27	26,42	0,61 x 3,76	8	4,5	43,74	-
LSLWM4540002972S	45	35	400	19,69	29,72	0,61 x 3,76	9	4,5	39,87	-
LSLWM4540003632S	45	35	400	24,26	36,32	0,61 x 3,76	11	4,5	33,15	-
LSLWM4540004293S	45	35	400	28,45	42,93	0,61 x 3,76	13	4,5	27,63	-
LS0LW063120780S	45	35	400	11,53	19,81	0,61 x 3,76	13	4,5	6,48	-

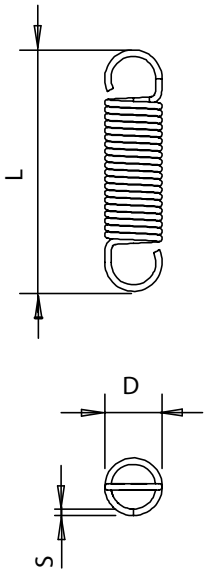

MATERIAL - SURFACE TREATMENT
Spring Steel galvanized
AISI302 (Stainless steel) passivated
AISI316 (Stainless steel) passivated

NOTES
Loops at random position.
* The flexural load indicated in the table refers to the version in galvanized spring steel. The load for the versions in AISI302 and AISI316 is 83.3% of that value.
** Minimum order 5 pcs.

Code spring steel	Code AISI302	Code AISI316	D	S	L	Flexural load (N/mm) *	Package (pcs) **
LS00LE014A01M	LS00LE014A01S	LS0LE014A01S3	3,18	0,36	12,7	0,35	-
LS00LE014A02M	LS00LE014A02S	LS0LE014A02S3	3,18	0,36	14,3	0,289	-
LS00LE014A03M	LS00LE014A03S	LS0LE014A03S3	3,18	0,36	15,88	0,245	-
LS00LE014A04M	LS00LE014A04S	LS0LE014A04S3	3,18	0,36	19,05	0,189	-
LS00LE014A05M	LS00LE014A05S	LS0LE014A05S3	3,18	0,36	20,65	0,17	-
LS00LE014A06M	LS00LE014A06S	LS0LE014A06S3	3,18	0,36	22,23	0,154	-
LS00LE014A07M	LS00LE014A07S	LS0LE014A07S3	3,18	0,36	23,83	0,142	-
LS00LE014A08M	LS00LE014A08S	LS0LE014A08S3	3,18	0,36	25,4	0,131	-
LS00LE014A09M	LS00LE014A09S	LS0LE014A09S3	3,18	0,36	28,58	0,113	-
LS00LE014A10M	LS00LE014A10S	LS0LE014A10S3	3,18	0,36	31,75	0,099	-
LS00LE014A11M	LS00LE014A11S	LS0LE014A11S3	3,18	0,36	34,93	0,088	-
LS00LE014A12M	LS00LE014A12S	LS0LE014A12S3	3,18	0,36	38,1	0,08	-
LS0LEM055C01M	LS0LEM055C01S	-	6,3	0,55	15,5	0,602	-
LS0LEM055C02M	LS0LEM055C02S	-	6,3	0,55	19	0,34	-
LS0LEM055C03M	LS0LEM055C03S	-	6,3	0,55	22	0,247	-
LS0LEM055C04M	LS0LEM055C04S	-	6,3	0,55	25	0,194	-
LS0LEM055C05M	LS0LEM055C05S	-	6,3	0,55	30	0,144	-
LS0LEM055C06M	LS0LEM055C06S	-	6,3	0,55	35	0,114	-
LS0LEM055C07M	LS0LEM055C07S	-	6,3	0,55	40	0,095	-
LS0LEM055C08M	LS0LEM055C08S	-	6,3	0,55	45	0,081	-
LS0LEM055C09M	LS0LEM055C09S	-	6,3	0,55	50	0,07	-
LS0LEM055C10M	LS0LEM055C10S	-	6,3	0,55	55	0,061	-
LS0LEM055C11M	LS0LEM055C11S	-	6,3	0,55	60	0,056	-
LS0LEM055C12M	LS0LEM055C12S	-	6,3	0,55	65	0,051	-
LS0LEM080C01M	LS0LEM080C01S	-	6,3	0,8	15,5	3,842	-
LS0LEM080C02M	LS0LEM080C02S	-	6,3	0,8	19	2,314	-
LS0LEM080C03M	LS0LEM080C03S	-	6,3	0,8	22	1,725	-
LS0LEM080C04M	LS0LEM080C04S	-	6,3	0,8	25	1,377	-
LS0LEM080C05M	LS0LEM080C05S	-	6,3	0,8	30	1,028	-
LS0LEM080C06M	LS0LEM080C06S	-	6,3	0,8	35	0,821	-
LS0LEM080C07M	LS0LEM080C07S	-	6,3	0,8	40	0,683	-
LS0LEM080C08M	LS0LEM080C08S	-	6,3	0,8	45	0,585	-
LS0LEM080C09M	LS0LEM080C09S	-	6,3	0,8	50	0,511	-
LS0LEM080C10M	LS0LEM080C10S	-	6,3	0,8	55	0,455	-
LS0LEM080C11M	LS0LEM080C11S	-	6,3	0,8	60	0,408	-
LS0LEM080C12M	LS0LEM080C12S	-	6,3	0,8	65	0,371	-
LS0LEM080C13M	LS0LEM080C13S	-	6,3	0,8	70	0,34	-
LS0LEM080C14M	LS0LEM080C14S	-	6,3	0,8	75	0,313	-
LS0LE045DD01M	LS0LE045DD01S	LSLE045DD01S3	10,67	1,14	25,4	3,116	-

MATERIAL - SURFACE TREATMENT
Spring Steel galvanized
AISI302 (Stainless steel) passivated
AISI316 (Stainless steel) passivated

NOTES
Loops at random position.
* The flexural load indicated in the table refers to the version in galvanized spring steel.
The load for the versions in AISI302 and AISI316 is 83.3% of that value.
** Minimum order 5 pcs.

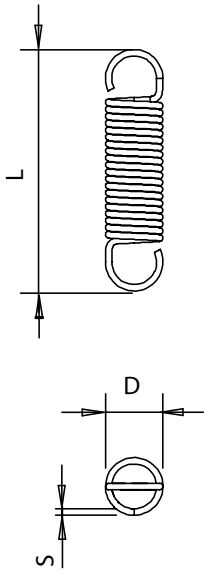

Code spring steel	Code AISI302	Code AISI316	D	S	L	Flexural load (N/mm) *	Package (pcs) **
LS0LE045DD02M	LS0LE045DD02S	LSLE045DD02S3	10,67	1,14	28,58	2,189	-
LS0LE045DD03M	LS0LE045DD03S	LSLE045DD03S3	10,67	1,14	31,75	1,687	-
LS0LE045DD04M	LS0LE045DD04S	LSLE045DD04S3	10,67	1,14	34,93	1,371	-
LS0LE045DD05M	LS0LE045DD05S	LSLE045DD05S3	10,67	1,14	38,1	1,156	-
LS0LE045DD06M	LS0LE045DD06S	LSLE045DD06S3	10,67	1,14	44,45	0,879	-
LS0LE045DD07M	LS0LE045DD07S	LSLE045DD07S3	10,67	1,14	50,8	0,709	-
LS0LE045DD08M	LS0LE045DD08S	LSLE045DD08S3	10,67	1,14	57,15	0,595	-
LS0LE045DD09M	LS0LE045DD09S	LSLE045DD09S3	10,67	1,14	63,5	0,511	-
LS0LE045DD10M	LS0LE045DD10S	LSLE045DD10S3	10,67	1,14	69,85	0,45	-
LS0LE045DD11M	LS0LE045DD11S	LSLE045DD11S3	10,67	1,14	76,2	0,401	-
LS0LE055DD01M	LS0LE055DD01S	LSLE055DD01S3	10,67	1,4	25,4	9,913	-
LS0LE055DD02M	LS0LE055DD02S	LSLE055DD02S3	10,67	1,4	28,58	6,795	-
LS0LE055DD03M	LS0LE055DD03S	LSLE055DD03S3	10,67	1,4	31,75	5,079	-
LS0LE055DD04M	LS0LE055DD04S	LSLE055DD04S3	10,67	1,4	34,93	4,116	-
LS0LE055DD05M	LS0LE055DD05S	LSLE055DD05S3	10,67	1,4	38,1	3,415	-
LS0LE055DD06M	LS0LE055DD06S	LSLE055DD06S3	10,67	1,4	44,45	2,574	-
LS0LE055DD07M	LS0LE055DD07S	LSLE055DD07S3	10,67	1,4	50,8	2,067	-
LS0LE055DD08M	LS0LE055DD08S	LSLE055DD08S3	10,67	1,4	57,15	1,716	-
LS0LE055DD09M	LS0LE055DD09S	LSLE055DD09S3	10,67	1,4	63,5	1,471	-
LS0LE055DD10M	LS0LE055DD10S	LSLE055DD10S3	10,67	1,4	69,85	1,296	-
LS0LE055DD11M	LS0LE055DD11S	LSLE055DD11S3	10,67	1,4	76,2	1,156	-
LS00LE037E01M	LS00LE037E01S	LS0LE037E01S3	12,7	0,94	31,75	0,525	-
LS00LE037E02M	LS00LE037E02S	LS0LE037E02S3	12,7	0,94	34,93	0,385	-
LS00LE037E03M	LS00LE037E03S	LS0LE037E03S3	12,7	0,94	38,1	0,298	-
LS00LE037E04M	LS00LE037E04S	LS0LE037E04S3	12,7	0,94	44,45	0,21	-
LS00LE037E05M	LS00LE037E05S	LS0LE037E05S3	12,7	0,94	50,8	0,158	-
LS00LE037E06M	LS00LE037E06S	LS0LE037E06S3	12,7	0,94	57,15	0,135	-
LS00LE037E07M	LS00LE037E07S	LS0LE037E07S3	12,7	0,94	63,5	0,123	-
LS00LE037E08M	LS00LE037E08S	LS0LE037E08S3	12,7	0,94	69,85	0,105	-
LS00LE037E09M	LS00LE037E09S	LS0LE037E09S3	12,7	0,94	76,2	0,088	-
LS00LE037E10M	LS00LE037E10S	LS0LE037E10S3	12,7	0,94	88,9	0,07	-
LS00LE037E11M	LS00LE037E11S	LS0LE037E11S3	12,7	0,94	101,6	0,053	-
LS00LE037E12M	LS00LE037E12S	LS0LE037E12S3	12,7	0,94	114,3	0,051	-
LS00LE037E13M	LS00LE037E13S	LS0LE037E13S3	12,7	0,94	127	0,035	-
LS000LE063E0M	LS000LE063E0S	LS00LE063E0S3	12,7	1,6	31,75	7,116	-
LS00LE063E01M	LS00LE063E01S	LS0LE063E01S3	12,7	1,6	34,93	5,499	-
LS00LE063E02M	LS00LE063E02S	LS0LE063E02S3	12,7	1,6	38,1	4,501	-
LS00LE063E03M	LS00LE063E03S	LS0LE063E03S3	12,7	1,6	44,45	3,31	-
LS00LE063E04M	LS00LE063E04S	LS0LE063E04S3	12,7	1,6	50,8	2,609	-

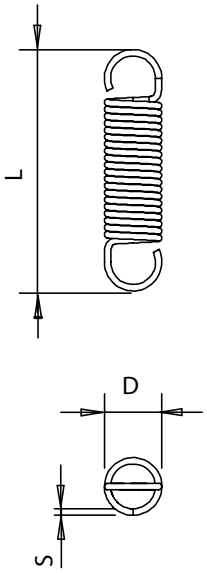

MATERIAL - SURFACE TREATMENT
Spring Steel galvanized
AISI302 (Stainless steel) passivated
AISI316 (Stainless steel) passivated

NOTES
Loops at random position.
* The flexural load indicated in the table refers to the version in galvanized spring steel. The load for the versions in AISI302 and AISI316 is 83.3% of that value.
** Minimum order 5 pcs.

Code spring steel	Code AISI302	Code AISI316	D	S	L	Flexural load (N/mm) *	Package (pcs) **
LS00LE063E05M	**LS00LE063E05S**	**LS0LE063E05S3**	12,7	1,6	57,15	2,154	-
LS00LE063E06M	**LS00LE063E06S**	**LS0LE063E06S3**	12,7	1,6	63,5	1,874	-
LS00LE063E07M	**LS00LE063E07S**	**LS0LE063E07S3**	12,7	1,6	69,85	1,594	-
LS00LE063E08M	**LS00LE063E08S**	**LS0LE063E08S3**	12,7	1,6	76,2	1,436	-
LS00LE063E09M	**LS00LE063E09S**	**LS0LE063E09S3**	12,7	1,6	88,9	1,173	-
LS00LE063E10M	**LS00LE063E10S**	**LS0LE063E10S3**	12,7	1,6	101,6	0,981	-
LS00LE063E11M	**LS00LE063E11S**	**LS0LE063E11S3**	12,7	1,6	114,3	0,841	-
LS00LE063E12M	**LS00LE063E12S**	**LS0LE063E12S3**	12,7	1,6	127	0,753	-
LS00LE085G01M	**LS00LE085G01S**	-	19,05	2,16	50,8	5,492	-
LS00LE085G02M	**LS00LE085G02S**	-	19,05	2,16	57,15	4,06	-
LS00LE085G03M	**LS00LE085G03S**	-	19,05	2,16	63,5	3,219	-
LS00LE085G04M	**LS00LE085G04S**	-	19,05	2,16	69,85	2,594	-
LS00LE085G05M	**LS00LE085G05S**	-	19,05	2,16	76,2	2,277	-
LS00LE085G06M	**LS00LE085G06S**	-	19,05	2,16	88,9	1,751	-
LS00LE085G07M	**LS00LE085G07S**	-	19,05	2,16	101,6	1,436	-
LS00LE085G08M	**LS00LE085G08S**	-	19,05	2,16	114,3	1,212	-
LS00LE085G09M	**LS00LE085G09S**	-	19,05	2,16	127	1,061	-
LS00LE112G01M	**LS00LE112G01S**	-	19,05	2,84	50,8	20,436	-
LS00LE112G02M	**LS00LE112G02S**	-	19,05	2,84	57,15	15,732	-
LS00LE112G03M	**LS00LE112G03S**	-	19,05	2,84	63,5	12,788	-
LS00LE112G04M	**LS00LE112G04S**	-	19,05	2,84	69,85	10,772	-
LS00LE112G05M	**LS00LE112G05S**	-	19,05	2,84	76,2	9,305	-
LS00LE112G06M	**LS00LE112G06S**	-	19,05	2,84	88,9	7,314	-
LS00LE112G07M	**LS00LE112G07S**	-	19,05	2,84	101,6	6,025	-
LS00LE112G08M	**LS00LE112G08S**	-	19,05	2,84	114,3	5,121	-
LS00LE112G09M	**LS00LE112G09S**	-	19,05	2,84	127	4,454	-
LS00LE112G10M	**LS00LE112G10S**	-	19,05	2,84	139,7	3,94	-
LS00LE112G11M	**LS00LE112G11S**	-	19,05	2,84	152,4	3,532	-

MATERIAL - SURFACE TREATMENT
Spring Steel galvanized
AISI302 (Stainless steel) passivated
AISI316 (Stainless steel) passivated

NOTES
* The max torque indicated in the table refers to the version in galvanized spring steel.
The torque for the versions in AISI302 and AISI316 is 93.3% of that value.
** Minimum order 5 pcs.

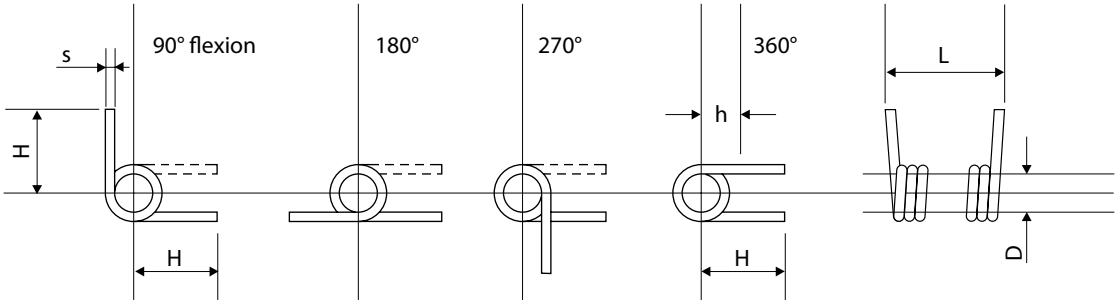

Code spring steel	Code AISI302	Code AISI316	Winding	Free position	S	Torque (N/mm) *	h	H	D	L	Turns	Package (pcs) **
LS0LTL012A01M	**LS0LTL012A01S**	**LSLTL012A01S3**	Left-handed	90°	0,3	5,65	4,76	9,53	2,67	1,65	3,25	-
LS0LTL012A07M	**LS0LTL012A07S**	**LSLTL012A07S3**	Left-handed	90°	0,3	5,42	6,35	12,7	3,71	2,39	2,25	-
LS0LTL012A02M	**LS0LTL012A02S**	**LSLTL012A02S3**	Left-handed	180°	0,3	5,65	4,76	9,53	2,79	1,7	6	-
LS0LTL012A04M	**LS0LTL012A04S**	**LSLTL012A04S3**	Left-handed	180°	0,3	5,65	6,35	12,7	4,24	2,77	4	-
LS0LTL012A03M	**LS0LTL012A03S**	**LSLTL012A03S3**	Left-handed	270°	0,3	5,65	4,76	9,53	2,62	1,57	9,75	-
LS0LTL012A05M	**LS0LTL012A05S**	**LSLTL012A05S3**	Left-handed	270°	0,3	5,65	6,35	12,7	4,34	2,77	5,75	-
LS0LTL012A06M	**LS0LTL012A06S**	**LSLTL012A06S3**	Left-handed	360°	0,3	5,65	6,35	12,7	4,42	2,77	7,5	-
LS0LTL012A08M	**LS0LTL012A08S**	**LSLTL012A08S3**	Left-handed	360°	0,3	5,65	9,53	19,05	5,61	3,96	5,5	-
LS0LTR012A01M	**LS0LTR012A01S**	**LSLTR012A01S3**	Right-handed	90°	0,3	5,65	4,76	9,53	2,67	1,65	3,25	-
LS0LTR012A07M	**LS0LTR012A07S**	**LSLTR012A07S3**	Right-handed	90°	0,3	5,42	6,35	12,7	3,71	2,39	2,25	-
LS0LTR012A02M	**LS0LTR012A02S**	**LSLTR012A02S3**	Right-handed	180°	0,3	5,65	4,76	9,53	2,79	1,7	6	-
LS0LTR012A04M	**LS0LTR012A04S**	**LSLTR012A04S3**	Right-handed	180°	0,3	5,65	6,35	12,7	4,24	2,77	4	-
LS0LTR012A03M	**LS0LTR012A03S**	**LSLTR012A03S3**	Right-handed	270°	0,3	5,65	4,76	9,53	2,62	1,57	9,75	-
LS0LTR012A05M	**LS0LTR012A05S**	**LSLTR012A05S3**	Right-handed	270°	0,3	5,65	6,35	12,7	4,34	2,77	5,75	-
LS0LTR012A06M	**LS0LTR012A06S**	**LSLTR012A06S3**	Right-handed	360°	0,3	5,65	6,35	12,7	4,42	2,77	7,5	-
LS0LTR012A08M	**LS0LTR012A08S**	**LSLTR012A08S3**	Right-handed	360°	0,3	5,65	9,53	19,05	5,61	3,96	5,5	-
LSLTML100J01M	**LSLTML100J01S**	-	Left-handed	90°	1	136,12	17,5	35	7	4	4,25	-
LSLTMR100J01M	**LSLTMR100J01S**	-	Right-handed	90°	1	136,12	17,5	35	7	4	4,25	-
LSLTML100J07M	**LSLTML100J07S**	-	Left-handed	90°	1	136,12	17,5	35	7	4	2,25	-
LSLTMR100J07M	**LSLTMR100J07S**	-	Right-handed	90°	1	136,12	17,5	35	7	4	2,25	-
LSLTML100J02M	**LSLTML100J02S**	-	Left-handed	180°	1	136,12	17,5	35	7	4	12	-
LSLTMR100J02M	**LSLTMR100J02S**	-	Right-handed	180°	1	136,12	17,5	35	7	4	12	-
LSLTML100J04M	**LSLTML100J04S**	-	Left-handed	180°	1	136,12	17,5	35	7	4	3	-
LSLTMR100J04M	**LSLTMR100J04S**	-	Right-handed	180°	1	136,12	17,5	35	7	4	3	-
LSLTML100J03M	**LSLTML100J03S**	-	Left-handed	270°	1	136,12	17,5	35	7	4	8,75	-
LSLTMR100J03M	**LSLTMR100J03S**	-	Right-handed	270°	1	136,12	17,5	35	7	4	8,75	-
LSLTML100J05M	**LSLTML100J05S**	-	Left-handed	270°	1	136,12	17,5	35	7	4	2,75	-
LSLTMR100J05M	**LSLTMR100J05S**	-	Right-handed	270°	1	136,12	17,5	35	7	4	2,75	-
LSLTML100J06M	**LSLTML100J06S**	-	Left-handed	360°	1	136,12	17,5	35	7	4	6,5	-
LSLTMR100J06M	**LSLTMR100J06S**	-	Right-handed	360°	1	136,12	17,5	35	7	4	6,5	-
LSLTML100J08M	**LSLTML100J08S**	-	Left-handed	360°	1	136,12	17,5	35	7	4	2,5	-
LSLTMR100J08M	**LSLTMR100J08S**	-	Right-handed	360°	1	136,12	17,5	35	7	4	2,5	-
LS0LTL059K01M	**LS0LTL059K01S**	**LSLTL059K01S3**	Left-handed	90°	1,5	508,43	25,4	50,8	12,67	7,92	4,25	-
LS0LTR059K01M	**LS0LTR059K01S**	**LSLTR059K01S3**	Right-handed	90°	1,5	508,43	25,4	50,8	12,67	7,92	4,25	-
LS0LTL059K07M	**LS0LTL059K07S**	**LSLTL059K07S3**	Left-handed	90°	1,5	508,43	25,4	50,8	16,1	11,91	3,25	-
LS0LTR059K07M	**LS0LTR059K07S**	**LSLTR059K07S3**	Right-handed	90°	1,5	508,43	25,4	50,8	16,1	11,91	3,25	-
LS0LTL059K02M	**LS0LTL059K02S**	**LSLTL059K02S3**	Left-handed	180°	1,5	508,43	25,4	50,8	13,36	8,51	8	-
LS0LTR059K02M	**LS0LTR059K02S**	**LSLTR059K02S3**	Right-handed	180°	1,5	508,43	25,4	50,8	13,36	8,51	8	-
LS0LTL059K04M	**LS0LTL059K04S**	**LSLTL059K04S3**	Left-handed	180°	1,5	508,43	25,4	50,8	17,3	11,91	6	-
LS0LTR059K04M	**LS0LTR059K04S**	**LSLTR059K04S3**	Right-handed	180°	1,5	508,43	25,4	50,8	17,3	11,91	6	-

MATERIAL - SURFACE TREATMENT
Spring Steel galvanized
AISI302 (Stainless steel) passivated
AISI316 (Stainless steel) passivated

NOTES
* The max torque indicated in the table refers to the version in galvanized spring steel.
The torque for the versions in AISI302 and AISI316 is 93.3% of that value.
** Minimum order 5 pcs.

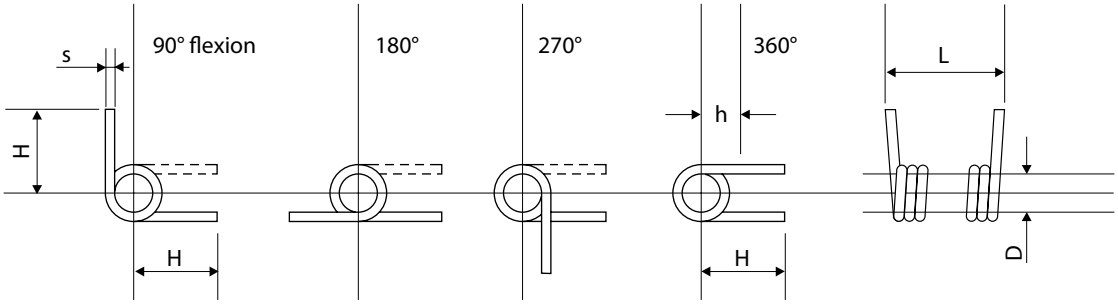

Code spring steel	Code AISI302	Code AISI316	Winding	Free position	S	Torque (N/mm) *	h	H	D	L	Turns	Package (pcs) **
LS0LTL059K03M	**LS0LTL059K03S**	**LSLTL059K03S3**	Left-handed	270°	1,5	508,43	25,4	50,8	13,64	8,89	11,75	-
LS0LTR059K03M	**LS0LTR059K03S**	**LSLTR059K03S3**	Right-handed	270°	1,5	508,43	25,4	50,8	13,64	8,89	11,75	-
LS0LTL059K05M	**LS0LTL059K05S**	**LSLTL059K05S3**	Left-handed	270°	1,5	508,43	25,4	50,8	17,75	12,32	8,75	-
LS0LTR059K05M	**LS0LTR059K05S**	**LSLTR059K05S3**	Right-handed	270°	1,5	508,43	25,4	50,8	17,75	12,32	8,75	-
LS0LTL059K06M	**LS0LTL059K06S**	**LSLTL059K06S3**	Left-handed	360°	1,5	508,43	25,4	50,8	18,01	12,45	11,5	-
LS0LTR059K06M	**LS0LTR059K06S**	**LSLTR059K06S3**	Right-handed	360°	1,5	508,43	25,4	50,8	18,01	12,45	11,5	-
LS0LTL059K08M	**LS0LTL059K08S**	**LSLTL059K08S3**	Left-handed	360°	1,5	508,43	25,4	50,8	23,85	17,86	8,5	-
LS0LTR059K08M	**LS0LTR059K08S**	**LSLTR059K08S3**	Right-handed	360°	1,5	508,43	25,4	50,8	23,85	17,86	8,5	-
LSLTML200S01M	**LSLTML200S01S**	-	Left-handed	90°	2	978,56	30	60	13	8	4,25	-
LSLTMR200S01M	**LSLTMR200S01S**	-	Right-handed	90°	2	978,56	30	60	13	8	4,25	-
LSLTML200S07M	**LSLTML200S07S**	-	Left-handed	90°	2	978,56	30	60	13	8	2,25	-
LSLTMR200S07M	**LSLTMR200S07S**	-	Right-handed	90°	2	978,56	30	60	13	8	2,25	-
LSLTML200S02M	**LSLTML200S02S**	-	Left-handed	180°	2	978,56	30	60	13	8	12	-
LSLTMR200S02M	**LSLTMR200S02S**	-	Right-handed	180°	2	978,56	30	60	13	8	12	-
LSLTML200S04M	**LSLTML200S04S**	-	Left-handed	180°	2	978,56	30	60	13	8	3	-
LSLTMR200S04M	**LSLTMR200S04S**	-	Right-handed	180°	2	978,56	30	60	13	8	3	-
LSLTML200S03M	**LSLTML200S03S**	-	Left-handed	270°	2	978,56	30	60	13	8	8,75	-
LSLTMR200S03M	**LSLTMR200S03S**	-	Right-handed	270°	2	978,56	30	60	13	8	8,75	-
LSLTML200S05M	**LSLTML200S05S**	-	Left-handed	270°	2	978,56	30	60	13	8	2,75	-
LSLTMR200S05M	**LSLTMR200S05S**	-	Right-handed	270°	2	978,56	30	60	13	8	2,75	-
LSLTML200S06M	**LSLTML200S06S**	-	Left-handed	360°	2	978,56	30	60	13	8	6,5	-
LSLTMR200S06M	**LSLTMR200S06S**	-	Right-handed	360°	2	978,56	30	60	13	8	6,5	-
LSLTML200S08M	**LSLTML200S08S**	-	Left-handed	360°	2	978,56	30	60	13	8	2,5	-
LSLTMR200S08M	**LSLTMR200S08S**	-	Right-handed	360°	2	978,56	30	60	13	8	2,5	-
LS0LTL125S01M	**LS0LTL125S01S**	-	Left-handed	90°	3,18	3615,51	50,8	101,6	25,12	15,01	6,25	-
LS0LTR125S01M	**LS0LTR125S01S**	-	Right-handed	90°	3,18	3615,51	50,8	101,6	25,12	15,01	6,25	-
LS0LTL125S07M	**LS0LTL125S07S**	-	Left-handed	90°	3,18	3615,51	50,8	101,6	34,85	26,19	4,25	-
LS0LTR125S07M	**LS0LTR125S07S**	-	Right-handed	90°	3,18	3615,51	50,8	101,6	34,85	26,19	4,25	-
LS0LTL125S02M	**LS0LTL125S02S**	-	Left-handed	180°	3,18	3615,51	50,8	101,6	27,48	16,92	11	-
LS0LTR125S02M	**LS0LTR125S02S**	-	Right-handed	180°	3,18	3615,51	50,8	101,6	27,48	16,92	11	-
LS0LTL125S04M	**LS0LTL125S04S**	-	Left-handed	180°	3,18	3615,51	50,8	101,6	34,44	22,48	8	-
LS0LTR125S04M	**LS0LTR125S04S**	-	Right-handed	180°	3,18	3615,51	50,8	101,6	34,44	22,48	8	-
LS0LTL125S03M	**LS0LTL125S03S**	-	Left-handed	270°	3,18	3615,51	50,8	101,6	30,2	19,08	14,75	-
LS0LTR125S03M	**LS0LTR125S03S**	-	Right-handed	270°	3,18	3615,51	50,8	101,6	30,2	19,08	14,75	-
LS0LTL125S05M	**LS0LTL125S05S**	-	Left-handed	270°	3,18	3615,51	50,8	101,6	38,51	25,73	11,75	-
LS0LTR125S05M	**LS0LTR125S05S**	-	Right-handed	270°	3,18	3615,51	50,8	101,6	38,51	25,73	11,75	-
LS0LTL125S06M	**LS0LTL125S06S**	-	Left-handed	360°	3,18	3615,51	50,8	101,6	40,77	27,53	14,5	-
LS0LTR125S06M	**LS0LTR125S06S**	-	Right-handed	360°	3,18	3615,51	50,8	101,6	40,77	27,53	14,5	-
LS0LTL125S08M	**LS0LTL125S08S**	-	Left-handed	360°	3,18	3615,51	50,8	101,6	49,99	38,51	11,5	-
LS0LTR125S08M	**LS0LTR125S08S**	-	Right-handed	360°	3,18	3615,51	50,8	101,6	49,99	38,51	11,5	-

MATERIAL
AISI301 (Stainless steel)

NOTES
** Minimum order 5 pcs.
L = Total strip lenght

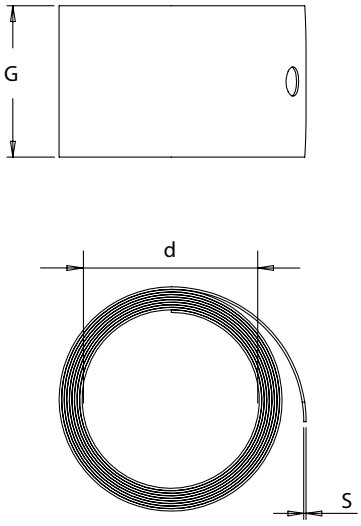

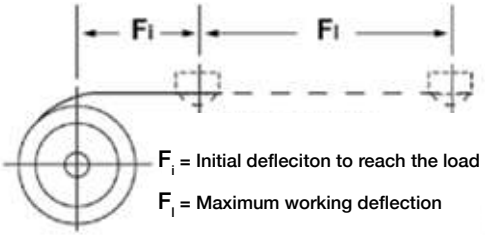

F_i = Initial defleciton to reach the load

F_l = Maximum working deflection

Code	no. life cycles	d	Ø Drum	G	S	L	Fi	Fl	Load ± 20% (N)	Package (pcs) **
LS0LCF02504025S	2500	7,54	8,86	6,35	0,1	355,6	13,2	304,8	2,94	-
LS0LCF02505031S	2500	9,12	11,07	7,92	0,13	381	16,5	304,8	4,58	-
LS0LCF02506038S	2500	11,13	13,28	9,53	0,15	533,4	19,8	457,2	6,58	-
LS0LCF02506050S	2500	11,13	13,28	12,7	0,15	533,4	19,8	457,2	8,76	-
LS0LCF02508050S	2500	14,68	17,7	12,7	0,2	711,2	26,9	609,6	11,7	-
LS0LCF02510063S	2500	18,64	22,17	15,88	0,25	736,6	33,3	609,6	18,33	-
LS0LCF02512075S	2500	22,23	26,67	19,05	0,3	914,4	39,6	762	26,42	-
LS0LCF02512100S	2500	22,23	26,67	25,4	0,3	914,4	39,6	762	35,23	-
LS0LCF02516100S	2500	29,36	35,56	25,4	0,41	965,2	53,3	762	47,15	-
LS0LCF02520125S	2500	37,31	44,45	31,75	0,51	1193,8	66	914,4	73,4	-
LS0LCF04004025S	4000	8,64	10,16	6,35	0,1	381	15,5	304,8	2,22	-
LS0LCF04005031S	4000	9,4	12,7	7,92	0,13	431,8	19,1	304,8	4,58	-
LS0LCF04006038S	4000	11,43	15,75	9,53	0,15	609,6	23,9	457,2	6,58	-
LS0LCF04006050S	4000	11,43	16,51	12,7	0,15	635	24,6	457,2	8,76	-
LS0LCF04008050S	4000	14,99	20,83	12,7	0,2	762	31,5	609,6	11,7	-
LS0LCF04010063S	4000	18,54	25,15	15,88	0,25	838,2	37,8	609,6	18,33	-
LS0LCF04012075S	4000	22,35	30,23	19,05	0,3	990,6	45,5	762	26,42	-
LS0LCF04012100S	4000	22,35	30,48	25,4	0,3	990,6	45,7	762	35,23	-
LS0LCF04016100S	4000	30,48	38,61	25,4	0,41	1016	57,9	762	47,15	-
LS0LCF04020125S	4000	37,34	48,01	31,75	0,51	1270	71,9	914,4	73,4	-
LS0LCF13004025S	13000	11,13	13,54	6,35	0,1	381	20,3	304,8	1,42	-
LS0LCF13005031S	13000	14,3	16,89	7,92	0,13	406,4	25,4	304,8	2,18	-
LS0LCF13006038S	13000	17,07	20,27	9,53	0,15	584,2	30,5	457,2	3,16	-
LS0LCF13006050S	13000	17,07	20,27	12,7	0,15	584,2	30,5	457,2	4,23	-
LS0LCF13008050S	13000	22,23	26,92	12,7	0,2	762	40,4	609,6	5,6	-
LS0LCF13010063S	13000	28,17	33,78	15,88	0,25	812,8	50,8	609,6	8,81	-
LS0LCF13012075S	13000	34,14	40,39	19,05	0,3	1016	60,5	762	12,63	-
LS0LCF13012100S	13000	34,14	40,39	25,4	0,3	1016	60,5	762	16,86	-
LS0LCF13015100S	13000	42,47	50,55	25,4	0,38	1066,8	75,7	762	21,08	-
LS0LCF13020125S	13000	56,36	67,31	31,75	0,51	1320,8	100,8	914,4	42,17	-

MATERIAL
AISI301 (Stainless steel)

NOTES
** Minimum order 5 pcs.
L = Total strip lenght

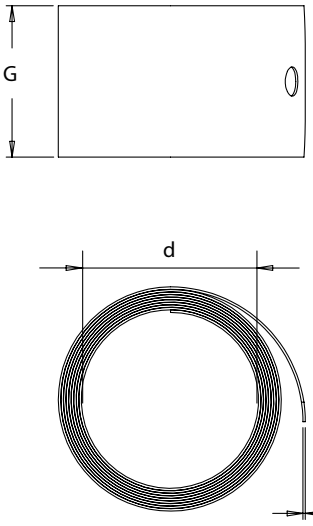

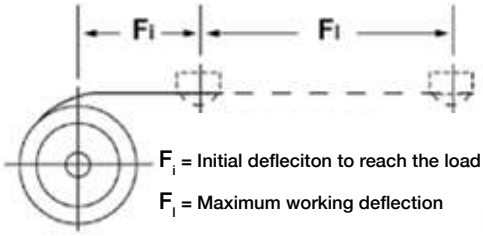

F_i = Initial defleciton to reach the load

F_l = Maximum working deflection

Code	no. life cycles	d	Ø Drum	G	S	L	Fi	Fl	Load ± 20% (N)	Package (pcs) **
LS0LCF25004025S	25000	13,46	14,99	6,35	0,1	558,8	22,4	457,2	1,02	-
LS0LCF25005038S	25000	16,51	18,54	9,53	0,13	736,6	27,7	609,6	1,91	-
LS0LCF25006038S	25000	19,56	21,84	9,53	0,15	762	33	609,6	2,31	-
LS0LCF25006050S	25000	20,32	22,86	12,7	0,15	762	34,5	609,6	3,11	-
LS0LCF25008050S	25000	27,18	30,48	12,7	0,2	965,2	45,7	762	4,14	-
LS0LCF25010063S	25000	34,54	38,61	15,88	0,25	1016	57,9	762	6,49	-
LS0LCF25012075S	25000	40,64	45,47	19,05	0,3	1219,2	68,3	914,4	9,3	-
LS0LCF25012100S	25000	40,64	45,47	25,4	0,3	1219,2	68,3	914,4	12,46	-
LS0LCF25015100S	25000	49,78	55,88	25,4	0,38	1422,4	83,8	1066,8	15,57	-
LS0LCF25020125S	25000	64,26	71,88	31,75	0,51	1524	108	1066,8	25,93	-

MATERIAL - SURFACE TREATMENT
Spring Steel nickel-plated
CU-BE (Beryllium copper alloy) silver-plated

NOTES
** Minimum order 5 pcs.

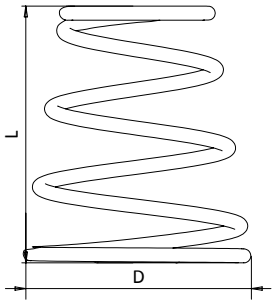

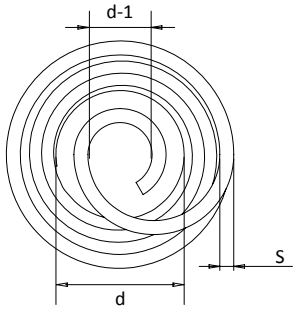

Code spring steel	Code CU-BE	Battery size	D	d	d-1	L	S	Load (N)	Solid height	Package (pcs) **
LS0LB024A01AA	-	AA	9,91	5,59	2,77	11,18	0,61	7,78	3,61	-
LSLB024A01AAA	-	AAA	9,14	4,06	2,77	9,02	0,61	6,67	4,95	-
LS00LB032A01C	-	C	13,72	8,38	4,39	13,21	0,81	4,45	8,64	-
LS00LB036A01D	-	D	16,76	9,14	4,42	18,29	0,91	13,34	4,45	-
-	**LSLBC028A01AA**	AA	9,91	5,59	2,77	11,18	0,71	7,78	3,61	-
-	**LS0LBC028A01AAA**	AAA	9,14	4,06	2,77	9,02	0,71	6,67	4,95	-
-	**LS0LBC038A01C**	C	13,72	8,38	4,39	13,21	0,97	4,45	8,64	-
-	**LS0LBC040A01D**	D	16,76	9,14	4,42	18,29	1,02	13,34	4,45	-

BATTERY SPRING
exterior mount

MATERIAL - SURFACE TREATMENT
Spring Steel nickel-plated
CU-BE (Beryllium copper alloy) silver-plated

NOTES
** Minimum order 5 pcs.

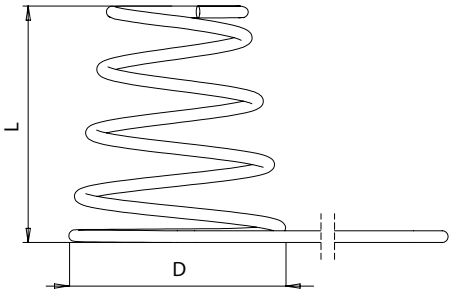

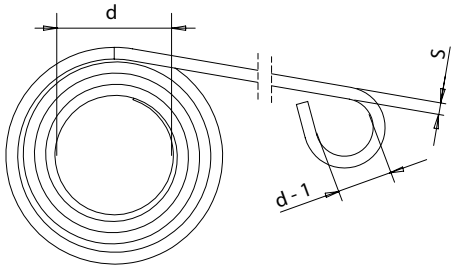

Code spring steel	Code CU-BE	Battery size	D	d	d - 1	L	S	Load (N)	Solid height	Package (pcs) **
LS0LB024B01AA	-	AA	9,91	5,59	2,79	11,18	0,61	7,78	3,61	-
LSLB024B01AAA	-	AAA	9,14	4,06	2,79	9,02	0,61	6,67	4,95	-
LS00LB032B01C	-	C	13,72	8,38	4,45	13,21	0,81	4,45	8,64	-
LS00LB036B01D	-	D	16,76	9,14	4,45	18,29	0,91	13,34	4,45	-
-	**LSLBC028B01AA**	AA	9,91	5,59	2,79	11,18	0,71	7,78	3,61	-
-	**LS0LBC028B01AAA**	AAA	9,14	4,06	2,79	9,02	0,71	6,67	4,95	-
-	**LS0LBC038B01C**	C	13,72	8,38	4,45	13,21	0,97	4,45	8,64	-
-	**LS0LBC040B01D**	D	16,76	9,14	4,45	18,29	1,02	13,34	4,45	-

MATERIAL - SURFACE TREATMENT
Spring Steel nickel-plated
CU-BE (Beryllium copper alloy) silver-plated

NOTES
** Minimum order 5 pcs.

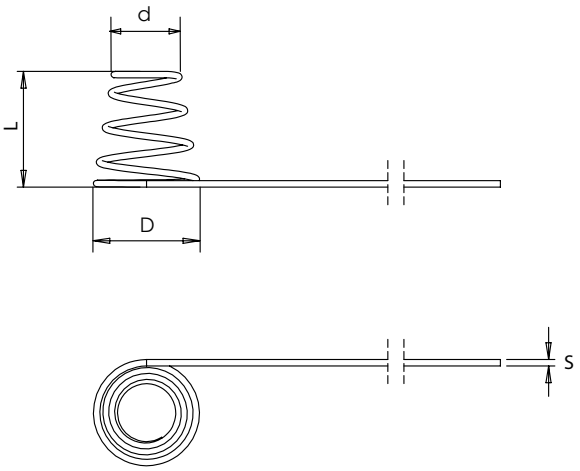

Code spring steel	Code CU-BE	Battery size	D	d	L	S	Load (N)	Solid height	Package (pcs) **
LS0LB024C01AA	-	AA	9,91	5,59	11,18	0,61	7,78	3,61	-
LSLB024C01AAA	-	AAA	9,14	4,06	9,02	0,61	6,67	4,95	-
LS00LB032C01C	-	C	13,72	8,38	13,21	0,81	4,45	8,64	-
LS00LB036C01D	-	D	16,76	9,14	18,29	0,91	13,34	4,45	-
-	**LSLBC028C01AA**	AA	9,91	5,59	11,18	0,71	7,78	3,61	-
-	**LS0LBC028C01AAA**	AAA	9,14	4,06	9,02	0,71	6,67	4,95	-
-	**LS0LBC038C01C**	C	13,72	8,38	13,21	0,97	4,45	8,64	-
-	**LS0LBC040C01D**	D	16,76	9,14	18,29	1,02	13,34	4,45	-

BATTERY SPRING
double mount

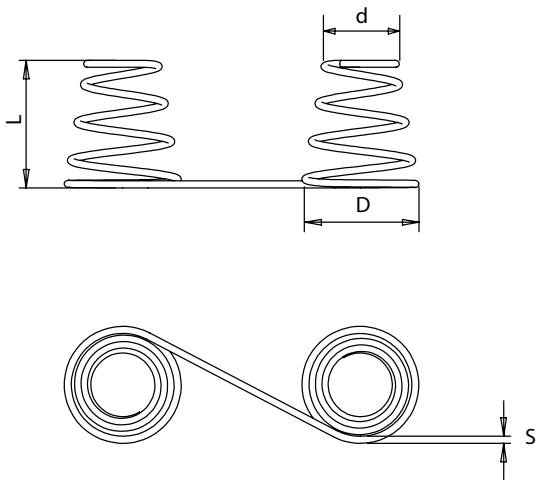

MATERIAL - SURFACE TREATMENT
Spring Steel nickel-plated
CU-BE (Beryllium copper alloy) silver-plated

NOTES
** Minimum order 5 pcs.

Code spring steel	Code CU-BE	Battery size	D	d	L	S	Load (N)	Solid height	Package (pcs) **
LS0LB024D01AA	-	AA	9,91	5,59	11,18	0,61	7,78	3,61	-
LSLB024D01AAA	-	AAA	9,14	4,06	9,02	0,61	6,67	4,95	-
LS00LB032D01C	-	C	13,72	8,38	13,21	0,81	4,45	8,64	-
LS00LB036D01D	-	D	16,76	9,14	18,29	0,91	13,34	4,45	-
-	**LSLBC028D01AA**	AA	9,91	5,59	11,18	0,71	7,78	3,61	-
-	**LS0LBC028D01AAA**	AAA	9,14	4,06	9,02	0,71	6,67	4,95	-
-	**LS0LBC038D01C**	C	13,72	8,38	13,21	0,97	4,45	8,64	-
-	**LS0LBC040D01D**	D	16,76	9,14	18,29	1,02	13,34	4,45	-

MATERIAL
Spring Steel oiled
AISI302 (Stainless steel)

NOTES
* The initial tension indicated in the table refers to the version in spring steel.
The values for the AISI302 version are 83.3% of this data.
** Minimum order 5 pcs.

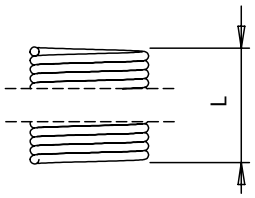

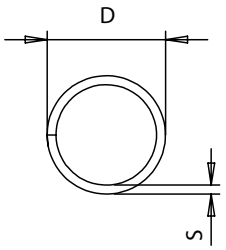

Code spring steel	Code AISI302	D	S	L	Initial tension (N) *	Coils / mm	Package (pcs) **
LS0LEC014A12M	**LS0LEC014A12S**	3,18	0,36	304,8	0,53	2,8	-
LS0LEC014A24M	**LS0LEC014A24S**	3,18	0,36	609,6	0,53	2,8	-
LS0LEC014A36M	**LS0LEC014A36S**	3,18	0,36	914,4	0,53	2,8	-
LS0LEC016A12M	**LS0LEC016A12S**	3,18	0,41	304,8	0,89	2,5	-
LS0LEC016A24M	**LS0LEC016A24S**	3,18	0,41	609,6	0,89	2,5	-
LS0LEC016A36M	**LS0LEC016A36S**	3,18	0,41	914,4	0,89	2,5	-
LS0LEC018A12M	**LS0LEC018A12S**	3,18	0,46	304,8	1,33	2,2	-
LS0LEC018A24M	**LS0LEC018A24S**	3,18	0,46	609,6	1,33	2,2	-
LS0LEC018A36M	**LS0LEC018A36S**	3,18	0,46	914,4	1,33	2,2	-
LS0LEC020A12M	**LS0LEC020A12S**	3,18	0,51	304,8	1,78	2	-
LS0LEC020A24M	**LS0LEC020A24S**	3,18	0,51	609,6	1,78	2	-
LS0LEC020A36M	**LS0LEC020A36S**	3,18	0,51	914,4	1,78	2	-
LS0LEC022A12M	**LS0LEC022A12S**	3,18	0,56	304,8	2	1,8	-
LS0LEC022A24M	**LS0LEC022A24S**	3,18	0,56	609,6	2	1,8	-
LS0LEC022A36M	**LS0LEC022A36S**	3,18	0,56	914,4	2	1,8	-
LS0LEC018C12M	**LS0LEC018C12S**	6,35	0,46	304,8	0,44	2,2	-
LS0LEC018C24M	**LS0LEC018C24S**	6,35	0,46	609,6	0,44	2,2	-
LS0LEC018C36M	**LS0LEC018C36S**	6,35	0,46	914,4	0,44	2,2	-
LS0LEC022C12M	**LS0LEC022C12S**	6,35	0,56	304,8	0,89	1,8	-
LS0LEC022C24M	**LS0LEC022C24S**	6,35	0,56	609,6	0,89	1,8	-
LS0LEC022C36M	**LS0LEC022C36S**	6,35	0,56	914,4	0,89	1,8	-
LS0LEC026C12M	**LS0LEC026C12S**	6,35	0,66	304,8	1,78	1,5	-
LS0LEC026C24M	**LS0LEC026C24S**	6,35	0,66	609,6	1,78	1,5	-
LS0LEC026C36M	**LS0LEC026C36S**	6,35	0,66	914,4	1,78	1,5	-
LS0LEC029C12M	**LS0LEC029C12S**	6,35	0,74	304,8	2,45	1,4	-
LS0LEC029C24M	**LS0LEC029C24S**	6,35	0,74	609,6	2,45	1,4	-
LS0LEC029C36M	**LS0LEC029C36S**	6,35	0,74	914,4	2,45	1,4	-
LS0LEC031C12M	**LS0LEC031C12S**	6,35	0,79	304,8	3,11	1,3	-
LS0LEC031C24M	**LS0LEC031C24S**	6,35	0,79	609,6	3,11	1,3	-
LS0LEC031C36M	**LS0LEC031C36S**	6,35	0,79	914,4	3,11	1,3	-
LS0LEC034C12M	**LS0LEC034C12S**	6,35	0,86	304,8	3,78	1,2	-
LS0LEC034C24M	**LS0LEC034C24S**	6,35	0,86	609,6	3,78	1,2	-
LS0LEC034C36M	**LS0LEC034C36S**	6,35	0,86	914,4	3,78	1,2	-
LS0LEC037C12M	**LS0LEC037C12S**	6,35	0,94	304,8	4,45	1,1	-
LS0LEC037C24M	**LS0LEC037C24S**	6,35	0,94	609,6	4,45	1,1	-
LS0LEC037C36M	**LS0LEC037C36S**	6,35	0,94	914,4	4,45	1,1	-
LS0LEC041C12M	**LS0LEC041C12S**	6,35	1,04	304,8	4,67	1	-
LS0LEC041C24M	**LS0LEC041C24S**	6,35	1,04	609,6	4,67	1	-
LS0LEC041C36M	**LS0LEC041C36S**	6,35	1,04	914,4	4,67	1	-

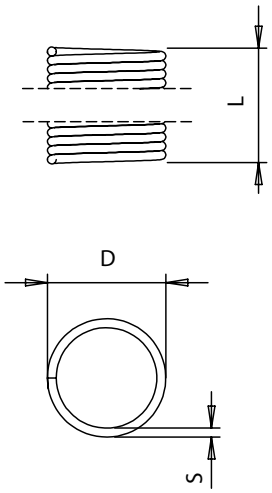

MATERIAL
Spring Steel oiled
AISI302 (Stainless steel)

NOTES
* The initial tension indicated in the table refers to the version in spring steel.
The values for the AISI302 version are 83.3% of this data.
** Minimum order 5 pcs.

Code spring steel	Code AISI302	D	S	L	Initial tension (N) *	Coils / mm	Package (pcs) **
LS0LEC026D12M	**LS0LEC026D12S**	9,53	0,66	304,8	0,98	1,5	-
LS0LEC026D24M	**LS0LEC026D24S**	9,53	0,66	609,6	0,98	1,5	-
LS0LEC026D36M	**LS0LEC026D36S**	9,53	0,66	914,4	0,98	1,5	-
LS0LEC031D12M	**LS0LEC031D12S**	9,53	0,79	304,8	1,33	1,3	-
LS0LEC031D24M	**LS0LEC031D24S**	9,53	0,79	609,6	1,33	1,3	-
LS0LEC031D36M	**LS0LEC031D36S**	9,53	0,79	914,4	1,33	1,3	-
LS0LEC034D12M	**LS0LEC034D12S**	9,53	0,86	304,8	2,22	1,2	-
LS0LEC034D24M	**LS0LEC034D24S**	9,53	0,86	609,6	2,22	1,2	-
LS0LEC034D36M	**LS0LEC034D36S**	9,53	0,86	914,4	2,22	1,2	-
LS0LEC037D12M	**LS0LEC037D12S**	9,53	0,94	304,8	3,11	1,1	-
LS0LEC037D24M	**LS0LEC037D24S**	9,53	0,94	609,6	3,11	1,1	-
LS0LEC037D36M	**LS0LEC037D36S**	9,53	0,94	914,4	3,11	1,1	-
LS0LEC039D12M	**LS0LEC039D12S**	9,53	0,99	304,8	3,56	1	-
LS0LEC039D24M	**LS0LEC039D24S**	9,53	0,99	609,6	3,56	1	-
LS0LEC039D36M	**LS0LEC039D36S**	9,53	0,99	914,4	3,56	1	-
LS0LEC041D12M	**LS0LEC041D12S**	9,53	1,04	304,8	4	1	-
LS0LEC041D24M	**LS0LEC041D24S**	9,53	1,04	609,6	4	1	-
LS0LEC041D36M	**LS0LEC041D36S**	9,53	1,04	914,4	4	1	-
LS0LEC045D12M	**LS0LEC045D12S**	9,53	1,14	304,8	5,34	0,9	-
LS0LEC045D24M	**LS0LEC045D24S**	9,53	1,14	609,6	5,34	0,9	-
LS0LEC045D36M	**LS0LEC045D36S**	9,53	1,14	914,4	5,34	0,9	-
LS0LEC049D12M	**LS0LEC049D12S**	9,53	1,24	304,8	6,67	0,8	-
LS0LEC049D24M	**LS0LEC049D24S**	9,53	1,24	609,6	6,67	0,8	-
LS0LEC049D36M	**LS0LEC049D36S**	9,53	1,24	914,4	6,67	0,8	-
LS0LEC052D12M	**LS0LEC052D12S**	9,53	1,32	304,8	7,78	0,8	-
LS0LEC052D24M	**LS0LEC052D24S**	9,53	1,32	609,6	7,78	0,8	-
LS0LEC052D36M	**LS0LEC052D36S**	9,53	1,32	914,4	7,78	0,8	-
LS0LEC055D12M	**LS0LEC055D12S**	9,53	1,4	304,8	8,9	0,7	-
LS0LEC055D24M	**LS0LEC055D24S**	9,53	1,4	609,6	8,9	0,7	-
LS0LEC055D36M	**LS0LEC055D36S**	9,53	1,4	914,4	8,9	0,7	-
LS0LEC058D12M	**LS0LEC058D12S**	9,53	1,47	304,8	11,12	0,7	-
LS0LEC058D24M	**LS0LEC058D24S**	9,53	1,47	609,6	11,12	0,7	-
LS0LEC058D36M	**LS0LEC058D36S**	9,53	1,47	914,4	11,12	0,7	-
LS0LEC034E12M	**LS0LEC034E12S**	12,7	0,86	304,8	1,33	1,2	-
LS0LEC034E24M	**LS0LEC034E24S**	12,7	0,86	609,6	1,33	1,2	-
LS0LEC034E36M	**LS0LEC034E36S**	12,7	0,86	914,4	1,33	1,2	-
LS0LEC037E12M	**LS0LEC037E12S**	12,7	0,94	304,8	1,78	1,1	-
LS0LEC037E24M	**LS0LEC037E24S**	12,7	0,94	609,6	1,78	1,1	-
LS0LEC037E36M	**LS0LEC037E36S**	12,7	0,94	914,4	1,78	1,1	-

MATERIAL
Spring Steel oiled
AISI302 (Stainless steel)

NOTES
* The initial tension indicated in the table refers to the version in spring steel.
The values for the AISI302 version are 83.3% of this data.
** Minimum order 5 pcs.

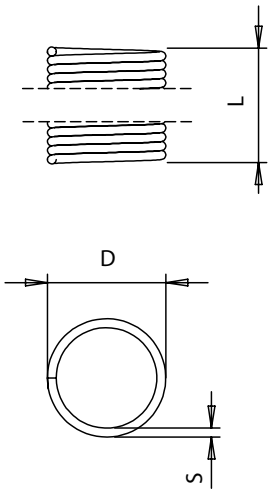

Code spring steel	Code AISI302	D	S	L	Initial tension (N) *	Coils / mm	Package (pcs) **
LS0LEC041E12M	**LS0LEC041E12S**	12,7	1,04	304,8	2,22	1	-
LS0LEC041E24M	**LS0LEC041E24S**	12,7	1,04	609,6	2,22	1	-
LS0LEC041E36M	**LS0LEC041E36S**	12,7	1,04	914,4	2,22	1	-
LS0LEC045E12M	**LS0LEC045E12S**	12,7	1,14	304,8	3,11	0,9	-
LS0LEC045E24M	**LS0LEC045E24S**	12,7	1,14	609,6	3,11	0,9	-
LS0LEC045E36M	**LS0LEC045E36S**	12,7	1,14	914,4	3,11	0,9	-
LS0LEC049E12M	**LS0LEC049E12S**	12,7	1,24	304,8	3,91	0,8	-
LS0LEC049E24M	**LS0LEC049E24S**	12,7	1,24	609,6	3,91	0,8	-
LS0LEC049E36M	**LS0LEC049E36S**	12,7	1,24	914,4	3,91	0,8	-
LS0LEC055E12M	**LS0LEC055E12S**	12,7	1,4	304,8	5,78	0,7	-
LS0LEC055E24M	**LS0LEC055E24S**	12,7	1,4	609,6	5,78	0,7	-
LS0LEC055E36M	**LS0LEC055E36S**	12,7	1,4	914,4	5,78	0,7	-
LS0LEC063E12M	**LS0LEC063E12S**	12,7	1,6	304,8	8,9	0,6	-
LS0LEC063E24M	**LS0LEC063E24S**	12,7	1,6	609,6	8,9	0,6	-
LS0LEC063E36M	**LS0LEC063E36S**	12,7	1,6	914,4	8,9	0,6	-
LS0LEC067E12M	**LS0LEC067E12S**	12,7	1,7	304,8	15,57	0,6	-
LS0LEC067E24M	**LS0LEC067E24S**	12,7	1,7	609,6	15,57	0,6	-
LS0LEC067E36M	**LS0LEC067E36S**	12,7	1,7	914,4	15,57	0,6	-
LS0LEC075E12M	**LS0LEC075E12S**	12,7	1,91	304,8	22,24	0,5	-
LS0LEC075E24M	**LS0LEC075E24S**	12,7	1,91	609,6	22,24	0,5	-
LS0LEC075E36M	**LS0LEC075E36S**	12,7	1,91	914,4	22,24	0,5	-
LS0LEC049G12M	**LS0LEC049G12S**	19,05	1,24	304,8	2,62	0,8	-
LS0LEC049G24M	**LS0LEC049G24S**	19,05	1,24	609,6	2,62	0,8	-
LS0LEC049G36M	**LS0LEC049G36S**	19,05	1,24	914,4	2,62	0,8	-
LS0LEC055G12M	**LS0LEC055G12S**	19,05	1,4	304,8	3,56	0,7	-
LS0LEC055G24M	**LS0LEC055G24S**	19,05	1,4	609,6	3,56	0,7	-
LS0LEC055G36M	**LS0LEC055G36S**	19,05	1,4	914,4	3,56	0,7	-
LS0LEC063G12M	**LS0LEC063G12S**	19,05	1,6	304,8	5,34	0,6	-
LS0LEC063G24M	**LS0LEC063G24S**	19,05	1,6	609,6	5,34	0,6	-
LS0LEC063G36M	**LS0LEC063G36S**	19,05	1,6	914,4	5,34	0,6	-
LS0LEC069G12M	**LS0LEC069G12S**	19,05	1,75	304,8	7,12	0,6	-
LS0LEC069G24M	**LS0LEC069G24S**	19,05	1,75	609,6	7,12	0,6	-
LS0LEC069G36M	**LS0LEC069G36S**	19,05	1,75	914,4	7,12	0,6	-
LS0LEC075G12M	**LS0LEC075G12S**	19,05	1,91	304,8	8,9	0,5	-
LS0LEC075G24M	**LS0LEC075G24S**	19,05	1,91	609,6	8,9	0,5	-
LS0LEC075G36M	**LS0LEC075G36S**	19,05	1,91	914,4	8,9	0,5	-
LS0LEC085G12M	**LS0LEC085G12S**	19,05	2,16	304,8	12,46	0,5	-
LS0LEC085G24M	**LS0LEC085G24S**	19,05	2,16	609,6	12,46	0,5	-
LS0LEC085G36M	**LS0LEC085G36S**	19,05	2,16	914,4	12,46	0,5	-

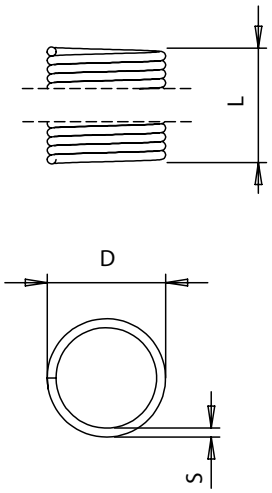

MATERIAL
Spring Steel oiled
AISI302 (Stainless steel)

NOTES
* The initial tension indicated in the table refers to the version in spring steel.
The values for the AISI302 version are 83.3% of this data.
** Minimum order 5 pcs.

Code spring steel	Code AISI302	D	S	L	Initial tension (N) *	Coils / mm	Package (pcs) **
LS0LEC093G12M	**LS0LEC093G12S**	19,05	2,36	304,8	15,57	0,4	-
LS0LEC093G24M	**LS0LEC093G24S**	19,05	2,36	609,6	15,57	0,4	-
LS0LEC093G36M	**LS0LEC093G36S**	19,05	2,36	914,4	15,57	0,4	-
LS0LEC105G12M	**LS0LEC105G12S**	19,05	2,67	304,8	26,69	0,4	-
LS0LEC105G24M	**LS0LEC105G24S**	19,05	2,67	609,6	26,69	0,4	-
LS0LEC105G36M	**LS0LEC105G36S**	19,05	2,67	914,4	26,69	0,4	-
LS0LEC112G12M	**LS0LEC112G12S**	19,05	2,84	304,8	35,59	0,4	-
LS0LEC112G24M	**LS0LEC112G24S**	19,05	2,84	609,6	35,59	0,4	-
LS0LEC112G36M	**LS0LEC112G36S**	19,05	2,84	914,4	35,59	0,4	-
LSLEC085JK12M	**LSLEC085JK12S**	28,58	2,16	304,8	8,41	0,5	-
LSLEC085JK24M	**LSLEC085JK24S**	28,58	2,16	609,6	8,41	0,5	-
LSLEC085JK36M	**LSLEC085JK36S**	28,58	2,16	914,4	8,41	0,5	-
LSLEC105JK12M	**LSLEC105JK12S**	28,58	2,67	304,8	15,12	0,4	-
LSLEC105JK24M	**LSLEC105JK24S**	28,58	2,67	609,6	15,12	0,4	-
LSLEC105JK36M	**LSLEC105JK36S**	28,58	2,67	914,4	15,12	0,4	-
LSLEC125JK12M	**LSLEC125JK12S**	28,58	3,18	304,8	24,51	0,3	-
LSLEC125JK24M	**LSLEC125JK24S**	28,58	3,18	609,6	24,51	0,3	-
LSLEC125JK36M	**LSLEC125JK36S**	28,58	3,18	914,4	24,51	0,3	-

Different types of loops and hooks are available for constant length extension springs:

Phase 1

Bend the spring 180 degrees at the desired length and cut the wire.

Phase 2

Where the wire has been cut, bend the last coil away 45 degrees. For a double loop, bend the last two coils 45 degrees. Do not use heat to help bend the wire.

Phase 3

Bend the cut end of the loop into the center of the body. This could require pliers. It might be necessary to bend the loop beyond the center of the body, to allow it to bend backwards.

Phase 4

Cut the end of the loop to create the space needed for assembly of the spring.

11

HANDLES AND CLAMPING LEVERS

Adjustable clamping levers
pag. 11.1

Cam levers
pag. 11.28

Recessed handles
pag. 11.33

Tubular handles
pag. 11.37

D-shaped handles
pag. 11.40

Bridge handles
pag. 11.42

Hand grips
pag. 11.45

20° ADJUSTABLE CLAMPING LEVER

BFC zamak - steel

MATERIAL - FINISH

Grip: ZAMA (Die-cast zinc) plastic coating

Bushing: Cl 5.8 (Steel) burnished

COLOUR

NE Satin black

AG Metallic silver

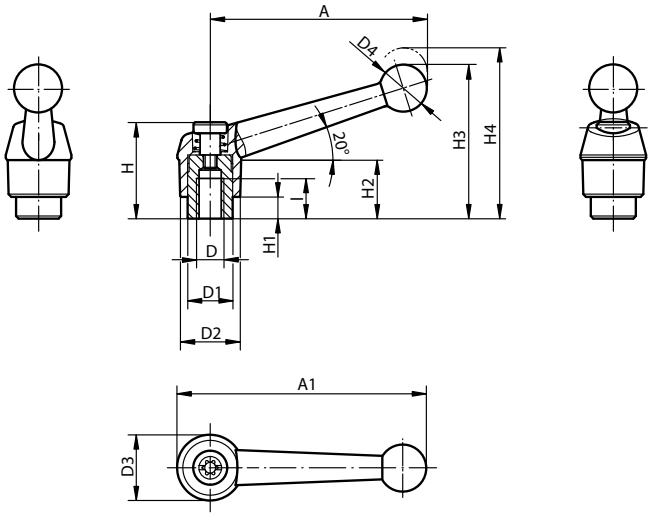

Disengage by lifting

Code NE	Code AG	D	l	D1	D2	D3	D4	H	H1	H2	H3	H4	A	A1	Number of teeth	Package (pcs)
KP01161041	**KP01161043**	M4	9	10	13	14	10,5	24,5	4	15	32,5	35,5	39	46	16	1
KP01161051	**KP01161053**	M5	9	10	13	14	10,5	24,5	4	15	32,5	35,5	39	46	16	1
KP01161061	**KP01161063**	M6	9	10	13	14	10,5	24,5	4	15	32,5	35,5	39	46	16	1
KP01162061	**KP01162063**	M6	12	13,5	18	18,5	15,5	28,5	6,5	16,5	45,5	49,5	64	73	20	1
KP01162081	**KP01162083**	M8	12	13,5	18	18,5	15,5	28,5	6,5	16,5	45,5	49,5	64	73	20	1
KP01163081	**KP01163083**	M8	14	16	21	22	17	37	10	23	57,5	61,5	79	90	22	1
KP01163101	**KP01163103**	M10	14	16	21	22	17	37	10	23	57,5	61,5	79	90	22	1
KP01164101	**KP01164103**	M10	17	19	25	26	19	42,5	10	26	67	72	95	108	24	1
KP01164121	**KP01164123**	M12	17	19	25	26	19	42,5	10	26	67	72	95	108	24	1
KP01165121	**KP01165123**	M12	23	23	30	31	22	49	12	32	79	84	110	126	26	1
KP01165161	**KP01165163**	M16	23	23	30	31	22	49	12	32	79	84	110	126	26	1

MATERIAL - FINISH
Grip: ZAMA (Die-cast zinc)
plastic coating
Pin: CI 5.8 (Steel) burnished

COLOUR
NE Satin black
AG Metallic silver

PURCHASE ORDER EXAMPLE
KP01161051X**20** (indicate length "L").

Disengage by lifting

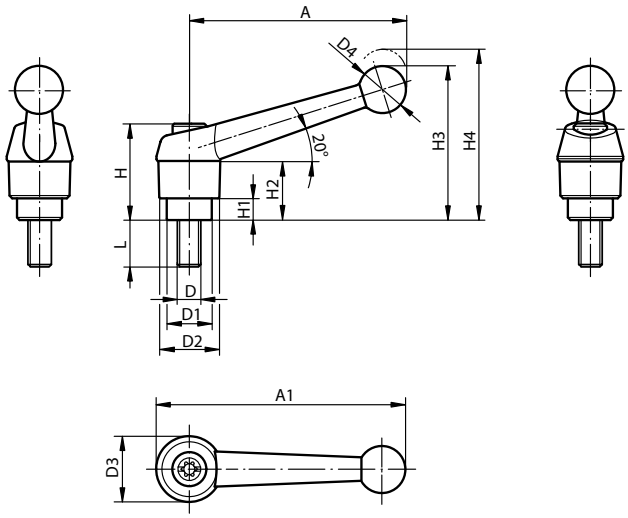

Code NE	Code AG	Version	D	L variable (**)	Package (pcs)
KP01161051X**	**KP01161053X****	1	M5	10/15/20/25/30/35/40/45/50	1
KP01161061X**	**KP01161063X****	1	M6	10/15/20/25/30/35/40/45/50	1
KP01162061X**	**KP01162063X****	2	M6	15/20/25/30/35/40/45/50/55/60	1
KP01162081X**	**KP01162083X****	2	M8	15/20/25/30/35/40/45/50/55/60	1
KP01162101X**	**KP01162103X****	2	M10	15/20/25/30/35/40/45/50/55/60	1
KP01163081X**	**KP01163083X****	3	M8	15/20/25/30/35/40/45/50/55/60	1
KP01163101X**	**KP01163103X****	3	M10	15/20/25/30/35/40/45/50/55/60	1
KP01164101X**	**KP01164103X****	4	M10	20/25/30/35/40/45/50/55/60/70/80/90	1
KP01164121X**	**KP01164123X****	4	M12	20/25/30/35/40/45/50/55/60/70/80/90	1
KP01165121X**	**KP01165123X****	5	M12	25/30/35/40/45/50/55/60/70/80/90	1
KP01165161X**	**KP01165163X****	5	M16	25/30/35/40/45/50/55/60/70/80/90	1

Version	D	D1	D2	D3	D4	H	H1	H2	H3	H4	A	A1	Number of teeth
1	M5/M6	10	13	14	10,5	24,5	4	15	32,5	35,5	39	46	16
2	M6/M8/M10	13,5	18	18,5	15,5	28,5	6,5	16,5	45,5	49,5	64	73	20
3	M8/M10	16	21	22	17	37	10	23	57,5	61,5	79	90	22
4	M10/M12	19	25	26	19	42,5	10	26	67	72	95	108	24
5	M12/M16	23	30	31	22	49	12	32	79	84	110	126	26

20° ADJUSTABLE CLAMPING LEVER

BFC zamak - stainless steel

MATERIAL - FINISH

Grip: ZAMA (Die-cast zinc) plastic coating

Bushing: AISI303 (Stainless steel)

COLOUR

NE Satin black

AG Metallic silver

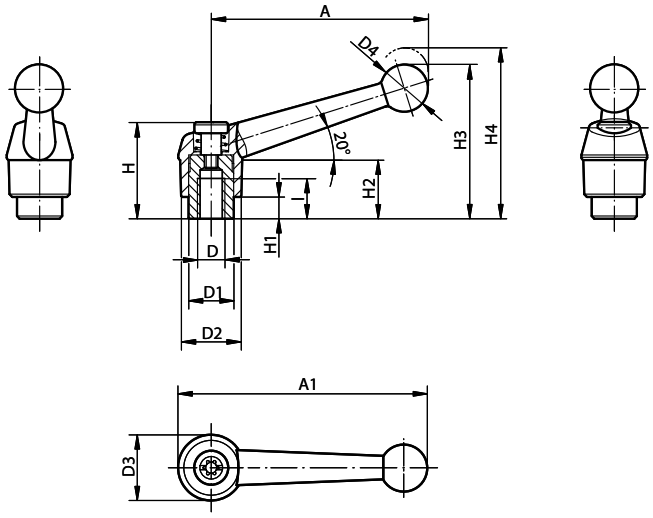

Code NE	Code AG	D	I	D1	D2	D3	D4	H	H1	H2	H3	H4	A	A1	Number of teeth	Package (pcs)
KP01171041	**KP01171043**	M4	9	10	13	14	10,5	24,5	4	15	32,5	35,5	39	46	16	1
KP01171051	**KP01171053**	M5	9	10	13	14	10,5	24,5	4	15	32,5	35,5	39	46	16	1
KP01171061	**KP01171063**	M6	9	10	13	14	10,5	24,5	4	15	32,5	35,5	39	46	16	1
KP01172061	**KP01172063**	M6	12	13,5	18	18,5	15,5	28,5	6,5	16,5	45,5	49,5	64	73	20	1
KP01172081	**KP01172083**	M8	12	13,5	18	18,5	15,5	28,5	6,5	16,5	45,5	49,5	64	73	20	1
KP01173081	**KP01173083**	M8	14	16	21	22	17	37	10	23	57,5	61,5	79	90	22	1
KP01173101	**KP01173103**	M10	14	16	21	22	17	37	10	23	57,5	61,5	79	90	22	1
KP01174101	**KP01174103**	M10	17	19	25	26	19	42,5	10	26	67	72	95	108	24	1
KP01174121	**KP01174123**	M12	17	19	25	26	19	42,5	10	26	67	72	95	108	24	1
KP01175121	**KP01175123**	M12	23	23	30	31	22	49	12	32	79	84	110	126	26	1
KP01175161	**KP01175163**	M16	23	23	30	31	22	49	12	32	79	84	110	126	26	1

MATERIAL - FINISH
Grip: ZAMA (Die-cast zinc) plastic coating
Pin: AISI303 (Stainless steel)

COLOUR
NE Satin black
AG Metallic silver

PURCHASE ORDER EXAMPLE
KP01171051X**20** (indicate length "L").

Disengage by lifting

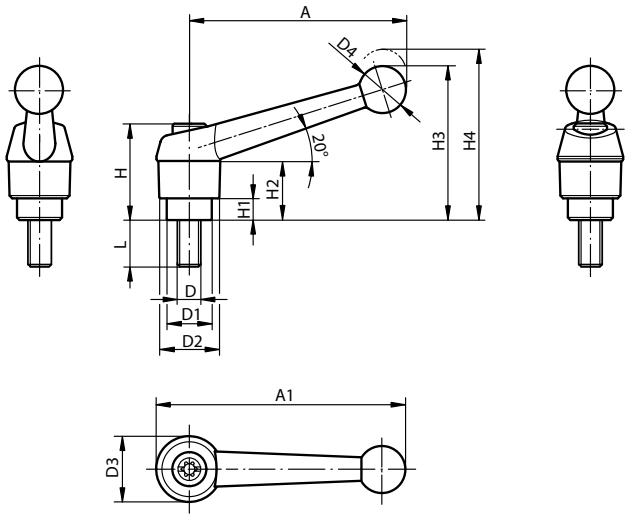

Code NE	Code AG	Version	D	L variable (**)	Package (pcs)
KP01171051X**	**KP01171053X****	1	M5	10/15/20/25	1
KP01171061X**	**KP01171063X****	1	M6	10/15/20/25/30/40/50	1
KP01172061X**	**KP01172063X****	2	M6	15/20/25/30/40/50/60	1
KP01172081X**	**KP01172083X****	2	M8	15/20/25/30/40/50/60	1
KP01172101X**	**KP01172103X****	2	M10	20/25/30/40/50/60	1
KP01173081X**	**KP01173083X****	3	M8	20/25/30/40/50/60	1
KP01173101X**	**KP01173103X****	3	M10	20/25/30/40/50/60	1
KP01174121X**	**KP01174123X****	4	M12	25/30/40/50/60	1
KP01175161X**	**KP01175163X****	5	M16	30/40/50/60	1

Version	D	D1	D2	D3	D4	H	H1	H2	H3	H4	A	A1	Number of teeth
1	M5/M6	10	13	14	10,5	24,5	4	15	32,5	35,5	39	46	16
2	M6/M8/M10	13,5	18	18,5	15,5	28,5	6,5	16,5	45,5	49,5	64	73	20
3	M8/M10	16	21	22	17	37	10	23	57,5	61,5	79	90	22
4	M12	19	25	26	19	42,5	10	26	67	72	95	108	24
5	M16	23	30	31	22	49	12	32	79	84	110	126	26

ADJUSTABLE CLAMPING LEVER

BFC zamak - steel

MATERIAL - FINISH

Grip: ZAMA (Die-cast zinc) plastic coating

Bushing: Cl 5.8 (Steel) burnished

COLOUR

- NE Satin black
- A4 Orange RAL 2004
- R3 Red RAL 3003
- AG Metallic silver
- CR Glossy chrome

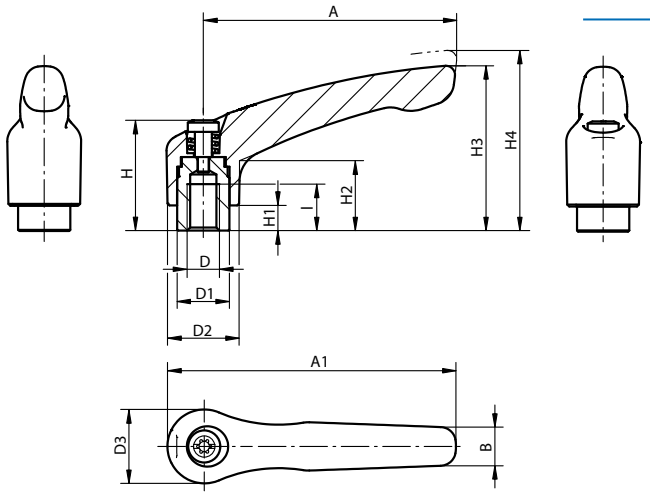

Disengage by lifting

Code	Colour	D	I	D1	D2	D3	H	H1	H2	H3	H4	A	A1	B	Number of teeth	Package (pcs)
KP01220031	NE	M3	9	10	13	14	24,5	4	14,5	30	33	30	37	7	16	1
KP01220032	A4	M3	9	10	13	14	24,5	4	14,5	30	33	30	37	7	16	1
KP012200327	R3	M3	9	10	13	14	24,5	4	14,5	30	33	30	37	7	16	1
KP01220033	AG	M3	9	10	13	14	24,5	4	14,5	30	33	30	37	7	16	1
KP01220036	CR	M3	9	10	13	14	24,5	4	14,5	30	33	30	37	7	16	1
KP01220041	NE	M4	9	10	13	14	24,5	4	14,5	30	33	30	37	7	16	1
KP01220042	A4	M4	9	10	13	14	24,5	4	14,5	30	33	30	37	7	16	1
KP012200427	R3	M4	9	10	13	14	24,5	4	14,5	30	33	30	37	7	16	1
KP01220043	AG	M4	9	10	13	14	24,5	4	14,5	30	33	30	37	7	16	1
KP01220046	CR	M4	9	10	13	14	24,5	4	14,5	30	33	30	37	7	16	1
KP01220051	NE	M5	9	10	13	14	24,5	4	14,5	30	33	30	37	7	16	1
KP01220052	A4	M5	9	10	13	14	24,5	4	14,5	30	33	30	37	7	16	1
KP012200527	R3	M5	9	10	13	14	24,5	4	14,5	30	33	30	37	7	16	1
KP01220053	AG	M5	9	10	13	14	24,5	4	14,5	30	33	30	37	7	16	1
KP01220056	CR	M5	9	10	13	14	24,5	4	14,5	30	33	30	37	7	16	1
KP01221041	NE	M4	9	10	13	14	24,5	4	14,5	31	34	40	47	7	16	1
KP01221042	A4	M4	9	10	13	14	24,5	4	14,5	31	34	40	47	7	16	1
KP012210427	R3	M4	9	10	13	14	24,5	4	14,5	31	34	40	47	7	16	1
KP01221043	AG	M4	9	10	13	14	24,5	4	14,5	31	34	40	47	7	16	1
KP01221046	CR	M4	9	10	13	14	24,5	4	14,5	31	34	40	47	7	16	1
KP01221051	NE	M5	9	10	13	14	24,5	4	14,5	31	34	40	47	7	16	1
KP01221052	A4	M5	9	10	13	14	24,5	4	14,5	31	34	40	47	7	16	1
KP012210527	R3	M5	9	10	13	14	24,5	4	14,5	31	34	40	47	7	16	1
KP01221053	AG	M5	9	10	13	14	24,5	4	14,5	31	34	40	47	7	16	1
KP01221056	CR	M5	9	10	13	14	24,5	4	14,5	31	34	40	47	7	16	1
KP01221061	NE	M6	9	10	13	14	24,5	4	14,5	31	34	40	47	7	16	1
KP01221062	A4	M6	9	10	13	14	24,5	4	14,5	31	34	40	47	7	16	1
KP012210627	R3	M6	9	10	13	14	24,5	4	14,5	31	34	40	47	7	16	1
KP01221063	AG	M6	9	10	13	14	24,5	4	14,5	31	34	40	47	7	16	1
KP01221066	CR	M6	9	10	13	14	24,5	4	14,5	31	34	40	47	7	16	1
KP01222061	NE	M6	12	13,5	18,5	19	28,5	6,5	17,5	42,5	45,5	65	74,5	9,5	20	1
KP01222062	A4	M6	12	13,5	18,5	19	28,5	6,5	17,5	42,5	45,5	65	74,5	9,5	20	1
KP012220627	R3	M6	12	13,5	18,5	19	28,5	6,5	17,5	42,5	45,5	65	74,5	9,5	20	1
KP01222063	AG	M6	12	13,5	18,5	19	28,5	6,5	17,5	42,5	45,5	65	74,5	9,5	20	1
KP01222066	CR	M6	12	13,5	18,5	19	28,5	6,5	17,5	42,5	45,5	65	74,5	9,5	20	1

MATERIAL - FINISH
Grip: ZAMA (Die-cast zinc) plastic coating
Bushing: CI 5.8 (Steel) burnished

COLOUR
NE Satin black
A4 Orange RAL 2004
R3 Red RAL 3003
AG Metallic silver
CR Glossy chrome

Disengage by lifting

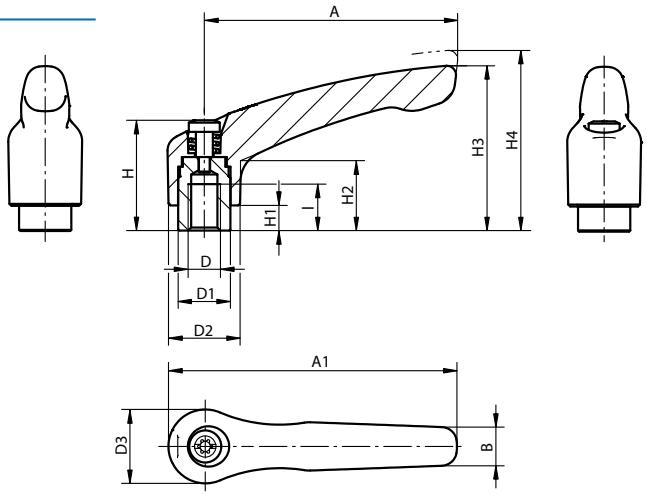

Code	Colour	D	l	D1	D2	D3	H	H1	H2	H3	H4	A	A1	B	Number of teeth	Package (pcs)
KP01222081	NE	M8	12	13,5	18,5	19	28,5	6,5	17,5	42,5	45,5	65	74,5	9,5	20	1
KP01222082	A4	M8	12	13,5	18,5	19	28,5	6,5	17,5	42,5	45,5	65	74,5	9,5	20	1
KP012220827	R3	M8	12	13,5	18,5	19	28,5	6,5	17,5	42,5	45,5	65	74,5	9,5	20	1
KP01222083	AG	M8	12	13,5	18,5	19	28,5	6,5	17,5	42,5	45,5	65	74,5	9,5	20	1
KP01222086	CR	M8	12	13,5	18,5	19	28,5	6,5	17,5	42,5	45,5	65	74,5	9,5	20	1
KP01223081	NE	M8	14	16	21	22	37	10	24	54,5	58,5	80	91	11	22	1
KP01223082	A4	M8	14	16	21	22	37	10	24	54,5	58,5	80	91	11	22	1
KP012230827	R3	M8	14	16	21	22	37	10	24	54,5	58,5	80	91	11	22	1
KP01223083	AG	M8	14	16	21	22	37	10	24	54,5	58,5	80	91	11	22	1
KP01223086	CR	M8	14	16	21	22	37	10	24	54,5	58,5	80	91	11	22	1
KP01223101	NE	M10	14	16	21	22	37	10	24	54,5	58,5	80	91	11	22	1
KP01223102	A4	M10	14	16	21	22	37	10	24	54,5	58,5	80	91	11	22	1
KP012231027	R3	M10	14	16	21	22	37	10	24	54,5	58,5	80	91	11	22	1
KP01223103	AG	M10	14	16	21	22	37	10	24	54,5	58,5	80	91	11	22	1
KP01223106	CR	M10	14	16	21	22	37	10	24	54,5	58,5	80	91	11	22	1
KP01224101	NE	M10	17	19	27	27,5	43	10	27	63	67,5	95	109	13	24	1
KP01224102	A4	M10	17	19	27	27,5	43	10	27	63	67,5	95	109	13	24	1
KP012241027	R3	M10	17	19	27	27,5	43	10	27	63	67,5	95	109	13	24	1
KP01224103	AG	M10	17	19	27	27,5	43	10	27	63	67,5	95	109	13	24	1
KP01224106	CR	M10	17	19	27	27,5	43	10	27	63	67,5	95	109	13	24	1
KP01224121	NE	M12	17	19	27	27,5	43	10	27	63	67,5	95	109	13	24	1
KP01224122	A4	M12	17	19	27	27,5	43	10	27	63	67,5	95	109	13	24	1
KP012241227	R3	M12	17	19	27	27,5	43	10	27	63	67,5	95	109	13	24	1
KP01224123	AG	M12	17	19	27	27,5	43	10	27	63	67,5	95	109	13	24	1
KP01224126	CR	M12	17	19	27	27,5	43	10	27	63	67,5	95	109	13	24	1
KP01225121	NE	M12	23	23	31	32	49	12	31,5	73	77,5	110	126	15	26	1
KP01225122	A4	M12	23	23	31	32	49	12	31,5	73	77,5	110	126	15	26	1
KP012251227	R3	M12	23	23	31	32	49	12	31,5	73	77,5	110	126	15	26	1
KP01225123	AG	M12	23	23	31	32	49	12	31,5	73	77,5	110	126	15	26	1
KP01225126	CR	M12	23	23	31	32	49	12	31,5	73	77,5	110	126	15	26	1
KP01225161	NE	M16	23	23	31	32	49	12	31,5	73	77,5	110	126	15	26	1
KP01225162	A4	M16	23	23	31	32	49	12	31,5	73	77,5	110	126	15	26	1
KP012251627	R3	M16	23	23	31	32	49	12	31,5	73	77,5	110	126	15	26	1
KP01225163	AG	M16	23	23	31	32	49	12	31,5	73	77,5	110	126	15	26	1
KP01225166	CR	M16	23	23	31	32	49	12	31,5	73	77,5	110	126	15	26	1

ADJUSTABLE CLAMPING LEVER

stud zamak - steel

MATERIAL - FINISH

Grip: ZAMA (Zincopressofuso) rivestimento plastico

Pin: Cl 5.8 (Acciaio) brunito

COLOUR

NE Satin black
A4 Orange RAL 2004
R3 Red RAL 3003
AG Metallic silver
CR Glossy chrome

PURCHASE ORDER EXAMPLE

KP01220041X**10** (indicate length "L").

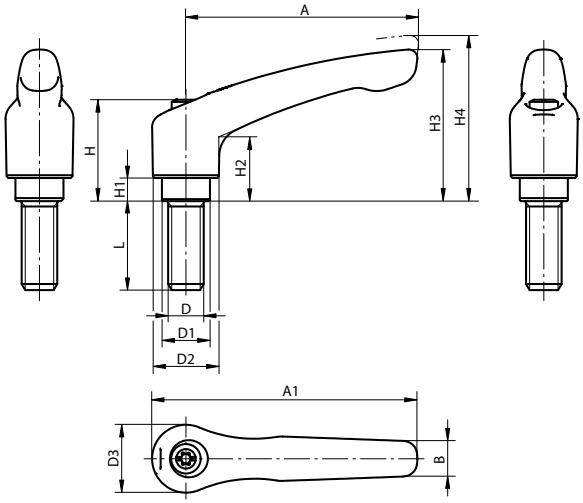

Disengage by lifting

Code	Colour	D	D1	D2	D3	H	H1	H2	H3	H4	A	A1	B	L variable (**)	Number of teeth	Pkg. (pcs)
KP01220041X**	NE	M4	10	13	14	24,5	4	14,5	30	33	30	37	7	10/15/20/25/30/35/40/45/50	16	1
KP01220042X**	A4	M4	10	13	14	24,5	4	14,5	30	33	30	37	7	10/15/20/25/30/35/40/45/50	16	1
KP012200427X**	R3	M4	10	13	14	24,5	4	14,5	30	33	30	37	7	10/15/20/25/30/35/40/45/50	16	1
KP01220043X**	AG	M4	10	13	14	24,5	4	14,5	30	33	30	37	7	10/15/20/25/30/35/40/45/50	16	1
KP01220046X**	CR	M4	10	13	14	24,5	4	14,5	30	33	30	37	7	10/15/20/25/30/35/40/45/50	16	1
KP01220051X**	NE	M5	10	13	14	24,5	4	14,5	30	33	30	37	7	10/15/20/25/30/35/40/45/50	16	1
KP01220052X**	A4	M5	10	13	14	24,5	4	14,5	30	33	30	37	7	10/15/20/25/30/35/40/45/50	16	1
KP012200527X**	R3	M5	10	13	14	24,5	4	14,5	30	33	30	37	7	10/15/20/25/30/35/40/45/50	16	1
KP01220053X**	AG	M5	10	13	14	24,5	4	14,5	30	33	30	37	7	10/15/20/25/30/35/40/45/50	16	1
KP01220056X**	CR	M5	10	13	14	24,5	4	14,5	30	33	30	37	7	10/15/20/25/30/35/40/45/50	16	1
KP01221051X**	NE	M5	10	13	14	24,5	4	14,5	31	34	40	47	7	10/15/20/25/30/35/40/45/50	16	1
KP01221052X**	A4	M5	10	13	14	24,5	4	14,5	31	34	40	47	7	10/15/20/25/30/35/40/45/50	16	1
KP012210527X**	R3	M5	10	13	14	24,5	4	14,5	31	34	40	47	7	10/15/20/25/30/35/40/45/50	16	1
KP01221053X**	AG	M5	10	13	14	24,5	4	14,5	31	34	40	47	7	10/15/20/25/30/35/40/45/50	16	1
KP01221056X**	CR	M5	10	13	14	24,5	4	14,5	31	34	40	47	7	10/15/20/25/30/35/40/45/50	16	1
KP01221061X**	NE	M6	10	13	14	24,5	4	14,5	31	34	40	47	7	10/15/20/25/30/35/40/45/50	16	1
KP01221062X**	A4	M6	10	13	14	24,5	4	14,5	31	34	40	47	7	10/15/20/25/30/35/40/45/50	16	1
KP012210627X**	R3	M6	10	13	14	24,5	4	14,5	31	34	40	47	7	10/15/20/25/30/35/40/45/50	16	1
KP01221063X**	AG	M6	10	13	14	24,5	4	14,5	31	34	40	47	7	10/15/20/25/30/35/40/45/50	16	1
KP01221066X**	CR	M6	10	13	14	24,5	4	14,5	31	34	40	47	7	10/15/20/25/30/35/40/45/50	16	1
KP01222061X**	NE	M6	13,5	18,5	19	28,5	6,5	17,5	42,5	45,5	65	74,5	9,5	15/20/25/30/35/40/45/50/55/60	20	1
KP01222062X**	A4	M6	13,5	18,5	19	28,5	6,5	17,5	42,5	45,5	65	74,5	9,5	15/20/25/30/35/40/45/50/55/60	20	1
KP012220627X**	R3	M6	13,5	18,5	19	28,5	6,5	17,5	42,5	45,5	65	74,5	9,5	15/20/25/30/35/40/45/50/55/60	20	1
KP01222063X**	AG	M6	13,5	18,5	19	28,5	6,5	17,5	42,5	45,5	65	74,5	9,5	15/20/25/30/35/40/45/50/55/60	20	1
KP01222066X**	CR	M6	13,5	18,5	19	28,5	6,5	17,5	42,5	45,5	65	74,5	9,5	15/20/25/30/35/40/45/50/55/60	20	1
KP01222081X**	NE	M8	13,5	18,5	19	28,5	6,5	17,5	42,5	45,5	65	74,5	9,5	15/20/25/30/35/40/45/50/55/60	20	1
KP01222082X**	A4	M8	13,5	18,5	19	28,5	6,5	17,5	42,5	45,5	65	74,5	9,5	15/20/25/30/35/40/45/50/55/60	20	1
KP012220827X**	R3	M8	13,5	18,5	19	28,5	6,5	17,5	42,5	45,5	65	74,5	9,5	15/20/25/30/35/40/45/50/55/60	20	1
KP01222083X**	AG	M8	13,5	18,5	19	28,5	6,5	17,5	42,5	45,5	65	74,5	9,5	15/20/25/30/35/40/45/50/55/60	20	1
KP01222086X**	CR	M8	13,5	18,5	19	28,5	6,5	17,5	42,5	45,5	65	74,5	9,5	15/20/25/30/35/40/45/50/55/60	20	1
KP01222101X**	NE	M10	13,5	18,5	19	28,5	6,5	17,5	42,5	45,5	65	74,5	9,5	15/20/25/30/35/40/45/50/55/60	20	1
KP01222102X**	A4	M10	13,5	18,5	19	28,5	6,5	17,5	42,5	45,5	65	74,5	9,5	15/20/25/30/35/40/45/50/55/60	20	1
KP012221027X**	R3	M10	13,5	18,5	19	28,5	6,5	17,5	42,5	45,5	65	74,5	9,5	15/20/25/30/35/40/45/50/55/60	20	1

MATERIAL - FINISH

Grip: ZAMA (Zincopressofuso) rivestimento plastico
Pin: CI 5.8 (Acciaio) brunito

COLOUR

NE Satin black
A4 Orange RAL 2004
R3 Red RAL 3003
AG Metallic silver
CR Glossy chrome

PURCHASE ORDER EXAMPLE

KP01220041X**10** (indicate length "L").

Disengage by lifting

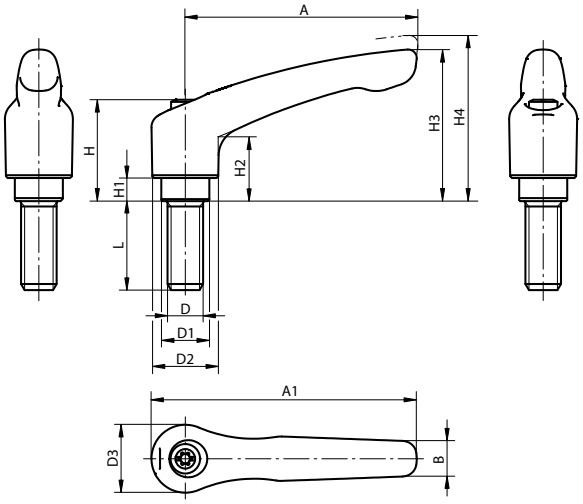

Code	Colour	D	D1	D2	D3	H	H1	H2	H3	H4	A	A1	B	L variable (**)	Number of teeth	Pkg. (pcs)
KP01222103X**	AG	M10	13,5	18,5	19	28,5	6,5	17,5	42,5	45,5	65	74,5	9,5	15/20/25/30/35/40/45/50/55/60	20	1
KP01222106X**	CR	M10	13,5	18,5	19	28,5	6,5	17,5	42,5	45,5	65	74,5	9,5	15/20/25/30/35/40/45/50/55/60	20	1
KP01223081X**	NE	M8	16	21	22	37	10	24	54,5	58,5	80	91	11	15/20/25/30/35/40/45/50/55/60	22	1
KP01223082X**	A4	M8	16	21	22	37	10	24	54,5	58,5	80	91	11	15/20/25/30/35/40/45/50/55/60	22	1
KP012230827X**	R3	M8	16	21	22	37	10	24	54,5	58,5	80	91	11	15/20/25/30/35/40/45/50/55/60	22	1
KP01223083X**	AG	M8	16	21	22	37	10	24	54,5	58,5	80	91	11	15/20/25/30/35/40/45/50/55/60	22	1
KP01223086X**	CR	M8	16	21	22	37	10	24	54,5	58,5	80	91	11	15/20/25/30/35/40/45/50/55/60	22	1
KP01223101X**	NE	M10	16	21	22	37	10	24	54,5	58,5	80	91	11	15/20/25/30/35/40/45/50/55/60	22	1
KP01223102X**	A4	M10	16	21	22	37	10	24	54,5	58,5	80	91	11	15/20/25/30/35/40/45/50/55/60	22	1
KP012231027X**	R3	M10	16	21	22	37	10	24	54,5	58,5	80	91	11	15/20/25/30/35/40/45/50/55/60	22	1
KP01223103X**	AG	M10	16	21	22	37	10	24	54,5	58,5	80	91	11	15/20/25/30/35/40/45/50/55/60	22	1
KP01223106X**	CR	M10	16	21	22	37	10	24	54,5	58,5	80	91	11	15/20/25/30/35/40/45/50/55/60	22	1
KP01224101X**	NE	M10	19	27	27,5	43	10	27	63	67,5	95	109	13	20/25/30/35/40/45/50/55/60/70/80/90	24	1
KP01224102X**	A4	M10	19	27	27,5	43	10	27	63	67,5	95	109	13	20/25/30/35/40/45/50/55/60/70/80/90	24	1
KP012241027X**	R3	M10	19	27	27,5	43	10	27	63	67,5	95	109	13	20/25/30/35/40/45/50/55/60/70/80/90	24	1
KP01224103X**	AG	M10	19	27	27,5	43	10	27	63	67,5	95	109	13	20/25/30/35/40/45/50/55/60/70/80/90	24	1
KP01224106X**	CR	M10	19	27	27,5	43	10	27	63	67,5	95	109	13	20/25/30/35/40/45/50/55/60/70/80/90	24	1
KP01224121X**	NE	M12	19	27	27,5	43	10	27	63	67,5	95	109	13	20/25/30/35/40/45/50/55/60/70/80/90	24	1
KP01224122X**	A4	M12	19	27	27,5	43	10	27	63	67,5	95	109	13	20/25/30/35/40/45/50/55/60/70/80/90	24	1
KP012241227X**	R3	M12	19	27	27,5	43	10	27	63	67,5	95	109	13	20/25/30/35/40/45/50/55/60/70/80/90	24	1
KP01224123X**	AG	M12	19	27	27,5	43	10	27	63	67,5	95	109	13	20/25/30/35/40/45/50/55/60/70/80/90	24	1
KP01224126X**	CR	M12	19	27	27,5	43	10	27	63	67,5	95	109	13	20/25/30/35/40/45/50/55/60/70/80/90	24	1
KP01225121X**	NE	M12	23	31	32	49	12	31,5	73	77,5	110	126	15	25/30/35/40/45/50/55/60/70/80/90	26	1
KP01225122X**	A4	M12	23	31	32	49	12	31,5	73	77,5	110	126	15	25/30/35/40/45/50/55/60/70/80/90	26	1
KP012251227X**	R3	M12	23	31	32	49	12	31,5	73	77,5	110	126	15	25/30/35/40/45/50/55/60/70/80/90	26	1
KP01225123X**	AG	M12	23	31	32	49	12	31,5	73	77,5	110	126	15	25/30/35/40/45/50/55/60/70/80/90	26	1
KP01225126X**	CR	M12	23	31	32	49	12	31,5	73	77,5	110	126	15	25/30/35/40/45/50/55/60/70/80/90	26	1
KP01225161X**	NE	M16	23	31	32	49	12	31,5	73	77,5	110	126	15	25/30/35/40/45/50/55/60/70/80/90	26	1
KP01225162X**	A4	M16	23	31	32	49	12	31,5	73	77,5	110	126	15	25/30/35/40/45/50/55/60/70/80/90	26	1
KP012251627X**	R3	M16	23	31	32	49	12	31,5	73	77,5	110	126	15	25/30/35/40/45/50/55/60/70/80/90	26	1
KP01225163X**	AG	M16	23	31	32	49	12	31,5	73	77,5	110	126	15	25/30/35/40/45/50/55/60/70/80/90	26	1
KP01225166X**	CR	M16	23	31	32	49	12	31,5	73	77,5	110	126	15	25/30/35/40/45/50/55/60/70/80/90	26	1

ADJUSTABLE CLAMPING LEVER

BFC zamak - stainless steel

MATERIAL - FINISH

Grip: ZAMA (Die-cast zinc) plastic coating

Bushing: AISI303 (Stainless steel)

COLOUR

NE Satin black
A4 Orange RAL 2004
R3 Red RAL 3003
AG Metallic silver
CR Glossy chrome

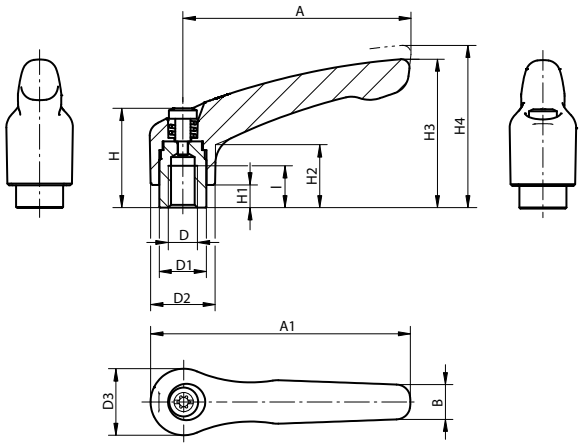

Code	Colour	D	I	D1	D2	D3	H	H1	H2	H3	H4	A	A1	B	Number of teeth	Package (pcs)
KP01230031	NE	M3	9	10	13	14	24,5	4	14,5	30	33	30	37	7	16	1
KP01230032	A4	M3	9	10	13	14	24,5	4	14,5	30	33	30	37	7	16	1
KP012300327	R3	M3	9	10	13	14	24,5	4	14,5	30	33	30	37	7	16	1
KP01230033	AG	M3	9	10	13	14	24,5	4	14,5	30	33	30	37	7	16	1
KP01230036	CR	M3	9	10	13	14	24,5	4	14,5	30	33	30	37	7	16	1
KP01230041	NE	M4	9	10	13	14	24,5	4	14,5	30	33	30	37	7	16	1
KP01230042	A4	M4	9	10	13	14	24,5	4	14,5	30	33	30	37	7	16	1
KP012300427	R3	M4	9	10	13	14	24,5	4	14,5	30	33	30	37	7	16	1
KP01230043	AG	M4	9	10	13	14	24,5	4	14,5	30	33	30	37	7	16	1
KP01230046	CR	M4	9	10	13	14	24,5	4	14,5	30	33	30	37	7	16	1
KP01230051	NE	M5	9	10	13	14	24,5	4	14,5	30	33	30	37	7	16	1
KP01230052	A4	M5	9	10	13	14	24,5	4	14,5	30	33	30	37	7	16	1
KP012300527	R3	M5	9	10	13	14	24,5	4	14,5	30	33	30	37	7	16	1
KP01230053	AG	M5	9	10	13	14	24,5	4	14,5	30	33	30	37	7	16	1
KP01230056	CR	M5	9	10	13	14	24,5	4	14,5	30	33	30	37	7	16	1
KP01231041	NE	M4	9	10	13	14	24,5	4	14,5	31	34	40	47	7	16	1
KP01231042	A4	M4	9	10	13	14	24,5	4	14,5	31	34	40	47	7	16	1
KP012310427	R3	M4	9	10	13	14	24,5	4	14,5	31	34	40	47	7	16	1
KP01231043	AG	M4	9	10	13	14	24,5	4	14,5	31	34	40	47	7	16	1
KP01231046	CR	M4	9	10	13	14	24,5	4	14,5	31	34	40	47	7	16	1
KP01231051	NE	M5	9	10	13	14	24,5	4	14,5	31	34	40	47	7	16	1
KP01231052	A4	M5	9	10	13	14	24,5	4	14,5	31	34	40	47	7	16	1
KP012310527	R3	M5	9	10	13	14	24,5	4	14,5	31	34	40	47	7	16	1
KP01231053	AG	M5	9	10	13	14	24,5	4	14,5	31	34	40	47	7	16	1
KP01231056	CR	M5	9	10	13	14	24,5	4	14,5	31	34	40	47	7	16	1
KP01231061	NE	M6	9	10	13	14	24,5	4	14,5	31	34	40	47	7	16	1
KP01231062	A4	M6	9	10	13	14	24,5	4	14,5	31	34	40	47	7	16	1
KP012310627	R3	M6	9	10	13	14	24,5	4	14,5	31	34	40	47	7	16	1
KP01231063	AG	M6	9	10	13	14	24,5	4	14,5	31	34	40	47	7	16	1
KP01231066	CR	M6	9	10	13	14	24,5	4	14,5	31	34	40	47	7	16	1
KP01232061	NE	M6	12	13,5	18,5	19	28,5	6,5	17,5	42,5	45,5	65	74,5	9,5	20	1
KP01232062	A4	M6	12	13,5	18,5	19	28,5	6,5	17,5	42,5	45,5	65	74,5	9,5	20	1
KP012320627	R3	M6	12	13,5	18,5	19	28,5	6,5	17,5	42,5	45,5	65	74,5	9,5	20	1
KP01232063	AG	M6	12	13,5	18,5	19	28,5	6,5	17,5	42,5	45,5	65	74,5	9,5	20	1
KP01232066	CR	M6	12	13,5	18,5	19	28,5	6,5	17,5	42,5	45,5	65	74,5	9,5	20	1

MATERIAL - FINISH
Grip: ZAMA (Die-cast zinc) plastic coating
Bushing: AISI303 (Stainless steel)

COLOUR
NE Satin black
A4 Orange RAL 2004
R3 Red RAL 3003
AG Metallic silver
CR Glossy chrome

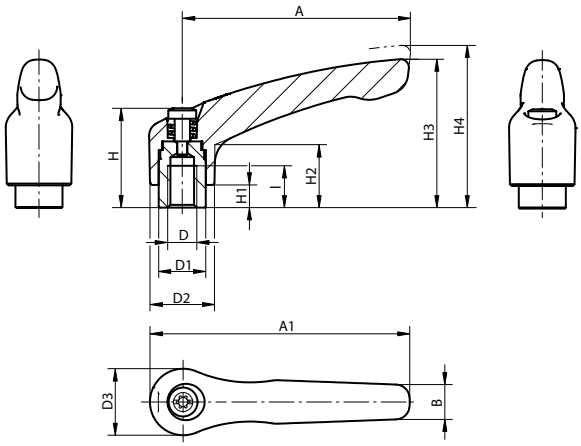

Code	Colour	D	I	D1	D2	D3	H	H1	H2	H3	H4	A	A1	B	Number of teeth	Package (pcs)
KP01232081	NE	M8	12	13,5	18,5	19	28,5	6,5	17,5	42,5	45,5	65	74,5	9,5	20	1
KP01232082	A4	M8	12	13,5	18,5	19	28,5	6,5	17,5	42,5	45,5	65	74,5	9,5	20	1
KP012320827	R3	M8	12	13,5	18,5	19	28,5	6,5	17,5	42,5	45,5	65	74,5	9,5	20	1
KP01232083	AG	M8	12	13,5	18,5	19	28,5	6,5	17,5	42,5	45,5	65	74,5	9,5	20	1
KP01232086	CR	M8	12	13,5	18,5	19	28,5	6,5	17,5	42,5	45,5	65	74,5	9,5	20	1
KP01233081	NE	M8	14	16	21	22	37	10	24	54,5	58,5	80	91	11	22	1
KP01233082	A4	M8	14	16	21	22	37	10	24	54,5	58,5	80	91	11	22	1
KP012330827	R3	M8	14	16	21	22	37	10	24	54,5	58,5	80	91	11	22	1
KP01233083	AG	M8	14	16	21	22	37	10	24	54,5	58,5	80	91	11	22	1
KP01233086	CR	M8	14	16	21	22	37	10	24	54,5	58,5	80	91	11	22	1
KP01233101	NE	M10	14	16	21	22	37	10	24	54,5	58,5	80	91	11	22	1
KP01233102	A4	M10	14	16	21	22	37	10	24	54,5	58,5	80	91	11	22	1
KP012331027	R3	M10	14	16	21	22	37	10	24	54,5	58,5	80	91	11	22	1
KP01233103	AG	M10	14	16	21	22	37	10	24	54,5	58,5	80	91	11	22	1
KP01233106	CR	M10	14	16	21	22	37	10	24	54,5	58,5	80	91	11	22	1
KP01234101	NE	M10	17	19	27	27,5	43	10	27	63	67,5	95	109	13	24	1
KP01234102	A4	M10	17	19	27	27,5	43	10	27	63	67,5	95	109	13	24	1
KP012341027	R3	M10	17	19	27	27,5	43	10	27	63	67,5	95	109	13	24	1
KP01234103	AG	M10	17	19	27	27,5	43	10	27	63	67,5	95	109	13	24	1
KP01234106	CR	M10	17	19	27	27,5	43	10	27	63	67,5	95	109	13	24	1
KP01234121	NE	M12	17	19	27	27,5	43	10	27	63	67,5	95	109	13	24	1
KP01234122	A4	M12	17	19	27	27,5	43	10	27	63	67,5	95	109	13	24	1
KP012341227	R3	M12	17	19	27	27,5	43	10	27	63	67,5	95	109	13	24	1
KP01234123	AG	M12	17	19	27	27,5	43	10	27	63	67,5	95	109	13	24	1
KP01234126	CR	M12	17	19	27	27,5	43	10	27	63	67,5	95	109	13	24	1
KP01235121	NE	M12	23	23	31	32	49	12	31,5	73	77,5	110	126	15	26	1
KP01235122	A4	M12	23	23	31	32	49	12	31,5	73	77,5	110	126	15	26	1
KP012351227	R3	M12	23	23	31	32	49	12	31,5	73	77,5	110	126	15	26	1
KP01235123	AG	M12	23	23	31	32	49	12	31,5	73	77,5	110	126	15	26	1
KP01235126	CR	M12	23	23	31	32	49	12	31,5	73	77,5	110	126	15	26	1
KP01235161	NE	M16	23	23	31	32	49	12	31,5	73	77,5	110	126	15	26	1
KP01235162	A4	M16	23	23	31	32	49	12	31,5	73	77,5	110	126	15	26	1
KP012351627	R3	M16	23	23	31	32	49	12	31,5	73	77,5	110	126	15	26	1
KP01235163	AG	M16	23	23	31	32	49	12	31,5	73	77,5	110	126	15	26	1
KP01235166	CR	M16	23	23	31	32	49	12	31,5	73	77,5	110	126	15	26	1

ADJUSTABLE CLAMPING LEVER

stud zamak - stainless steel

MATERIAL - FINISH

Grip: ZAMA (Die-cast zinc) plastic coating

Pin: AISI303 (Stainless steel)

COLOUR

NE Satin black
A4 Orange RAL 2004
R3 Red RAL 3003
AG Metallic silver
CR Glossy chrome

PURCHASE ORDER EXAMPLE

KP0123004X**10** (indicate length "L").

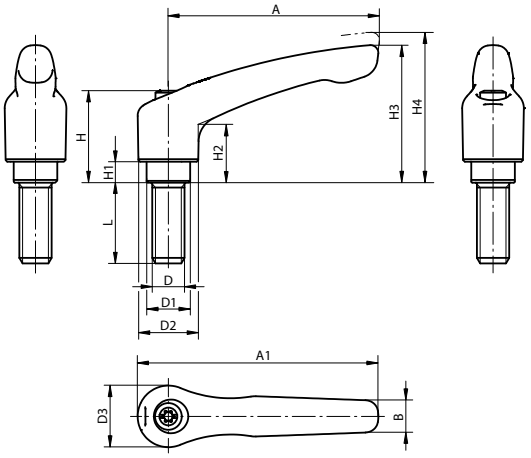

Disengage by lifting

Code	Colour	D	D1	D2	D3	H	H1	H2	H3	H4	A	A1	B	L variable (**)	Number of teeth	Pkg. (pcs)
KP01230041X**	NE	M4	10	13	14	24,5	4	14,5	30	33	30	37	7	10/15/20/25	16	1
KP01230042X**	A4	M4	10	13	14	24,5	4	14,5	30	33	30	37	7	10/15/20/25	16	1
KP012300427X**	R3	M4	10	13	14	24,5	4	14,5	30	33	30	37	7	10/15/20/25	16	1
KP01230043X**	AG	M4	10	13	14	24,5	4	14,5	30	33	30	37	7	10/15/20/25	16	1
KP01230046X**	CR	M4	10	13	14	24,5	4	14,5	30	33	30	37	7	10/15/20/25	16	1
KP01230051X**	NE	M5	10	13	14	24,5	4	14,5	30	33	30	37	7	10/15/20/25	16	1
KP01230052X**	A4	M5	10	13	14	24,5	4	14,5	30	33	30	37	7	10/15/20/25	16	1
KP012300527X**	R3	M5	10	13	14	24,5	4	14,5	30	33	30	37	7	10/15/20/25	16	1
KP01230053X**	AG	M5	10	13	14	24,5	4	14,5	30	33	30	37	7	10/15/20/25	16	1
KP01230056X**	CR	M5	10	13	14	24,5	4	14,5	30	33	30	37	7	10/15/20/25	16	1
KP01231051X**	NE	M5	10	13	14	24,5	4	14,5	31	34	40	47	7	10/15/20/25	16	1
KP01231052X**	A4	M5	10	13	14	24,5	4	14,5	31	34	40	47	7	10/15/20/25	16	1
KP012310527X**	R3	M5	10	13	14	24,5	4	14,5	31	34	40	47	7	10/15/20/25	16	1
KP01231053X**	AG	M5	10	13	14	24,5	4	14,5	31	34	40	47	7	10/15/20/25	16	1
KP01231056X**	CR	M5	10	13	14	24,5	4	14,5	31	34	40	47	7	10/15/20/25	16	1
KP01231061X**	NE	M6	10	13	14	24,5	4	14,5	31	34	40	47	7	10/15/20/25/30/40/50	16	1
KP01231062X**	A4	M6	10	13	14	24,5	4	14,5	31	34	40	47	7	10/15/20/25/30/40/50	16	1
KP012310627X**	R3	M6	10	13	14	24,5	4	14,5	31	34	40	47	7	10/15/20/25/30/40/50	16	1
KP01231063X**	AG	M6	10	13	14	24,5	4	14,5	31	34	40	47	7	10/15/20/25/30/40/50	16	1
KP01231066X**	CR	M6	10	13	14	24,5	4	14,5	31	34	40	47	7	10/15/20/25/30/40/50	16	1
KP01232061X**	NE	M6	13,5	18,5	19	28,5	6,5	17,5	42,5	45,5	65	74,5	9,5	15/20/25/30/40/50/60	20	1
KP01232062X**	A4	M6	13,5	18,5	19	28,5	6,5	17,5	42,5	45,5	65	74,5	9,5	15/20/25/30/40/50/60	20	1
KP012320627X**	R3	M6	13,5	18,5	19	28,5	6,5	17,5	42,5	45,5	65	74,5	9,5	15/20/25/30/40/50/60	20	1
KP01232063X**	AG	M6	13,5	18,5	19	28,5	6,5	17,5	42,5	45,5	65	74,5	9,5	15/20/25/30/40/50/60	20	1
KP01232066X**	CR	M6	13,5	18,5	19	28,5	6,5	17,5	42,5	45,5	65	74,5	9,5	15/20/25/30/40/50/60	20	1
KP01232081X**	NE	M8	13,5	18,5	19	28,5	6,5	17,5	42,5	45,5	65	74,5	9,5	15/20/25/30/40/50/60	20	1
KP01232082X**	A4	M8	13,5	18,5	19	28,5	6,5	17,5	42,5	45,5	65	74,5	9,5	15/20/25/30/40/50/60	20	1
KP012320827X**	R3	M8	13,5	18,5	19	28,5	6,5	17,5	42,5	45,5	65	74,5	9,5	15/20/25/30/40/50/60	20	1
KP01232083X**	AG	M8	13,5	18,5	19	28,5	6,5	17,5	42,5	45,5	65	74,5	9,5	15/20/25/30/40/50/60	20	1
KP01232086X**	CR	M8	13,5	18,5	19	28,5	6,5	17,5	42,5	45,5	65	74,5	9,5	15/20/25/30/40/50/60	20	1
KP01232101X**	NE	M10	13,5	18,5	19	28,5	6,5	17,5	42,5	45,5	65	74,5	9,5	20/25/30/40/50/60	20	1
KP01232102X**	A4	M10	13,5	18,5	19	28,5	6,5	17,5	42,5	45,5	65	74,5	9,5	20/25/30/40/50/60	20	1
KP012321027X**	R3	M10	13,5	18,5	19	28,5	6,5	17,5	42,5	45,5	65	74,5	9,5	20/25/30/40/50/60	20	1
KP01232103X**	AG	M10	13,5	18,5	19	28,5	6,5	17,5	42,5	45,5	65	74,5	9,5	20/25/30/40/50/60	20	1
KP01232106X**	CR	M10	13,5	18,5	19	28,5	6,5	17,5	42,5	45,5	65	74,5	9,5	20/25/30/40/50/60	20	1

MATERIAL - FINISH
Grip: ZAMA (Die-cast zinc)
plastic coating
Pin: AISI303 (Stainless steel)

COLOUR
NE Satin black
A4 Orange RAL 2004
R3 Red RAL 3003
AG Metallic silver
CR Glossy chrome

PURCHASE ORDER EXAMPLE
KP0123004X**10** (indicate length "L").

Disengage
by lifting

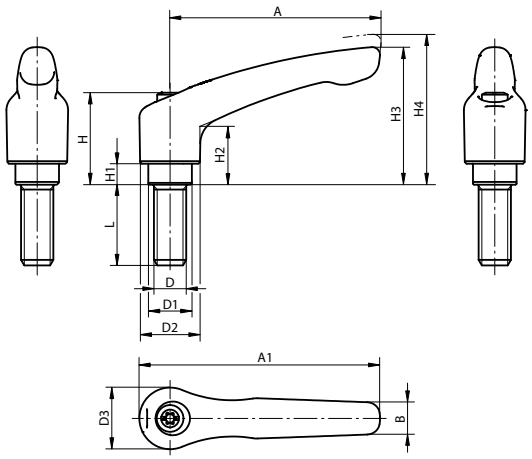

Code	Colour	D	D1	D2	D3	H	H1	H2	H3	H4	A	A1	B	L variable (**)	Number of teeth	Pkg. (pcs)
KP01233081X**	NE	M8	16	21	22	37	10	24	54,5	58,5	80	91	11	20/25/30/40/50/60	22	1
KP01233082X**	A4	M8	16	21	22	37	10	24	54,5	58,5	80	91	11	20/25/30/40/50/60	22	1
KP012330827X**	R3	M8	16	21	22	37	10	24	54,5	58,5	80	91	11	20/25/30/40/50/60	22	1
KP01233083X**	AG	M8	16	21	22	37	10	24	54,5	58,5	80	91	11	20/25/30/40/50/60	22	1
KP01233086X**	CR	M8	16	21	22	37	10	24	54,5	58,5	80	91	11	20/25/30/40/50/60	22	1
KP01233101X**	NE	M10	16	21	22	37	10	24	54,5	58,5	80	91	11	20/25/30/40/50/60	22	1
KP01233102X**	A4	M10	16	21	22	37	10	24	54,5	58,5	80	91	11	20/25/30/40/50/60	22	1
KP012331027X**	R3	M10	16	21	22	37	10	24	54,5	58,5	80	91	11	20/25/30/40/50/60	22	1
KP01233103X**	AG	M10	16	21	22	37	10	24	54,5	58,5	80	91	11	20/25/30/40/50/60	22	1
KP01233106X**	CR	M10	16	21	22	37	10	24	54,5	58,5	80	91	11	20/25/30/40/50/60	22	1
KP01234121X**	NE	M12	19	27	27,5	43	10	27	63	67,5	95	109	13	25/30/40/50/60	24	1
KP01234122X**	A4	M12	19	27	27,5	43	10	27	63	67,5	95	109	13	25/30/40/50/60	24	1
KP012341227X**	R3	M12	19	27	27,5	43	10	27	63	67,5	95	109	13	25/30/40/50/60	24	1
KP01234123X**	AG	M12	19	27	27,5	43	10	27	63	67,5	95	109	13	25/30/40/50/60	24	1
KP01234126X**	CR	M12	19	27	27,5	43	10	27	63	67,5	95	109	13	25/30/40/50/60	24	1
KP01235161X**	NE	M16	23	31	32	49	12	31,5	73	77,5	110	126	15	30/40/50/60	26	1
KP01235162X**	A4	M16	23	31	32	49	12	31,5	73	77,5	110	126	15	30/40/50/60	26	1
KP012351627X**	R3	M16	23	31	32	49	12	31,5	73	77,5	110	126	15	30/40/50/60	26	1
KP01235163X**	AG	M16	23	31	32	49	12	31,5	73	77,5	110	126	15	30/40/50/60	26	1
KP01235166X**	CR	M16	23	31	32	49	12	31,5	73	77,5	110	126	15	30/40/50/60	26	1

FLAT ADJUSTABLE CLAMPING LEVER

BFC zamak - steel

MATERIAL - FINISH

Grip: ZAMA (Die-cast zinc) plastic coating

Bushing: Cl 5.8 (Steel) burnished

COLOUR

NE Satin black

A4 Orange RAL 2004

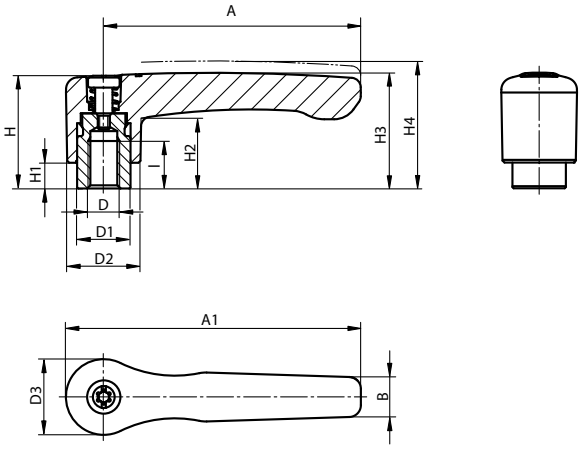

Disengage by lifting

Code NE	Code A4	D	I	D1	D2	D3	H	H1	H2	H3	H4	A	A1	B	Number of teeth	Package (pcs)
KP07372061	**KP07372062**	M6	12	13,5	18,5	19,1	28,5	6,5	17,8	29,2	32,2	65	74,5	10,1	20	1
KP07372081	**KP07372082**	M8	12	13,5	18,5	19,1	28,5	6,5	17,8	29,2	32,2	65	74,5	10,1	20	1
KP07373081	**KP07373082**	M8	14	16	21,2	22	37	10	23,8	38	42	80	91	11,7	22	1
KP07373101	**KP07373102**	M10	14	16	21,2	22	37	10	23,8	38	42	80	91	11,7	22	1

MATERIAL - FINISH
Grip: ZAMA (Die-cast zinc)
plastic coating
Pin: Cl 5.8 (Steel) burnished

COLOUR
NE Satin black
A4 Orange RAL 2004

PURCHASE ORDER EXAMPLE
KP07372061X**15** (indicate length "L").

Disengage
by lifting

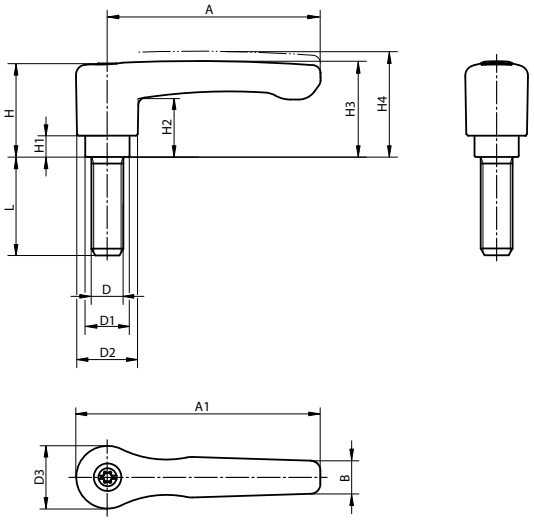

Code NE	Code A4	Versione	D	L variable (**)	Package (pcs)
KP07372061X**	**KP07372062X****	1	M6	15/20/25/30/35/40/45/50/55/60	1
KP07372081X**	**KP07372082X****	1	M8	15/20/25/30/35/40/45/50/55/60	1
KP07372101X**	**KP07372102X****	1	M10	15/20/25/30/35/40/45/50/55/60	1
KP07373081X**	**KP07373082X****	2	M8	15/20/25/30/35/40/45/50/55/60	1
KP07373101X**	**KP07373102X****	2	M10	15/20/25/30/35/40/45/50/55/60	1

Versione	D	D1	D2	D3	H	H1	H2	H3	H4	A	A1	B	Number of teeth
1	M6/M8/M10	13,5	18,5	19,1	28,5	6,5	17,8	29,2	32,2	65	74,5	10,1	20
2	M8/M10	16	21,2	22	37	10	23,8	38	42	80	91	11,7	20

FLAT ADJUSTABLE CLAMPING LEVER

BFC zamak - stainless steel

MATERIAL - FINISH

Grip: ZAMA (Die-cast zinc) plastic coating

Bushing: AISI303 (Stainless steel))

COLOUR

NE Satin black

A4 Orange RAL 2004

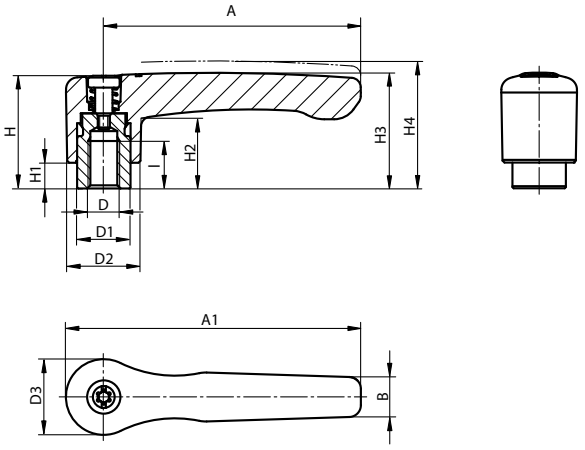

Disengage by lifting

Code NE	Code A4	D	I	D1	D2	D3	H	H1	H2	H3	H4	A	A1	B	Number of teeth	Package (pcs)
KP07382061	**KP07382062**	M6	12	13,5	18,5	19,1	28,5	6,5	17,8	29,2	32,2	65	74,5	10,1	20	1
KP07382081	**KP07382082**	M8	12	13,5	18,5	19,1	28,5	6,5	17,8	29,2	32,2	65	74,5	10,1	20	1
KP07383081	**KP07383082**	M8	14	16	21,2	22	37	10	23,8	38	42	80	91	11,7	22	1
KP07383101	**KP07383102**	M10	14	16	21,2	22	37	10	23,8	38	42	80	91	11,7	22	1

MATERIAL - FINISH
Grip: ZAMA (Die-cast zinc) plastic coating
Pin: AISI303 (Stainless steel)

COLOUR
NE Satin black
A4 Orange RAL 2004

PURCHASE ORDER EXAMPLE
KP07382061X**15** (indicate length "L").

Disengage by lifting

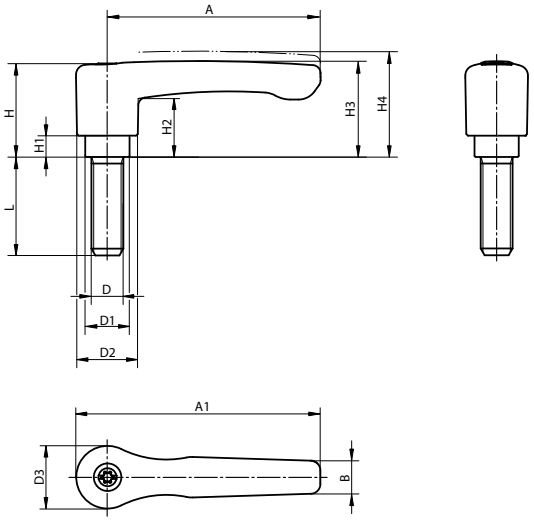

Code NE	Code A4	Versione	D	L variable (**)	Package (pcs)
KP07382061X**	**KP07382062X****	1	M6	15/20/25/30/40/50/60	1
KP07382081X**	**KP07382082X****	1	M8	15/20/25/30/40/50/60	1
KP07382101X**	**KP07382102X****	1	M10	20/25/30/40/50/60	1
KP07383081X**	**KP07383082X****	2	M8	20/25/30/40/50/60	1
KP07383101X**	**KP07383102X****	2	M10	20/25/30/40/50/60	1

Versione	D	D1	D2	D3	H	H1	H2	H3	H4	A	A1	B	Number of teeth
1	M6/M8/M10	13,5	18,5	19,1	28,5	6,5	17,8	29,2	32,2	65	74,5	10,1	20
2	M8/M10	16	21,2	22	37	10	23,8	38	42	80	91	11,7	22

20° ADJUSTABLE CLAMPING LEVER

BFC polyamide - steel

MATERIAL - FINISH

Grip: PA-CV (Glass-filled polyamide) with toothed ring in ZAMA (Die-cast zinc)

Bushing: Cl 5.8 (Steel) burnished

COLOUR

GV Grey RAL 7021
A4 Orange RAL 2004
V2 Green RAL 6032
R2 Red RAL 3020
G1 Yellow RAL 1021
B7 Blue RAL 5017

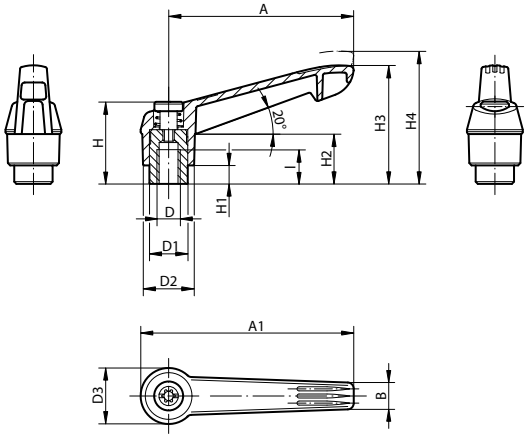

Disengage by lifting

Code	Colour	D	I	D1	D2	D3	H	H1	H2	H3	H4	A	A1	B	Number of teeth	Package (pcs)
KP02691041	GV	M4	9	10	13	14,5	24,5	4	15	30	33,5	40	47	7,5	16	1
KP02691042	A4	M4	9	10	13	14,5	24,5	4	15	30	33,5	40	47	7,5	16	1
KP026910486	V2	M4	9	10	13	14,5	24,5	4	15	30	33,5	40	47	7,5	16	1
KP026910484	R2	M4	9	10	13	14,5	24,5	4	15	30	33,5	40	47	7,5	16	1
KP026910416	G1	M4	9	10	13	14,5	24,5	4	15	30	33,5	40	47	7,5	16	1
KP02691087	B7	M4	9	10	13	14,5	24,5	4	15	30	33,5	40	47	7,5	16	1
KP02691051	GV	M5	9	10	13	14,5	24,5	4	15	30	33,5	40	47	7,5	16	1
KP02691052	A4	M5	9	10	13	14,5	24,5	4	15	30	33,5	40	47	7,5	16	1
KP026910586	V2	M5	9	10	13	14,5	24,5	4	15	30	33,5	40	47	7,5	16	1
KP026910584	R2	M5	9	10	13	14,5	24,5	4	15	30	33,5	40	47	7,5	16	1
KP026910516	G1	M5	9	10	13	14,5	24,5	4	15	30	33,5	40	47	7,5	16	1
KP026910587	B7	M5	9	10	13	14,5	24,5	4	15	30	33,5	40	47	7,5	16	1
KP02691061	GV	M6	9	10	13	14,5	24,5	4	15	30	33,5	40	47	7,5	16	1
KP02691062	A4	M6	9	10	13	14,5	24,5	4	15	30	33,5	40	47	7,5	16	1
KP026910686	V2	M6	9	10	13	14,5	24,5	4	15	30	33,5	40	47	7,5	16	1
KP026910684	R2	M6	9	10	13	14,5	24,5	4	15	30	33,5	40	47	7,5	16	1
KP026910616	G1	M6	9	10	13	14,5	24,5	4	15	30	33,5	40	47	7,5	16	1
KP026910687	B7	M6	9	10	13	14,5	24,5	4	15	30	33,5	40	47	7,5	16	1
KP02692061	GV	M6	12	13,5	18	19,5	28,5	6,5	17,5	41,5	45,5	65	75	9,5	20	1
KP02692062	A4	M6	12	13,5	18	19,5	28,5	6,5	17,5	41,5	45,5	65	75	9,5	20	1
KP026920686	V2	M6	12	13,5	18	19,5	28,5	6,5	17,5	41,5	45,5	65	75	9,5	20	1
KP026920684	R2	M6	12	13,5	18	19,5	28,5	6,5	17,5	41,5	45,5	65	75	9,5	20	1
KP026920616	G1	M6	12	13,5	18	19,5	28,5	6,5	17,5	41,5	45,5	65	75	9,5	20	1
KP026920687	B7	M6	12	13,5	18	19,5	28,5	6,5	17,5	41,5	45,5	65	75	9,5	20	1
KP02692081	GV	M8	12	13,5	18	19,5	28,5	6,5	17,5	41,5	45,5	65	75	9,5	20	1
KP02692082	A4	M8	12	13,5	18	19,5	28,5	6,5	17,5	41,5	45,5	65	75	9,5	20	1
KP026920886	V2	M8	12	13,5	18	19,5	28,5	6,5	17,5	41,5	45,5	65	75	9,5	20	1
KP026920884	R2	M8	12	13,5	18	19,5	28,5	6,5	17,5	41,5	45,5	65	75	9,5	20	1
KP026920816	G1	M8	12	13,5	18	19,5	28,5	6,5	17,5	41,5	45,5	65	75	9,5	20	1
KP026920887	B7	M8	12	13,5	18	19,5	28,5	6,5	17,5	41,5	45,5	65	75	9,5	20	1
KP02693081	GV	M8	14	16	21,5	23	37	10	24	53,5	58	80	91,5	11	22	1
KP02693082	A4	M8	14	16	21,5	23	37	10	24	53,5	58	80	91,5	11	22	1
KP026930886	V2	M8	14	16	21,5	23	37	10	24	53,5	58	80	91,5	11	22	1
KP026930884	R2	M8	14	16	21,5	23	37	10	24	53,5	58	80	91,5	11	22	1
KP026930816	G1	M8	14	16	21,5	23	37	10	24	53,5	58	80	91,5	11	22	1

MATERIAL - FINISH

Grip: PA-CV (Glass-filled polyamide) with toothed ring in ZAMA (Die-cast zinc)

Bushing: CI 5.8 (Steel) burnished

COLOUR

GV Grey RAL 7021
A4 Orange RAL 2004
V2 Green RAL 6032
R2 Red RAL 3020
G1 Yellow RAL 1021
B7 Blue RAL 5017

Disengage by lifting

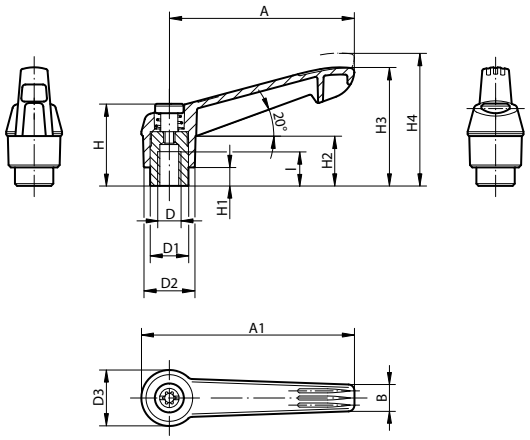

Code	Colour	D	l	D1	D2	D3	H	H1	H2	H3	H4	A	A1	B	Number of teeth	Package (pcs)
KP026930887	B7	M8	14	16	21,5	23	3	10	24	53,5	58	80	91,5	11	22	1
KP02693101	GV	M10	14	16	21,5	23	3	10	24	53,5	58	80	91,5	11	22	1
KP02693102	A4	M10	14	16	21,5	23	3	10	24	53,5	58	80	91,5	11	22	1
KP026931086	V2	M10	14	16	21,5	23	3	10	24	53,5	58	80	91,5	11	22	1
KP026931084	R2	M10	14	16	21,5	23	3	10	24	53,5	58	80	91,5	11	22	1
KP026931016	G1	M10	14	16	21,5	23	3	10	24	53,5	58	80	91,5	11	22	1
KP026931087	B7	M10	14	16	21,5	23	3	10	24	53,5	58	80	91,5	11	22	1
KP02694101	GV	M10	1	19	23,5	2 ,5	43	10	26	61	66	95	109	13	24	1
KP02694102	A4	M10	1	19	23,5	2 ,5	43	10	26	61	66	95	109	13	24	1
KP026941086	V2	M10	1	19	23,5	2 ,5	43	10	26	61	66	95	109	13	24	1
KP026941084	R2	M10	1	19	23,5	2 ,5	43	10	26	61	66	95	109	13	24	1
KP026941016	G1	M10	1	19	23,5	2 ,5	43	10	26	61	66	95	109	13	24	1
KP026941087	B7	M10	1	19	23,5	2 ,5	43	10	26	61	66	95	109	13	24	1
KP02694121	GV	M12	1	19	23,5	2 ,5	43	10	26	61	66	95	109	13	24	1
KP02694122	A4	M12	1	19	23,5	2 ,5	43	10	26	61	66	95	109	13	24	1
KP026941286	V2	M12	1	19	23,5	2 ,5	43	10	26	61	66	95	109	13	24	1
KP026941284	R2	M12	1	19	23,5	2 ,5	43	10	26	61	66	95	109	13	24	1
KP026941216	G1	M12	1	19	23,5	2 ,5	43	10	26	61	66	95	109	13	24	1
KP026941287	B7	M12	1	19	23,5	2 ,5	43	10	26	61	66	95	109	13	24	1
KP02695121	GV	M12	23	23	30	32,5	49	12	33	2	77	110	126	15,5	26	1
KP02695122	A4	M12	23	23	30	32,5	49	12	33	2	77	110	126	15,5	26	1
KP026951286	V2	M12	23	23	30	32,5	49	12	33	2	77	110	126	15,5	26	1
KP026951284	R2	M12	23	23	30	32,5	49	12	33	2	77	110	126	15,5	26	1
KP026951216	G1	M12	23	23	30	32,5	49	12	33	2	77	110	126	15,5	26	1
KP026951287	B7	M12	23	23	30	32,5	49	12	33	2	77	110	126	15,5	26	1
KP02695161	GV	M16	23	23	30	32,5	49	12	33	2	77	110	126	15,5	26	1
KP02695162	A4	M16	23	23	30	32,5	49	12	33	2	77	110	126	15,5	26	1
KP026951686	V2	M16	23	23	30	32,5	49	12	33	2	77	110	126	15,5	26	1
KP026951684	R2	M16	23	23	30	32,5	49	12	33	2	77	110	126	15,5	26	1
KP026951616	G1	M16	23	23	30	32,5	49	12	33	2	77	110	126	15,5	26	1
KP026951687	B7	M16	23	23	30	32,5	49	12	33	72	77	110	126	15,5	26	1

20° ADJUSTABLE CLAMPING LEVER

stud polyamide - steel

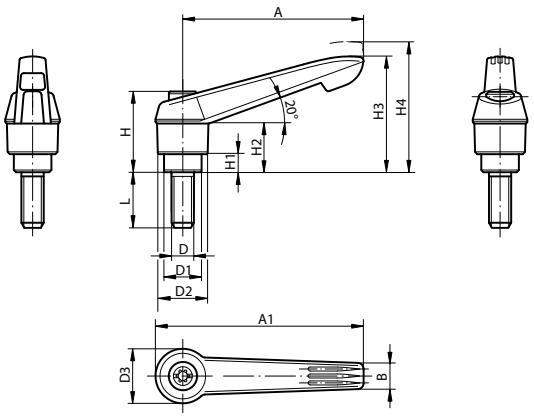

MATERIAL - FINISH

Grip: PA-CV (Glass-filled polyamide) with toothed ring in ZAMA (Die-cast zinc)

Pin: Cl 5.8 (Steel) burnished

COLOUR

- GV Grey RAL 7021
- A4 Orange RAL 2004
- V2 Green RAL 6032
- R2 Red RAL 3020
- G1 Yellow RAL 1021
- B7 Blue RAL 5017

PURCHASE ORDER EXAMPLE

KP02691051X**40** (indicate length "L").

Disengage by lifting

Code	Colour	D	D1	D2	D3	H	H1	H2	H3	H4	A	A1	B	Number of teeth	L variable (**)	Package (pcs)
KP02691051X**	GV	M5	10	13	14,5	24,5	4	15	30	33,5	40	47	7,5	16	10/15/20/25/30/35/40/45/50	1
KP02691052X**	A4	M5	10	13	14,5	24,5	4	15	30	33,5	40	47	7,5	16	10/15/20/25/30/35/40/45/50	1
KP026910586X**	V2	M5	10	13	14,5	24,5	4	15	30	33,5	40	47	7,5	16	10/15/20/25/30/35/40/45/50	1
KP026910584X**	R2	M5	10	13	14,5	24,5	4	15	30	33,5	40	47	7,5	16	10/15/20/25/30/35/40/45/50	1
KP026910516X**	G1	M5	10	13	14,5	24,5	4	15	30	33,5	40	47	7,5	16	10/15/20/25/30/35/40/45/50	1
KP026910587X**	B7	M5	10	13	14,5	24,5	4	15	30	33,5	40	47	7,5	16	10/15/20/25/30/35/40/45/50	1
KP02691061X**	GV	M6	10	13	14,5	24,5	4	15	30	33,5	40	47	7,5	16	10/15/20/25/30/35/40/45/50	1
KP02691062X**	A4	M6	10	13	14,5	24,5	4	15	30	33,5	40	47	7,5	16	10/15/20/25/30/35/40/45/50	1
KP026910686X**	V2	M6	10	13	14,5	24,5	4	15	30	33,5	40	47	7,5	16	10/15/20/25/30/35/40/45/50	1
KP026910684X**	R2	M6	10	13	14,5	24,5	4	15	30	33,5	40	47	7,5	16	10/15/20/25/30/35/40/45/50	1
KP026910616X**	G1	M6	10	13	14,5	24,5	4	15	30	33,5	40	47	7,5	16	10/15/20/25/30/35/40/45/50	1
KP026910687X**	B7	M6	10	13	14,5	24,5	4	15	30	33,5	40	47	7,5	16	10/15/20/25/30/35/40/45/50	1
KP02692061X**	GV	M6	13,5	18	19,5	28,5	6,5	17,5	41,5	45,5	65	75	9,5	20	15/20/25/30/35/40/45/50/55/60	1
KP02692062X**	A4	M6	13,5	18	19,5	28,5	6,5	17,5	41,5	45,5	65	75	9,5	20	15/20/25/30/35/40/45/50/55/60	1
KP026920686X**	V2	M6	13,5	18	19,5	28,5	6,5	17,5	41,5	45,5	65	75	9,5	20	15/20/25/30/35/40/45/50/55/60	1
KP026920684X**	R2	M6	13,5	18	19,5	28,5	6,5	17,5	41,5	45,5	65	75	9,5	20	15/20/25/30/35/40/45/50/55/60	1
KP026920616X**	G1	M6	13,5	18	19,5	28,5	6,5	17,5	41,5	45,5	65	75	9,5	20	15/20/25/30/35/40/45/50/55/60	1
KP026920687X**	B7	M6	13,5	18	19,5	28,5	6,5	17,5	41,5	45,5	65	75	9,5	20	15/20/25/30/35/40/45/50/55/60	1
KP02692081X**	GV	M8	13,5	18	19,5	28,5	6,5	17,5	41,5	45,5	65	75	9,5	20	15/20/25/30/35/40/45/50/55/60	1
KP02692082X**	A4	M8	13,5	18	19,5	28,5	6,5	17,5	41,5	45,5	65	75	9,5	20	15/20/25/30/35/40/45/50/55/60	1
KP026920886X**	V2	M8	13,5	18	19,5	28,5	6,5	17,5	41,5	45,5	65	75	9,5	20	15/20/25/30/35/40/45/50/55/60	1
KP026920884X**	R2	M8	13,5	18	19,5	28,5	6,5	17,5	41,5	45,5	65	75	9,5	20	15/20/25/30/35/40/45/50/55/60	1
KP026920816X**	G1	M8	13,5	18	19,5	28,5	6,5	17,5	41,5	45,5	65	75	9,5	20	15/20/25/30/35/40/45/50/55/60	1
KP026920887X**	B7	M8	13,5	18	19,5	28,5	6,5	17,5	41,5	45,5	65	75	9,5	20	15/20/25/30/35/40/45/50/55/60	1
KP02692101X**	GV	M10	13,5	18	19,5	28,5	6,5	17,5	41,5	45,5	65	75	9,5	20	15/20/25/30/35/40/45/50/55/60	1
KP02692102X**	A4	M10	13,5	18	19,5	28,5	6,5	17,5	41,5	45,5	65	75	9,5	20	15/20/25/30/35/40/45/50/55/60	1
KP026921086X**	V2	M10	13,5	18	19,5	28,5	6,5	17,5	41,5	45,5	65	75	9,5	20	15/20/25/30/35/40/45/50/55/60	1
KP026921084X**	R2	M10	13,5	18	19,5	28,5	6,5	17,5	41,5	45,5	65	75	9,5	20	15/20/25/30/35/40/45/50/55/60	1
KP026921016X**	G1	M10	13,5	18	19,5	28,5	6,5	17,5	41,5	45,5	65	75	9,5	20	15/20/25/30/35/40/45/50/55/60	1
KP026921087X**	B7	M10	13,5	18	19,5	28,5	6,5	17,5	41,5	45,5	65	75	9,5	20	15/20/25/30/35/40/45/50/55/60	1
KP02693081X**	GV	M8	16	21,5	23	37	10	24	53,5	58	80	91,5	11	22	15/20/25/30/35/40/45/50/55/60	1
KP02693082X**	A4	M8	16	21,5	23	37	10	24	53,5	58	80	91,5	11	22	15/20/25/30/35/40/45/50/55/60	1
KP026930886X**	V2	M8	16	21,5	23	37	10	24	53,5	58	80	91,5	11	22	15/20/25/30/35/40/45/50/55/60	1
KP026930884X**	R2	M8	16	21,5	23	37	10	24	53,5	58	80	91,5	11	22	15/20/25/30/35/40/45/50/55/60	1
KP026930816X**	G1	M8	16	21,5	23	37	10	24	53,5	58	80	91,5	11	22	15/20/25/30/35/40/45/50/55/60	1

MATERIAL - FINISH

Grip: PA-CV (Glass-filled polyamide) with toothed ring in ZAMA (Die-cast zinc)

Pin: CI 5.8 (Steel) burnished

COLOUR

GV Grey RAL 7021
A4 Orange RAL 2004
V2 Green RAL 6032
R2 Red RAL 3020
G1 Yellow RAL 1021
B7 Blue RAL 5017

PURCHASE ORDER EXAMPLE

KP02691051X**40** (indicate length "L").

Disengage by lifting

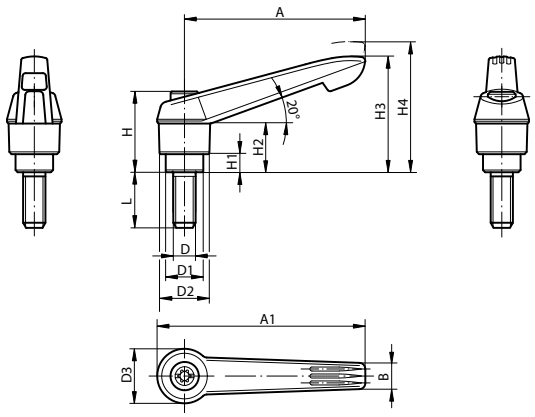

Code	Colour	D	D1	D2	D3	H	H1	H2	H3	H4	A	A1	B	Number of teeth	L variable (**)	Package (pcs)
KP026930887X**	B7	M8	16	21,5	23	37	10	24	53,5	58	80	91,5	11	22	15/20/25/30/35/40/45/50/55/60	1
KP02693101X**	GV	M10	16	21,5	23	37	10	24	53,5	58	80	91,5	11	22	15/20/25/30/35/40/45/50/55/60	1
KP02693102X**	A4	M10	16	21,5	23	37	10	24	53,5	58	80	91,5	11	22	15/20/25/30/35/40/45/50/55/60	1
KP026931086X**	V2	M10	16	21,5	23	37	10	24	53,5	58	80	91,5	11	22	15/20/25/30/35/40/45/50/55/60	1
KP026931084X**	R2	M10	16	21,5	23	37	10	24	53,5	58	80	91,5	11	22	15/20/25/30/35/40/45/50/55/60	1
KP026931016X**	G1	M10	16	21,5	23	37	10	24	53,5	58	80	91,5	11	22	15/20/25/30/35/40/45/50/55/60	1
KP026931087X**	B7	M10	16	21,5	23	37	10	24	53,5	58	80	91,5	11	22	15/20/25/30/35/40/45/50/55/60	1
KP02694101X**	GV	M10	19	25,5	27,5	43	10	26	61	66	95	109	13	24	20/25/30/35/40/45/50/55/60/70/80/90	1
KP02694102X**	A4	M10	19	25,5	27,5	43	10	26	61	66	95	109	13	24	20/25/30/35/40/45/50/55/60/70/80/90	1
KP026941086X**	V2	M10	19	25,5	27,5	43	10	26	61	66	95	109	13	24	20/25/30/35/40/45/50/55/60/70/80/90	1
KP026941084X**	R2	M10	19	25,5	27,5	43	10	26	61	66	95	109	13	24	20/25/30/35/40/45/50/55/60/70/80/90	1
KP026941016X**	G1	M10	19	25,5	27,5	43	10	26	61	66	95	109	13	24	20/25/30/35/40/45/50/55/60/70/80/90	1
KP026941087X**	B7	M10	19	25,5	27,5	43	10	26	61	66	95	109	13	24	20/25/30/35/40/45/50/55/60/70/80/90	1
KP02694121X**	GV	M12	19	25,5	27,5	43	10	26	61	66	95	109	13	24	20/25/30/35/40/45/50/55/60/70/80/90	1
KP02694122X**	A4	M12	19	25,5	27,5	43	10	26	61	66	95	109	13	24	20/25/30/35/40/45/50/55/60/70/80/90	1
KP026941286X**	V2	M12	19	25,5	27,5	43	10	26	61	66	95	109	13	24	20/25/30/35/40/45/50/55/60/70/80/90	1
KP026941284X**	R2	M12	19	25,5	27,5	43	10	26	61	66	95	109	13	24	20/25/30/35/40/45/50/55/60/70/80/90	1
KP026941216X**	G1	M12	19	25,5	27,5	43	10	26	61	66	95	109	13	24	20/25/30/35/40/45/50/55/60/70/80/90	1
KP026941287X**	B7	M12	19	25,5	27,5	43	10	26	61	66	95	109	13	24	20/25/30/35/40/45/50/55/60/70/80/90	1
KP02695121X**	GV	M12	23	30	32,5	49	12	33	72	77	110	126	15,5	26	25/30/35/40/45/50/55/60/70/80/90	1
KP02695122X**	A4	M12	23	30	32,5	49	12	33	72	77	110	126	15,5	26	25/30/35/40/45/50/55/60/70/80/90	1
KP026951286X**	V2	M12	23	30	32,5	49	12	33	72	77	110	126	15,5	26	25/30/35/40/45/50/55/60/70/80/90	1
KP026951284X**	R2	M12	23	30	32,5	49	12	33	72	77	110	126	15,5	26	25/30/35/40/45/50/55/60/70/80/90	1
KP026951216X**	G1	M12	23	30	32,5	49	12	33	72	77	110	126	15,5	26	25/30/35/40/45/50/55/60/70/80/90	1
KP026951287X**	B7	M12	23	30	32,5	49	12	33	72	77	110	126	15,5	26	25/30/35/40/45/50/55/60/70/80/90	1
KP02695161X**	GV	M16	23	30	32,5	49	12	33	72	77	110	126	15,5	26	25/30/35/40/45/50/55/60/70/80/90	1
KP02695162X**	A4	M16	23	30	32,5	49	12	33	72	77	110	126	15,5	26	25/30/35/40/45/50/55/60/70/80/90	1
KP026951686X**	V2	M16	23	30	32,5	49	12	33	72	77	110	126	15,5	26	25/30/35/40/45/50/55/60/70/80/90	1
KP026951684X**	R2	M16	23	30	32,5	49	12	33	72	77	110	126	15,5	26	25/30/35/40/45/50/55/60/70/80/90	1
KP026951616X**	G1	M16	23	30	32,5	49	12	33	72	77	110	126	15,5	26	25/30/35/40/45/50/55/60/70/80/90	1
KP026951687X**	B7	M16	23	30	32,5	49	12	33	72	77	110	126	15,5	26	25/30/35/40/45/50/55/60/70/80/90	1

20° ADJUSTABLE CLAMPING LEVER

BFC polyamide - stainless steel

MATERIAL

Grip: PA-CV(Glass-filled polyamide) with toothed ring in ZAMA (Die-cast zinc)

Bushing: AISI303 (Stainless steel)

COLOUR

GV Grey RAL 7021
A4 Orange RAL 2004
V2 Green RAL 6032
R2 Red RAL 3020
G1 Yellow RAL 1021
B7 Blue RAL 5017

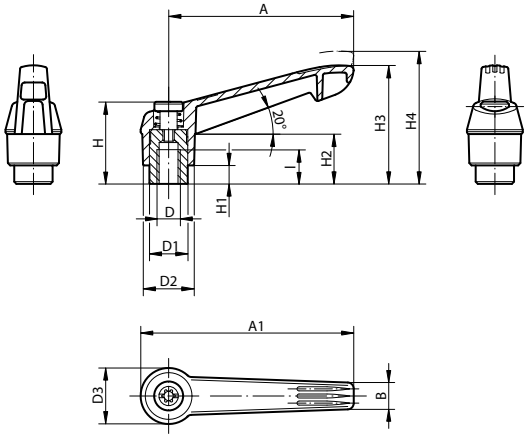

Disengage by lifting

Code	Colour	D	I	D1	D2	D3	H	H1	H2	H3	H4	A	A1	B	Number of teeth	Package (pcs)
KP02701041	GV	M4	9	10	13	14,5	24,5	4	15	30	33,5	40	47	7,5	16	1
KP02701042	A4	M4	9	10	13	14,5	24,5	4	15	30	33,5	40	47	7,5	16	1
KP027010486	V2	M4	9	10	13	14,5	24,5	4	15	30	33,5	40	47	7,5	16	1
KP027010484	R2	M4	9	10	13	14,5	24,5	4	15	30	33,5	40	47	7,5	16	1
KP027010416	G1	M4	9	10	13	14,5	24,5	4	15	30	33,5	40	47	7,5	16	1
KP027010487	B7	M4	9	10	13	14,5	24,5	4	15	30	33,5	40	47	7,5	16	1
KP02701051	GV	M5	9	10	13	14,5	24,5	4	15	30	33,5	40	47	7,5	16	1
KP02701052	A4	M5	9	10	13	14,5	24,5	4	15	30	33,5	40	47	7,5	16	1
KP027010586	V2	M5	9	10	13	14,5	24,5	4	15	30	33,5	40	47	7,5	16	1
KP027010584	R2	M5	9	10	13	14,5	24,5	4	15	30	33,5	40	47	7,5	16	1
KP027010516	G1	M5	9	10	13	14,5	24,5	4	15	30	33,5	40	47	7,5	16	1
KP027010587	B7	M5	9	10	13	14,5	24,5	4	15	30	33,5	40	47	7,5	16	1
KP02701061	GV	M6	9	10	13	14,5	24,5	4	15	30	33,5	40	47	7,5	16	1
KP02701062	A4	M6	9	10	13	14,5	24,5	4	15	30	33,5	40	47	7,5	16	1
KP027010686	V2	M6	9	10	13	14,5	24,5	4	15	30	33,5	40	47	7,5	16	1
KP027010684	R2	M6	9	10	13	14,5	24,5	4	15	30	33,5	40	47	7,5	16	1
KP027010616	G1	M6	9	10	13	14,5	24,5	4	15	30	33,5	40	47	7,5	16	1
KP027010687	B7	M6	9	10	13	14,5	24,5	4	15	30	33,5	40	47	7,5	16	1
KP02702061	GV	M6	12	13,5	18	19,5	28,5	6,5	17,5	41,5	45,5	65	75	9,5	20	1
KP02702062	A4	M6	12	13,5	18	19,5	28,5	6,5	17,5	41,5	45,5	65	75	9,5	20	1
KP027020686	V2	M6	12	13,5	18	19,5	28,5	6,5	17,5	41,5	45,5	65	75	9,5	20	1
KP027020684	R2	M6	12	13,5	18	19,5	28,5	6,5	17,5	41,5	45,5	65	75	9,5	20	1
KP027020616	G1	M6	12	13,5	18	19,5	28,5	6,5	17,5	41,5	45,5	65	75	9,5	20	1
KP027020687	B7	M6	12	13,5	18	19,5	28,5	6,5	17,5	41,5	45,5	65	75	9,5	20	1
KP02702081	GV	M8	12	13,5	18	19,5	28,5	6,5	17,5	41,5	45,5	65	75	9,5	20	1
KP02702082	A4	M8	12	13,5	18	19,5	28,5	6,5	17,5	41,5	45,5	65	75	9,5	20	1
KP027020886	V2	M8	12	13,5	18	19,5	28,5	6,5	17,5	41,5	45,5	65	75	9,5	20	1
KP027020884	R2	M8	12	13,5	18	19,5	28,5	6,5	17,5	41,5	45,5	65	75	9,5	20	1
KP027020816	G1	M8	12	13,5	18	19,5	28,5	6,5	17,5	41,5	45,5	65	75	9,5	20	1
KP027020887	B7	M8	12	13,5	18	19,5	28,5	6,5	17,5	41,5	45,5	65	75	9,5	20	1
KP02703081	GV	M8	14	16	21,5	23	37	10	24	53,5	58	80	91,5	11	22	1
KP02703082	A4	M8	14	16	21,5	23	37	10	24	53,5	58	80	91,5	11	22	1
KP027030886	V2	M8	14	16	21,5	23	37	10	24	53,5	58	80	91,5	11	22	1
KP027030884	R2	M8	14	16	21,5	23	37	10	24	53,5	58	80	91,5	11	22	1
KP027030816	G1	M8	14	16	21,5	23	37	10	24	53,5	58	80	91,5	11	22	1

MATERIAL

Grip: PA-CV(Glass-filled polyamide) with toothed ring in ZAMA (Die-cast zinc)

Bushing: AISI303 (Stainless steel)

COLOUR

GV Grey RAL 7021
A4 Orange RAL 2004
V2 Green RAL 6032
R2 Red RAL 3020
G1 Yellow RAL 1021
B7 Blue RAL 5017

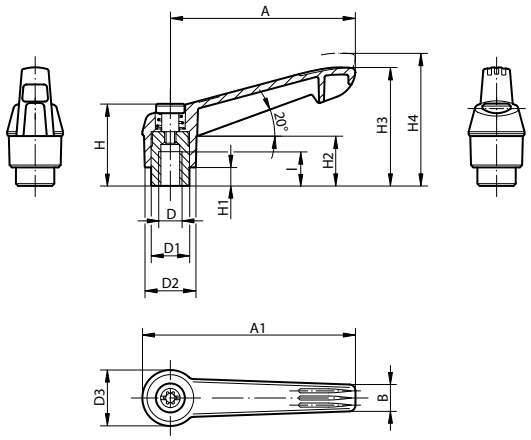

Code	Colour	D	l	D1	D2	D3	H	H1	H2	H3	H4	A	A1	B	Number of teeth	Package (pcs)
KP027030887	B7	M8	14	16	21,5	23	37	10	24	53,5	58	80	91,5	11	22	1
KP02703101	GV	M10	14	16	21,5	23	37	10	24	53,5	58	80	91,5	11	22	1
KP02703102	A4	M10	14	16	21,5	23	37	10	24	53,5	58	80	91,5	11	22	1
KP027031086	V2	M10	14	16	21,5	23	37	10	24	53,5	58	80	91,5	11	22	1
KP027031084	R2	M10	14	16	21,5	23	37	10	24	53,5	58	80	91,5	11	22	1
KP027031016	G1	M10	14	16	21,5	23	37	10	24	53,5	58	80	91,5	11	22	1
KP027031087	B7	M10	14	16	21,5	23	37	10	24	53,5	58	80	91,5	11	22	1
KP02704101	GV	M10	17	19	25,5	27,5	43	10	26	61	66	95	109	13	24	1
KP02704102	A4	M10	17	19	25,5	27,5	43	10	26	61	66	95	109	13	24	1
KP027041086	V2	M10	17	19	25,5	27,5	43	10	26	61	66	95	109	13	24	1
KP027041084	R2	M10	17	19	25,5	27,5	43	10	26	61	66	95	109	13	24	1
KP027041016	G1	M10	17	19	25,5	27,5	43	10	26	61	66	95	109	13	24	1
KP027041087	B7	M10	17	19	25,5	27,5	43	10	26	61	66	95	109	13	24	1
KP02704121	GV	M12	17	19	25,5	27,5	43	10	26	61	66	95	109	13	24	1
KP02704122	A4	M12	17	19	25,5	27,5	43	10	26	61	66	95	109	13	24	1
KP027041286	V2	M12	17	19	25,5	27,5	43	10	26	61	66	95	109	13	24	1
KP027041284	R2	M12	17	19	25,5	27,5	43	10	26	61	66	95	109	13	24	1
KP027041216	G1	M12	17	19	25,5	27,5	43	10	26	61	66	95	109	13	24	1
KP027041287	B7	M12	17	19	25,5	27,5	43	10	26	61	66	95	109	13	24	1
KP02705121	GV	M12	23	23	30	32,5	49	12	33	72	77	110	126	15,5	26	1
KP02705122	A4	M12	23	23	30	32,5	49	12	33	72	77	110	126	15,5	26	1
KP027051286	V2	M12	23	23	30	32,5	49	12	33	72	77	110	126	15,5	26	1
KP027051284	R2	M12	23	23	30	32,5	49	12	33	72	77	110	126	15,5	26	1
KP027051216	G1	M12	23	23	30	32,5	49	12	33	72	77	110	126	15,5	26	1
KP027051287	B7	M12	23	23	30	32,5	49	12	33	72	77	110	126	15,5	26	1
KP02705161	GV	M16	23	23	30	32,5	49	12	33	72	77	110	126	15,5	26	1
KP02705162	A4	M16	23	23	30	32,5	49	12	33	72	77	110	126	15,5	26	1
KP027051686	V2	M16	23	23	30	32,5	49	12	33	72	77	110	126	15,5	26	1
KP027051684	R2	M16	23	23	30	32,5	49	12	33	72	77	110	126	15,5	26	1
KP027051616	G1	M16	23	23	30	32,5	49	12	33	72	77	110	126	15,5	26	1
KP027051687	B7	M16	23	23	30	32,5	49	12	33	72	77	110	126	15,5	26	1

20° ADJUSTABLE CLAMPING LEVER

stud polyamide - stainless steel

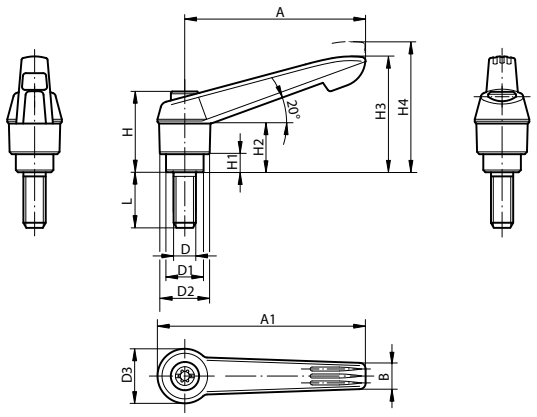

MATERIAL

Grip: PA-CV (Glass-filled polyamide) with toothed ring in ZAMA (Die-cast zinc)

Pin: AISI303 (Stainless steel)

COLOUR

GV Grey RAL 7021
A4 Orange RAL 2004
V2 Green RAL 6032
R2 Red RAL 3020
G1 Yellow RAL 1021
B7 Blue RAL 5017

PURCHASE ORDER EXAMPLE

KP02701051X**10** (indicate length "L").

Disengage by lifting

Code	Colour	D	D1	D2	D3	H	H1	H2	H3	H4	A	A1	B	Number of teeth	L variable (**)	Package (pcs)
KP02701051X**	GV	M5	10	13	14,5	24,5	4	15	30	33,5	40	47	7,5	16	10/15/20/25	1
KP02701052X**	A4	M5	10	13	14,5	24,5	4	15	30	33,5	40	47	7,5	16	10/15/20/25	1
KP027010586X**	V2	M5	10	13	14,5	24,5	4	15	30	33,5	40	47	7,5	16	10/15/20/25	1
KP027010584X**	R2	M5	10	13	14,5	24,5	4	15	30	33,5	40	47	7,5	16	10/15/20/25	1
KP027010516X**	G1	M5	10	13	14,5	24,5	4	15	30	33,5	40	47	7,5	16	10/15/20/25	1
KP027010587X**	B7	M5	10	13	14,5	24,5	4	15	30	33,5	40	47	7,5	16	10/15/20/25	1
KP02701061X**	GV	M6	10	13	14,5	24,5	4	15	30	33,5	40	47	7,5	16	10/15/20/25/30/40/50	1
KP02701062X**	A4	M6	10	13	14,5	24,5	4	15	30	33,5	40	47	7,5	16	10/15/20/25/30/40/50	1
KP027010686X**	V2	M6	10	13	14,5	24,5	4	15	30	33,5	40	47	7,5	16	10/15/20/25/30/40/50	1
KP027010684X**	R2	M6	10	13	14,5	24,5	4	15	30	33,5	40	47	7,5	16	10/15/20/25/30/40/50	1
KP027010616X**	G1	M6	10	13	14,5	24,5	4	15	30	33,5	40	47	7,5	16	10/15/20/25/30/40/50	1
KP027010687X**	B7	M6	10	13	14,5	24,5	4	15	30	33,5	40	47	7,5	16	10/15/20/25/30/40/50	1
KP02702061X**	GV	M6	13,5	18	19,5	28,5	6,5	17,5	41,5	45,5	65	75	9,5	20	15/20/25/30/40/50/60	1
KP02702062X**	A4	M6	13,5	18	19,5	28,5	6,5	17,5	41,5	45,5	65	75	9,5	20	15/20/25/30/40/50/60	1
KP027020686X**	V2	M6	13,5	18	19,5	28,5	6,5	17,5	41,5	45,5	65	75	9,5	20	15/20/25/30/40/50/60	1
KP027020684X**	R2	M6	13,5	18	19,5	28,5	6,5	17,5	41,5	45,5	65	75	9,5	20	15/20/25/30/40/50/60	1
KP027020616X**	G1	M6	13,5	18	19,5	28,5	6,5	17,5	41,5	45,5	65	75	9,5	20	15/20/25/30/40/50/60	1
KP027020687X**	B7	M6	13,5	18	19,5	28,5	6,5	17,5	41,5	45,5	65	75	9,5	20	15/20/25/30/40/50/60	1
KP02702081X**	GV	M8	13,5	18	19,5	28,5	6,5	17,5	41,5	45,5	65	75	9,5	20	15/20/25/30/40/50/60	1
KP02702082X**	A4	M8	13,5	18	19,5	28,5	6,5	17,5	41,5	45,5	65	75	9,5	20	15/20/25/30/40/50/60	1
KP027020886X**	V2	M8	13,5	18	19,5	28,5	6,5	17,5	41,5	45,5	65	75	9,5	20	15/20/25/30/40/50/60	1
KP027020884X**	R2	M8	13,5	18	19,5	28,5	6,5	17,5	41,5	45,5	65	75	9,5	20	15/20/25/30/40/50/60	1
KP027020816X**	G1	M8	13,5	18	19,5	28,5	6,5	17,5	41,5	45,5	65	75	9,5	20	15/20/25/30/40/50/60	1
KP027020887X**	B7	M8	13,5	18	19,5	28,5	6,5	17,5	41,5	45,5	65	75	9,5	20	15/20/25/30/40/50/60	1
KP02702101X**	GV	M10	13,5	18	19,5	28,5	6,5	17,5	41,5	45,5	65	75	9,5	20	20/25/30/40/50/60	1
KP02702102X**	A4	M10	13,5	18	19,5	28,5	6,5	17,5	41,5	45,5	65	75	9,5	20	20/25/30/40/50/60	1
KP027021086X**	V2	M10	13,5	18	19,5	28,5	6,5	17,5	41,5	45,5	65	75	9,5	20	20/25/30/40/50/60	1
KP027021084X**	R2	M10	13,5	18	19,5	28,5	6,5	17,5	41,5	45,5	65	75	9,5	20	20/25/30/40/50/60	1
KP027021016X**	G1	M10	13,5	18	19,5	28,5	6,5	17,5	41,5	45,5	65	75	9,5	20	20/25/30/40/50/60	1
KP027021087X**	B7	M10	13,5	18	19,5	28,5	6,5	17,5	41,5	45,5	65	75	9,5	20	20/25/30/40/50/60	1
KP02703081X**	GV	M8	16	21,5	23	37	10	24	53,5	58	80	91,5	11	22	20/25/30/40/50/60	1
KP02703082X**	A4	M8	16	21,5	23	37	10	24	53,5	58	80	91,5	11	22	20/25/30/40/50/60	1
KP027030886X**	V2	M8	16	21,5	23	37	10	24	53,5	58	80	91,5	11	22	20/25/30/40/50/60	1
KP027030884X**	R2	M8	16	21,5	23	37	10	24	53,5	58	80	91,5	11	22	20/25/30/40/50/60	1
KP027030816X**	G1	M8	16	21,5	23	37	10	24	53,5	58	80	91,5	11	22	20/25/30/40/50/60	1

MATERIAL

Grip: PA-CV (Glass-filled polyamide) with toothed ring in ZAMA (Die-cast zinc)

Pin: AISI303 (Stainless steel)

COLOUR

GV Grey RAL 7021
A4 Orange RAL 2004
V2 Green RAL 6032
R2 Red RAL 3020
G1 Yellow RAL 1021
B7 Blue RAL 5017

PURCHASE ORDER EXAMPLE

KP02701051X**10** (indicate length "L").

Disengage by lifting

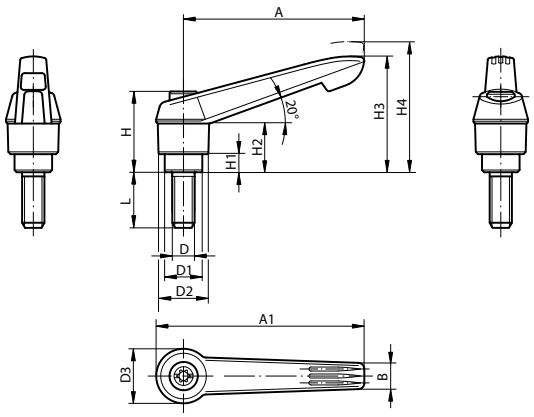

Code	Colour	D	D1	D2	D3	H	H1	H2	H3	H4	A	A1	B	Number of teeth	L variable (**)	Package (pcs)
KP027030887X**	B7	M8	16	21,5	23	37	10	24	53,5	58	80	91,5	11	22	20/25/30/40/50/60	1
KP02703101X**	GV	M10	16	21,5	23	37	10	24	53,5	58	80	91,5	11	22	20/25/30/40/50/60	1
KP02703102X**	A4	M10	16	21,5	23	37	10	24	53,5	58	80	91,5	11	22	20/25/30/40/50/60	1
KP027031086X**	V2	M10	16	21,5	23	37	10	24	53,5	58	80	91,5	11	22	20/25/30/40/50/60	1
KP027031084X**	R2	M10	16	21,5	23	37	10	24	53,5	58	80	91,5	11	22	20/25/30/40/50/60	1
KP027031016X**	G1	M10	16	21,5	23	37	10	24	53,5	58	80	91,5	11	22	20/25/30/40/50/60	1
KP027031087X**	B7	M10	16	21,5	23	37	10	24	53,5	58	80	91,5	11	22	20/25/30/40/50/60	1
KP02704121X**	GV	M12	19	25,5	27,5	43	10	26	61	66	95	109	13	24	25/30/40/50/60	1
KP02704122X**	A4	M12	19	25,5	27,5	43	10	26	61	66	95	109	13	24	25/30/40/50/60	1
KP027041286X**	V2	M12	19	25,5	27,5	43	10	26	61	66	95	109	13	24	25/30/40/50/60	1
KP027041284X**	R2	M12	19	25,5	27,5	43	10	26	61	66	95	109	13	24	25/30/40/50/60	1
KP027041216X**	G1	M12	19	25,5	27,5	43	10	26	61	66	95	109	13	24	25/30/40/50/60	1
KP027041287X**	B7	M12	19	25,5	27,5	43	10	26	61	66	95	109	13	24	25/30/40/50/60	1
KP02705161X**	GV	M16	23	30	32,5	49	12	33	72	77	110	126	15,5	26	30/40/50/60	1
KP02705162X**	A4	M16	23	30	32,5	49	12	33	72	77	110	126	15,5	26	30/40/50/60	1
KP027051686X**	V2	M16	23	30	32,5	49	12	33	72	77	110	126	15,5	26	30/40/50/60	1
KP027051684X**	R2	M16	23	30	32,5	49	12	33	72	77	110	126	15,5	26	30/40/50/60	1
KP027051616X**	G1	M16	23	30	32,5	49	12	33	72	77	110	126	15,5	26	30/40/50/60	1
KP027051687X**	B7	M16	23	30	32,5	49	12	33	72	77	110	126	15,5	26	30/40/50/60	1

ADJUSTABLE CLAMPING LEVER WITH BUTTON
BFC

MATERIAL
Grip: PA6-CV30% (Glass-filled polyamide)
Button: TMP (Thermoplastic)
Bushing: OT58 (Brass)

COLOUR
Grip: NE Black
Button: RO Red

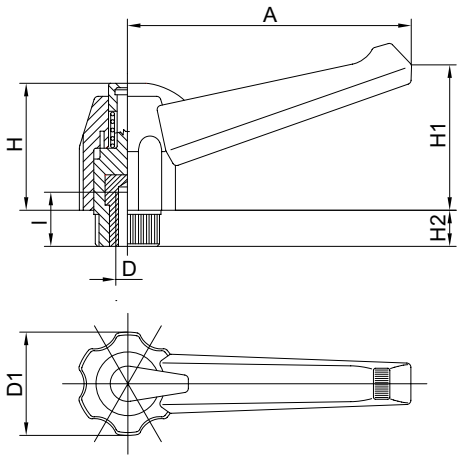

Code (NE)	D	I	D1	A	H1	H	H2	Package (pcs)
SR0EMLR400500	M5	10	18	40	24	22	6	50
SR0EMLR400600	M6	10	18	40	24	22	6	50
SR0EMLR600600	M6	17	21	60	32	30	7	50
SR0EMLR600800	M8	15	21	60	32	30	7	50
SR0EMLR800600	M6	17	30	80	42	36	10	50
SR0EMLR800800	M8	17	30	80	42	36	10	50
SR0EMLR801000	M10	17	30	80	42	36	10	50
SR0EMLR801200	M12	17	30	80	42	36	10	50
SR0EMLR100800	M8	17	34	100	62	40	11	50
SR0EMLR101000	M10	17	34	100	62	40	11	50
SR0EMLR101200	M12	17	34	100	62	40	11	50

MATERIAL - SURFACE TREATMENT

Grip: PA6-CV30% (Glass-filled polyamide)
Button: TMP (Thermoplastic)
Pin: Cl 4.8 (Steel) white galvanized

COLOUR

Grip: (NE) Black
Button: (RO) Red

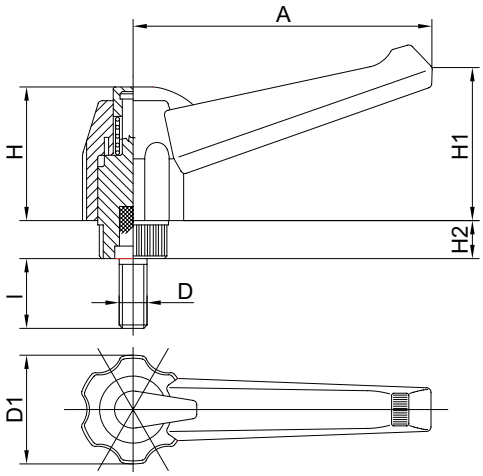

Code (NE)	D	I	D1	A	H1	H	H2	Package (pcs)
SR0EMLR400510	M5	10	18	40	24	22	6	50
SR0EMLR400515	M5	15	18	40	24	22	6	50
SR0EMLR400520	M5	20	18	40	24	22	6	50
SR0EMLR400525	M5	25	18	40	24	22	6	50
SR0EMLR400530	M5	30	18	40	24	22	6	50
SR0EMLR400610	M6	10	18	40	24	22	6	50
SR0EMLR400615	M6	15	18	40	24	22	6	50
SR0EMLR400620	M6	20	18	40	24	22	6	50
SR0EMLR400625	M6	25	18	40	24	22	6	50
SR0EMLR400630	M6	30	18	40	24	22	6	50
SR0EMLR400635	M6	35	18	40	24	22	6	50
SR0EMLR400640	M6	40	18	40	24	22	6	50
SR0EMLR400815	M8	15	18	40	24	22	6	50
SR0EMLR400820	M8	20	18	40	24	22	6	50
SR0EMLR400825	M8	25	18	40	24	22	6	50
SR0EMLR400830	M8	30	18	40	24	22	6	50
SR0EMLR400835	M8	35	18	40	24	22	6	50
SR0EMLR400840	M8	40	18	40	24	22	6	50
SR0EMLR600610	M6	10	21	60	32	30	7	50
SR0EMLR600615	M6	15	21	60	32	30	7	50
SR0EMLR600620	M6	20	21	60	32	30	7	50
SR0EMLR600625	M6	25	21	60	32	30	7	50
SR0EMLR600630	M6	30	21	60	32	30	7	50
SR0EMLR600635	M6	35	21	60	32	30	7	50
SR0EMLR600640	M6	40	21	60	32	30	7	50
SR0EMLR600810	M8	10	21	60	32	30	7	50
SR0EMLR600815	M8	15	21	60	32	30	7	50
SR0EMLR600820	M8	20	21	60	32	30	7	50
SR0EMLR600825	M8	25	21	60	32	30	7	50
SR0EMLR600830	M8	30	21	60	32	30	7	50
SR0EMLR600835	M8	35	21	60	32	30	7	50
SR0EMLR600840	M8	40	21	60	32	30	7	50
SR0EMLR600845	M8	45	21	60	32	30	7	50
SR0EMLR600850	M8	50	21	60	32	30	7	50
SR0EMLR800625	M6	25	30	80	42	36	10	50

ADJUSTABLE CLAMPING LEVER WITH BUTTON
BFC

MATERIAL - SURFACE TREATMENT
Grip: PA6-CV 30% (Glass-filled polyamide)
Button: TMP (Thermoplastic)
Pin: Cl 4.8 (Steel) white galvanized

COLOUR
Grip: NE Black
Button: RO Red

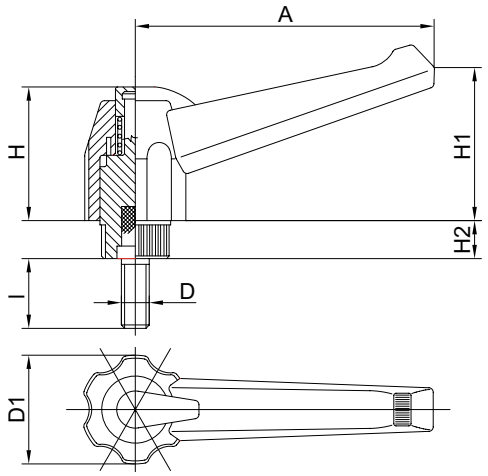

Code (NE)	D	l	D1	A	H1	H	H2	Package (pcs)
SR0EMLR800810	M8	10	30	80	42	36	10	50
SR0EMLR800815	M8	15	30	80	42	36	10	50
SR0EMLR800820	M8	20	30	80	42	36	10	50
SR0EMLR800825	M8	25	30	80	42	36	10	50
SR0EMLR800830	M8	30	30	80	42	36	10	50
SR0EMLR800835	M8	35	30	80	42	36	10	50
SR0EMLR800840	M8	40	30	80	42	36	10	50
SR0EMLR800850	M8	50	30	80	42	36	10	50
SR0EMLR801015	M10	15	30	80	42	36	10	50
SR0EMLR801020	M10	20	30	80	42	36	10	50
SR0EMLR801025	M10	25	30	80	42	36	10	50
SR0EMLR801030	M10	30	30	80	42	36	10	50
SR0EMLR801035	M10	35	30	80	42	36	10	50
SR0EMLR801040	M10	40	30	80	42	36	10	50
SR0EMLR801050	M10	50	30	80	42	36	10	50
SR0EMLR801060	M10	60	30	80	42	36	10	50
SR0EMLR801065	M10	65	30	80	42	36	10	50
SR0EMLR801070	M10	70	30	80	42	36	10	50
SR0EMLR801080	M10	80	30	80	42	36	10	50
SR0EMLR100815	M8	15	34	100	62	40	11	50
SR0EMLR100820	M8	20	34	100	62	40	11	50
SR0EMLR100825	M8	25	34	100	62	40	11	50
SR0EMLR100830	M8	30	34	100	62	40	11	50
SR0EMLR100835	M8	35	34	100	62	40	11	50
SR0EMLR100840	M8	40	34	100	62	40	11	50
SR0EMLR101015	M10	15	34	100	62	40	11	50
SR0EMLR101020	M10	20	34	100	62	40	11	50
SR0EMLR101025	M10	25	34	100	62	40	11	50
SR0EMLR101030	M10	30	34	100	62	40	11	50
SR0EMLR101035	M10	35	34	100	62	40	11	50
SR0EMLR101040	M10	40	34	100	62	40	11	50
SR0EMLR101050	M10	50	34	100	62	40	11	50
SR0EMLR801230	M12	30	34	100	62	40	11	50

MATERIAL - SURFACE TREATMENT

Grip: C15 (Steel) galvanized white
Compression washer: PA6.6-CV35% (Glass-filled polyamide) black
Insert: AISI303 (Stainless steel)
Bushing: CI 5.8 (Steel) white galvanized
Washer: CI 5.8 (Steel) white galvanized

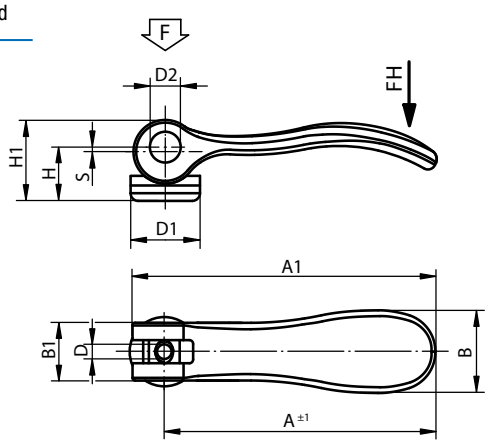

Code	D	D1	D2	B	B1	H	H1	A	A1	Stroke (S)	Clamping power F (kN)	Manual force FH (N)	Package (pcs)
KP07881502205	M5	18,1	9	21,5	15	14,5	22	70,4	79,2	1,2	4	120	1
KP07881502206	M6	18,1	9	21,5	15	14,5	22	70,4	79,2	1,2	4	120	1
KP07882502208	M8	27,1	11	33,2	24	18	28,5	96	108	1,5	8	350	1

MATERIAL - SURFACE TREATMENT

Grip: C15 (Steel) galvanized white
Compression washer: PA6.6-CV35% (Glass-filled polyamide) black
Insert: AISI303 (Stainless steel)
Pin: CI 5.8 (Steel) white galvanized
Washer: CI 5.8 (Steel) white galvanized

PURCHASE ORDER EXAMPLE
KP07881502205X**20** (indicate length "L").

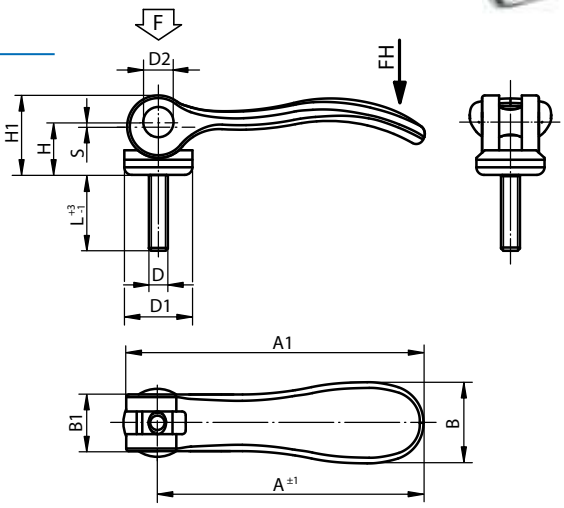

Code	D	D1	D2	B	B1	H	H1	A	A1	L variable (**)	Stroke (S)	Clamping power F (kN)	Manual force FH (N)	Package (pcs)
KP07881502205X**	M5	18,1	9	21,5	15	14,5	22	70,4	79,2	20/30/40/50	1,2	4	120	1
KP07881502206X**	M6	18,1	9	21,5	15	14,5	22	70,4	79,2	20/30/40/50	1,2	4	120	1
KP07881502208X**	M8	27,1	11	33,2	24	18	28,5	96	108	25/30/40/50	1,5	8	350	1
KP07881502210X**	M10	27,1	11	33,2	24	18	28,5	96	108	25/30/40/50	1,5	8	350	1

CAM LEVER
BFC stainless steel

MATERIAL - SURFACE TREATMENT

Grip:	AISI304 (Stainless steel) electrolytic polishing AISI304 (Stainless steel) sandblasted
Compression washer:	PA6.6-CV35% (Glass-filled polyamide) black
Insert:	AISI303 (Stainless steel)
Bushing:	AISI303 (Stainless steel)
Washer:	AISI303 (Stainless steel)

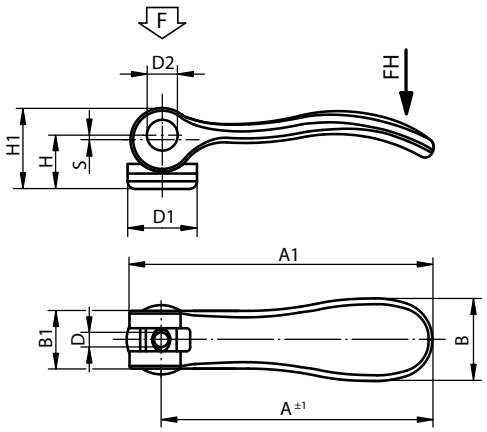

Code electrolytic polishing	Code sandblasted	D	D1	D2	B	B1	H	H1	A	A1	Stroke (S)	Clamping power F (kN)	Manual force FH (N)	Package (pcs)
KP06459512003	**KP06459512303**	M3	12	6	14,4	11,5	9	13	36,2	41,7	1	1,5	90	1
KP06459512004	**KP06459512304**	M4	12	6	14,4	11,5	9	13	36,2	41,7	1	1,5	90	1
KP06450512004	**KP06450512304**	M4	15,4	8	18	13	11,2	17	52,3	59,1	1	2,5	100	1
KP06450512005	**KP06450512305**	M5	15,4	8	18	13	11,2	17	52,3	59,1	1	2,5	100	1
KP06451512005	**KP06451512305**	M5	18,1	9	21,5	15	14,5	22	70,4	79,2	1,2	4	120	1
KP06451512006	**KP06451512306**	M6	18,1	9	21,5	15	14,5	22	70,4	79,2	1,2	4	120	1
KP06452512008	**KP06452512308**	M8	27,1	11	33,3	24	18	28,5	96	108	1,5	8	350	1

MATERIAL - SURFACE TREATMENT

Grip: AISI304 (Stainless steel) electrolytic polishing
AISI304 (Stainless steel) sandblasted

Compression washer: PA6.6-CV35% Glass-filled polyamide) black
Insert: AISI303 (Stainless steel)
Pin: AISI303 (Stainless steel)
Washer: AISI303 (Stainless steel)

PURCHASE ORDER EXAMPLE

KP06451512005X**20** (indicate length "L").

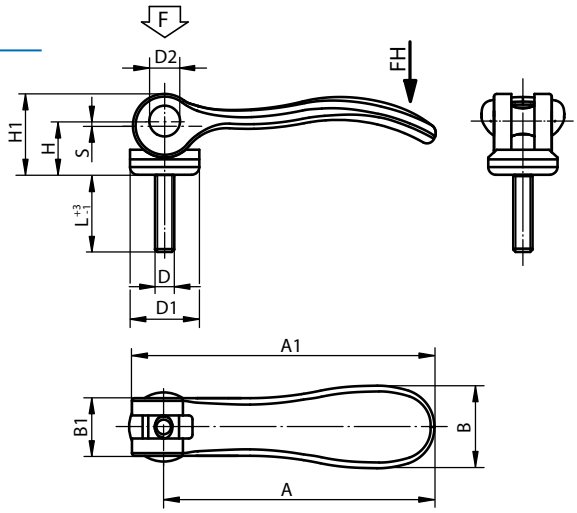

Code electrolytic polishing	Code sandblasted	D	D1	D2	B	B1	H	H1	A	A1	L variable (**)	Stroke (S)	Clamping power F (kN)	Manual force FH (N)	Package (pcs)
KP06459512003X**	**KP06459512303X****	M3	12	6	14,4	11,5	9	13	36,2	41,7	10/15/30	1	1,5	90	1
KP06459512004X**	**KP06459512304X****	M4	12	6	14,4	11,5	9	13	36,2	41,7	10/15/30	1	1,5	90	1
KP06450512004X**	**KP06450512304X****	M4	15,4	8	18	13	11,2	17	52,3	59,1	15/20/30	1	2,5	100	1
KP06450512005X**	**KP06450512305X****	M5	15,4	8	18	13	11,2	17	52,3	59,1	20/30/40/50	1	2,5	100	1
KP06451512005X**	**KP06451512305X****	M5	18,1	9	21,5	15	14,5	22	70,4	79,5	20/30/40/50	1,2	4	120	1
KP06451512006X**	**KP06451512306X****	M6	18,1	9	21,5	15	14,5	22	70,4	79,5	20/30/40/50	1,2	4	120	1
KP06452512008X**	**KP06452512308X****	M8	27,1	11	33,3	24	18	28,5	96	108	25/30/40/50	1,5	8	350	1
KP06452512010X**	**KP06452512310X****	M10	27,1	11	33,3	24	18	28,5	96	108	25/30/40/50	1,5	8	350	1

MATERIAL - SURFACE TREATMENT

Grip:	1.4308 (Stainless steel) electrolytic polishing 1.4308 (Stainless steel) sandblasted
Compression washer:	AISI420 (Stainless steel)
Insert:	AISI303 (Stainless steel)
Bushing:	AISI303 (Stainless steel)

NOTE

The clamping surface of the compression washer is slightly lubricated with FDA-compliant grease, making it suitable for applications in the food and pharmaceutical industries.

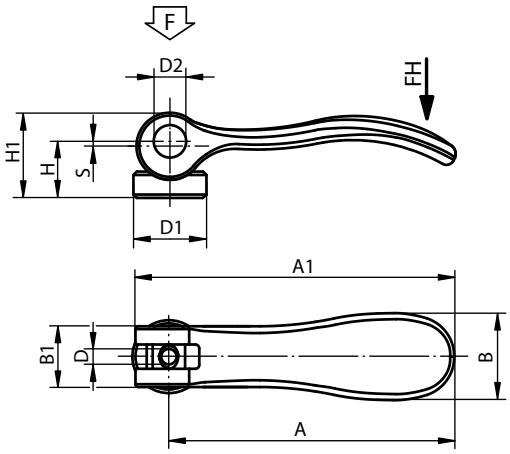

Code electrolytic polishing	Code sandblasted	D	D1	D2	B	B1	H	H1	A	A1	Stroke (S)	Clamping power F (kN)	Manual force FH (N)	Package (pcs)
KP06459541003	**KP06459541303**	M3	12	6	14,4	11,5	9	13,5	36,2	41,7	1	1,5	90	1
KP06459541004	**KP06459541304**	M4	12	6	14,4	11,5	9	13,5	36,2	41,7	1	1,5	90	1
KP06450541004	**KP06450541304**	M4	15,4	8	18	13	11,4	17,2	52,3	59,1	1	2,5	100	1
KP06450541005	**KP06450541305**	M5	15,4	8	18	13	11,4	17,2	52,3	59,1	1	2,5	100	1
KP06451541005	**KP06451541305**	M5	18	9	21,5	15	14,7	22	70,4	79,2	1,2	4	120	1
KP06451541006	**KP06451541306**	M6	18	9	21,5	15	14,4	22	70,4	79,2	1,2	4	120	1
KP06452541008	**KP06452541308**	M8	27	11	33,3	24	18,3	28,8	96	108	1,5	8	350	1

MATERIAL - SURFACE TREATMENT

Grip:	1.4308 (Stainless steel) electrolytic polishing
	1.4308 (Stainless steel) sandblasted
Compression washer:	AISI420 (Stainless steel)
Insert:	AISI303 (Stainless steel)
Pin:	AISI303 (Stainless steel)

NOTE

Upon delivery, the clamping surface of the compression washer is slightly lubricated.
The lubricant is FDA compliant and therefore suitable for the food and pharmaceutical industries.

PURCHASE ORDER EXAMPLE

KP06450541005X**20** (indicate length "L").

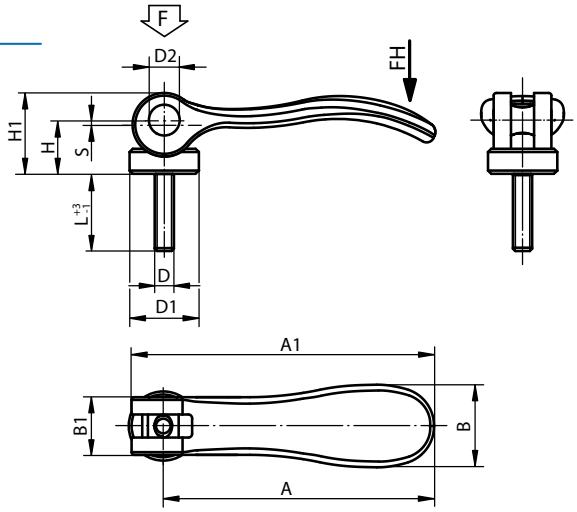

Code electrolytic polishing	Code sandblasted	D	D1	D2	B	B1	H	H1	A	A1	L variable (**)	Stroke (S)	Clamping power F (kN)	Manual force FH (N)	Package (pcs)
KP06459541003X**	**KP06459541303X****	M3	12	6	14,4	11,5	9	13,5	36,2	41,7	10/15/30	1	1,5	90	1
KP06459541004X**	**KP06459541304X****	M4	12	6	14,4	11,5	9	13,5	36,2	41,7	10/15/30	1	1,5	90	1
KP06450541004X**	**KP06450541304X****	M4	15,4	8	18	13	11,4	17,2	52,3	59,1	15/20/30	1	2,5	100	1
KP06450541005X**	**KP06450541305X****	M5	15,4	8	18	13	11,4	17,2	52,3	59,1	20/30/40/50	1	2,5	100	1
KP06451541005X**	**KP06451541305X****	M5	18	9	21,5	15	14,7	22	70,4	79,2	20/30/40/50	1,2	4	120	1
KP06451541006X**	**KP06451541306X****	M6	18	9	21,5	15	14,7	22	70,4	79,2	20/30/40/50	1,2	4	120	1
KP06452541008X**	**KP06452541308X****	M8	27	11	33,3	24	18,3	28,8	96	108	25/30/40/50	1,5	8	350	1
KP06452541010X**	**KP06452541310X****	M10	27	11	33,3	24	18,3	28,8	96	108	25/30/40/50	1,5	8	350	1

MATERIAL
PA6-CV 30% (Glass-filled polyamide)

COLOUR
NE Black

NOTES
On request also available for panel thickness 2÷3 mm.

PLACEMENT

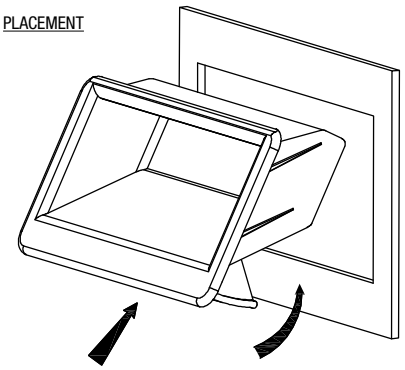

INSERTION

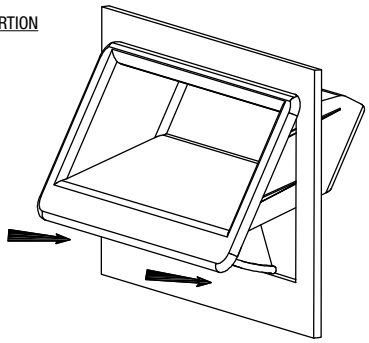

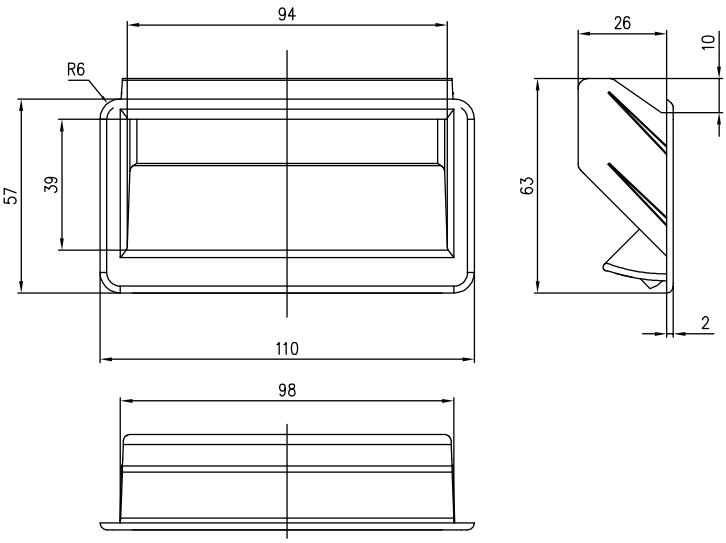

DRILLING TEMPLATE

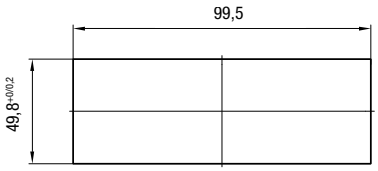

Code NE	Panel thickness	Package (pcs)
FL00000006200	1,5÷2	200

MATERIAL
ABS (Acrylonitrile butadiene styrene)

COLOUR
(NE) Black

OPERATING TEMPERATURE
-20°C ÷ 60°C

NOTES
On request also available for panel thickness 1,8÷2,1 e 2,1÷2,5 mm

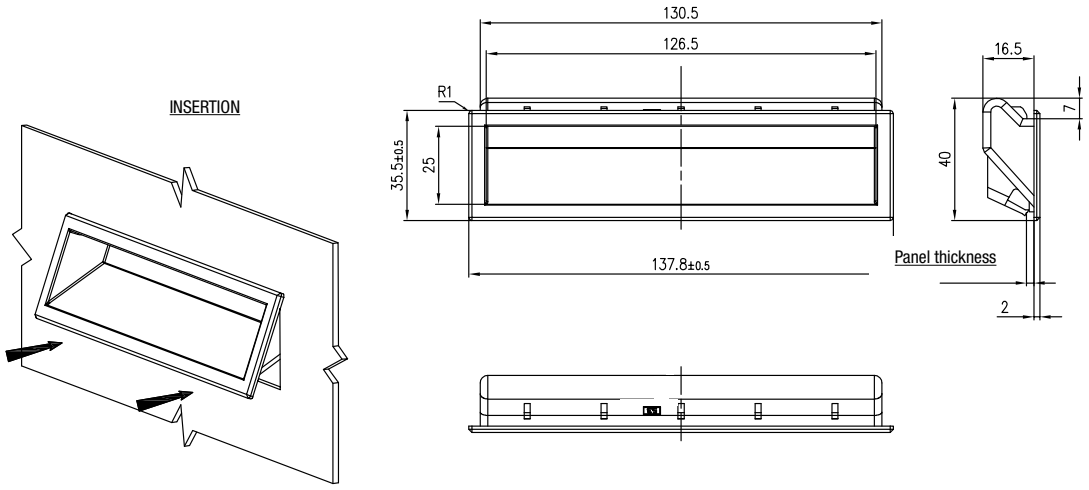

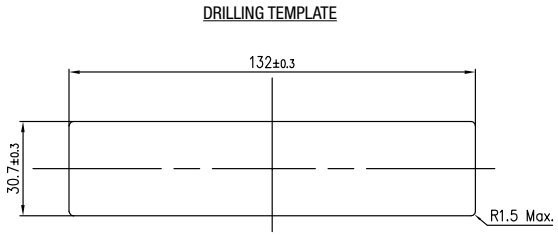

Code (NE)	Panel thickness	Package (pcs)
FL00000006300	1÷1,4	400
FL00000006400	1,4÷1,8	400

MATERIAL
ABS (Acrylonitrile butadiene styrene)

COLOUR
NE Black
G5 Grey RAL 7035

OPERATING TEMPERATURE
-20°C ÷ 60°C

PLACEMENT

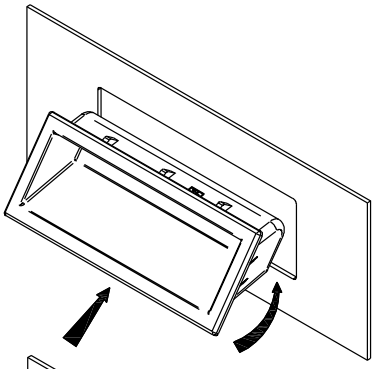

INSERTION

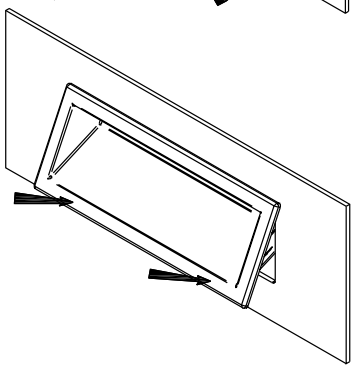

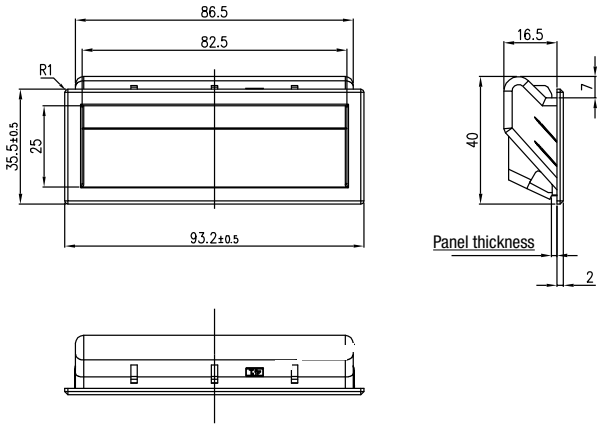

DRILLING TEMPLATE

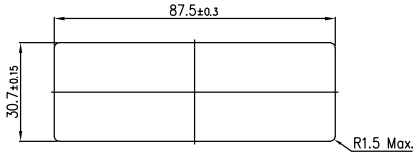

Code NE	Code G5	Panel thickness	Package (pcs)
FL00000005400	**FL00000005500**	1÷1,4	500
FL00000004600	**FL00000005600**	1,4÷1,8	500
FL00000005700	**FL00000005800**	1,8÷2,1	500
FL00000005900	**FL00000006000**	2,1÷2,5	500

MATERIAL
ABS (Acrylonitrile butadiene styrene)

COLOUR
(NE) Black

NOTES
On request also available for panel thickness 1,8÷3,3 - 3,3÷4,8 - 4,8÷6,3 mm.

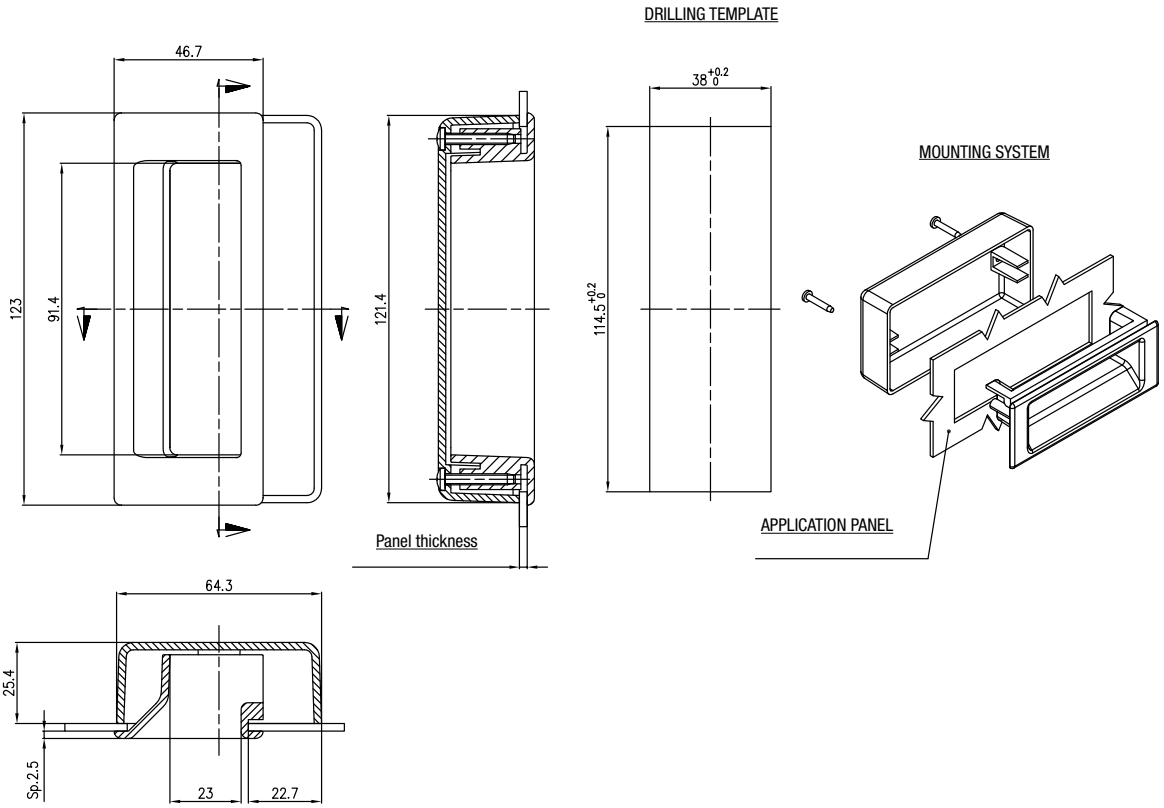

Code (NE)	Panel thickness	Package (pcs)
FL00000006100	1÷1,8	150

MATERIAL - SURFACE TREATMENT

Grip:	EN-AW-6060 (Aluminium) natural anodized
Support:	EN-AW-6063 (Aluminium) natural anodized EN-AW-6063 (Aluminium) black anodized
Cover cup support::	TMP (Thermoplastic) black TMP (Thermoplastic) light grey
Cover cup grip::	TMP (Thermoplastic) black

NOTES

Tubular handles are supplied unassembled with a grip (including two caps), two supports (including one cap each), and a grub screw ISO 4766-14H.
For the recommended maximum spacing, consult the table item A Max.
For high handle lengths or stress, other mounting supports can be inserted, supplied unassembled and to be ordered separately.

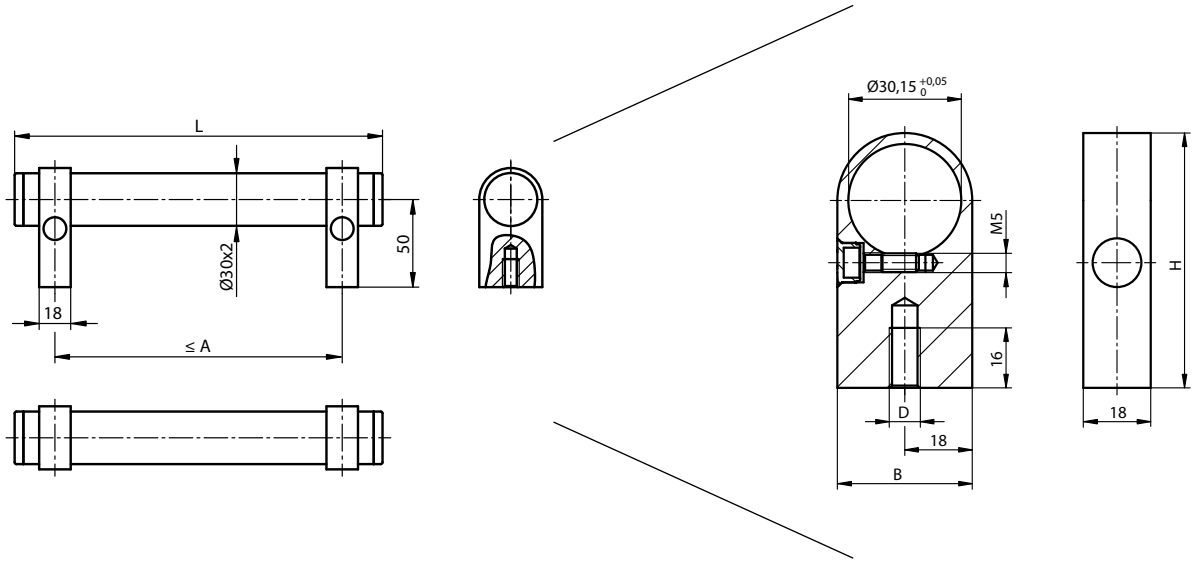

Code with support natural anodized	Code with support black anodized	A (max)	B	D	H	L	Load bearing capacity (N)	Package (pcs)
KP10182503011	**KP10182503012**	220	36	M8	68	250	1.000	1
KP10183003011	**KP10183003012**	270	36	M8	68	300	1.000	1
KP10184003011	**KP10184003012**	370	36	M8	68	400	1.000	1
KP10185003011	**KP10185003012**	4470	36	M8	68	500	1.000	1
KP10186003011	**KP10186003012**	570	36	M8	68	600	1.000	1

MATERIAL - SURFACE TREATMENT

Grip: EN-AW-6060 (Aluminium) rectified and natural anodized
EN-AW-6060 (Aluminium) black knurled plastic coating

Support: TMP (Glass-filled thermoplastic) black

NOTES

The side supports for the handle have 4 interlocking crossbars where the tube attaches. When the connection hose is pressed in, they are scraped and ensure perfect positioning.
The black galvanized mounting screws are supplied with compatible washers and nuts.
Mounting the front side.

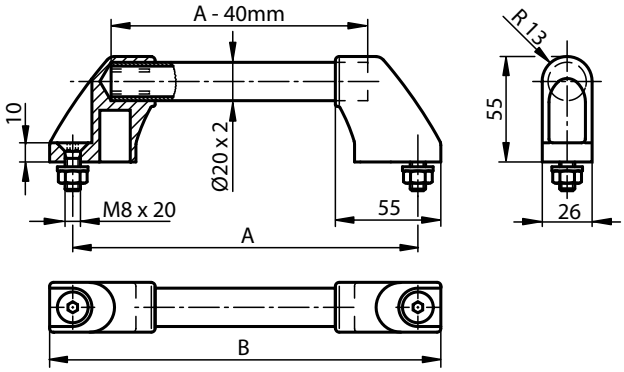

Code aluminium natural anodized	Code plastic coating black	A	B	Load bearing capacity (N)	Package (pcs)
KP0210180	**KP02101803**	180	204	500	1
KP0210200	**KP02102003**	200	224	500	1
KP0210250	**KP02102503**	250	274	500	1
KP0210300	**KP02103003**	300	324	500	1
KP0210350	**KP02103503**	350	374	500	1
KP0210400	**KP02104003**	400	424	500	1
KP0210500	**KP02105003**	500	524	500	1
KP0210600	**KP02106003**	600	624	500	1

TUBULAR HANDLE
carbon

MATERIAL - FINISH

Grip: CFK (Carbon-filled thermoplastic)

Support: AISI304 (Stainless steel) polished

NOTE

To attach the tubular handles shape A, stainless steel cap screws DIN EN ISO 4762 can be used.
To attach the tubular handles shape B, stainless steel cap screws DIN EN ISO 4017 can be used.

Ⓐ

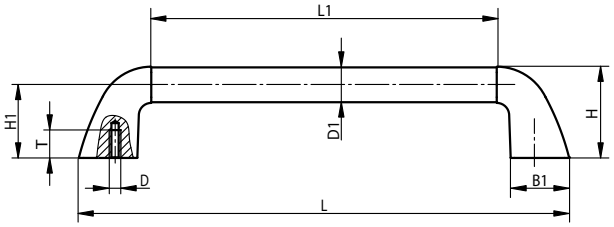

Ⓑ

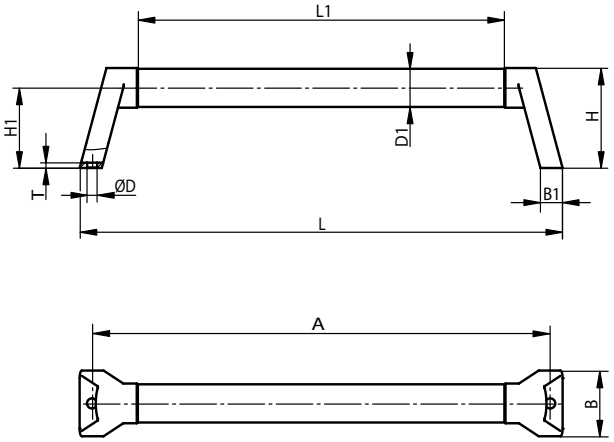

Code	Shape	A	B	B1	D	D1	H	H1	L	L1	T	Load bearing capacity (N)	Package (pcs)
KP0781250251	A	250	34,8	41,6	M6	25	64	51	301	198	20	1.000	1
KP0781300251	A	300	34,8	41,6	M6	25	64	51	351	248	20	1.000	1
KP0781350251	A	350	34,8	41,6	M6	25	64	51	401	298	20	1.000	1
KP0781350351	A	350	47,7	55	M6	35	84	66	424	286	20	1.000	1
KP0781400351	A	400	47,7	55	M6	35	84	66	474	336	20	1.000	1
KP0781450351	A	450	47,7	55	M6	35	84	66	524	386	20	1.000	1
KP0782250251	B	250	43	14,5	Ø 6,6	25	65,5	52,5	266	190	3,5	1.000	1
KP0782300251	B	300	43	14,5	Ø 6,6	25	65,5	52,5	316	240	3,5	1.000	1
KP0782350251	B	350	43	14,5	Ø 6,6	25	65,5	52,5	366	290	3,5	1.000	1
KP0782350351	B	350	57,7	18,6	Ø 6,6	35	85,5	67,5	371	270	4,5	1.000	1
KP0782400351	B	400	57,7	18,6	Ø 6,6	35	85,5	67,5	421	320	4,5	1.000	1
KP0782450351	B	450	57,7	18,6	Ø 6,6	35	85,5	67,5	471	370	4,5	1.000	1

MATERIAL - FINISH
AC (Steel) rectified, brushed, and satin chrome-plated
AC (Steel) powder-coated with black microstructure

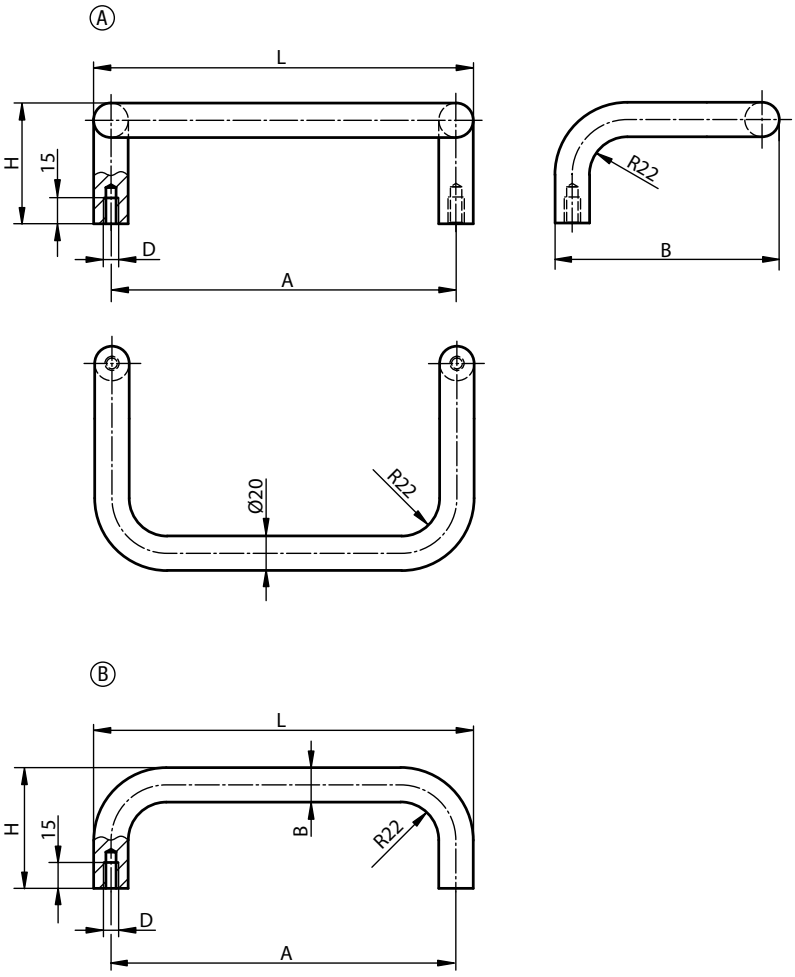

Code satin chrome-plated	Code powder coated black	Shape	A	B	D	H	L	Code powder coated black	Package (pcs)
KP0230200081	**KP0230200082**	A	200	130	M8	70	220	1.000	1
KP0230350081	**KP0230350082**	A	350	130	M8	70	370	1.000	1
KP0230200083	**KP0230200084**	B	200	20	M8	70	220	1.000	1
KP0230250083	**KP0230250084**	B	250	20	M8	70	270	1.000	1
KP0230300083	**KP0230300084**	B	300	20	M8	70	320	1.000	1
KP0230350083	**KP0230350084**	B	350	20	M8	70	370	1.000	1

D-SHAPED HANDLE
glossy chrome-plated

MATERIAL
AC (Steel)

SURFACE TREATMENT
Finely polished with glossy chrome-plating.

NOTES
These d-shaped handles are especially used in the construction of optical equipment; laboratory equipment; audio, visual, and HiFi equipment, and so on.
Le rondelle d'appoggio sono fornite sciolte.
Mounting from the back.

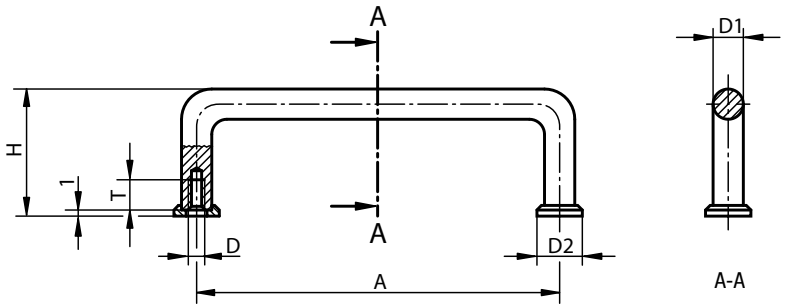

Code	A	D	D1	D2	H	T	Load bearing capacity (N)	Package (pcs)
KP021403203	32	M3	5	8	21	6	1.000	1
KP021404203	42	M3	5	8	25	6	1.000	1
KP021405503	55	M3	5	8	25	6	1.000	1
KP021407603	76	M3	5	8	25	6	1.000	1
KP021408803	88	M3	5	8	25	6	1.000	1
KP021403204	32	M4	8	12,5	33	8	1.000	1
KP021405504	55	M4	8	12,5	33	8	1.000	1
KP021406404	64	M4	8	12,5	33	8	1.000	1
KP021408804	88	M4	8	12,5	33	8	1.000	1
KP021409604	96	M4	8	12,5	33	8	1.000	1
KP021409804	98	M4	8	12,5	33	8	1.000	1
KP021410204	102	M4	8	12,5	33	8	1.000	1
KP021412004	120	M4	8	12,5	33	8	1.000	1
KP021412804	128	M4	8	12,5	33	8	1.000	1
KP021413604	136	M4	8	12,5	33	8	1.000	1
KP021405505	55	M5	10	15	41	10	1.000	1
KP021408805	88	M5	10	15	41	10	1.000	1
KP021410005	100	M5	10	15	41	10	1.000	1
KP021410205	102	M5	10	15	41	10	1.000	1
KP021411505	115	M5	10	15	41	10	1.000	1
KP021412005	120	M5	10	15	41	10	1.000	1
KP021413605	136	M5	10	15	41	10	1.000	1
KP021418005	180	M5	10	15	41	10	1.000	1
KP021420005	200	M5	10	15	41	10	1.000	1
KP021423505	235	M5	10	15	41	10	1.000	1
KP021425005	250	M5	10	15	41	10	1.000	1

MATERIAL
Grip: PF (Thermosetting)
Bushing: OT58 (Brass)

COLOUR
NE Black

NOTES
Bushing available in other materials and dimensions.
Handle available in other colours.

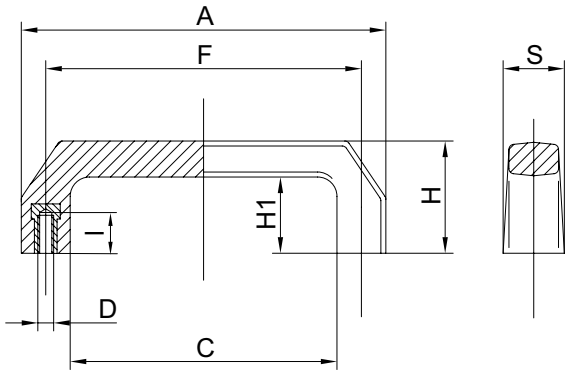

Code NE	A	H	C	D	I	F	H1	S	Package (pcs)
SR0EM60140800	140	48	90	M8	16	117	30	30	25
SR0EM60160800	160	54	100	M8	16	132	34	34	25

MATERIAL
Grip: PF (Thermosetting)
Bushing: OT58 (Brass)

COLOUR
NE Black

NOTES
Bushing available in other materials and dimensions.
Handle available in other colours.

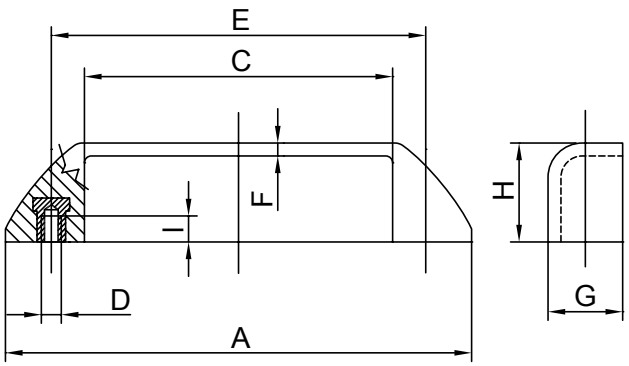

Code	A	H	C	D	I	E	F	G	Package (pcs)
SR0EM65136600	136	19	88	M6	9	95	3,5	24	50

BRIDGE HANDLE
BFC - MNG1

MATERIAL
Grip: PA6-CV30% (Glass-filled polyamide)
Bushing: OT58 (Brass)

COLOUR
NE Black

NOTES
Bushing available in other materials and dimensions.
Handle available in other colours.

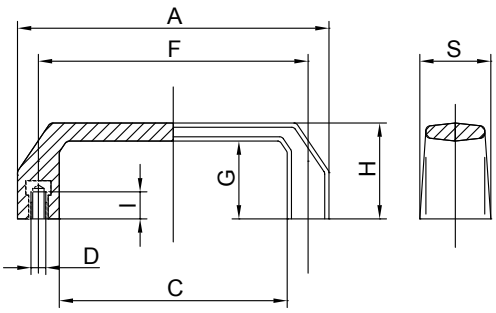

Code NE	A	H	C	D	I	F	G	S	Package (pcs)
SR0EMNG120500	120	37	88	M5	9	105	28	27	50
SR0EMNG120600	120	37	88	M6	9	105	28	27	50
SR0EMNG135500	135	40	97	M5	9	117	33	30	50
SR0EMNG135600	135	40	97	M6	13	117	33	30	50
SR0EMNG135800	135	40	97	M8	13	117	33	30	50

BRIDGE HANDLE
SR0EM-F
BFC - MNG3

MATERIAL
Grip: PA6 (Polyamide)
Bushing: OT58 (Brass)

COLOUR
NE Black

NOTES
Bushing available in other materials and dimensions.
Handle available in other colours.

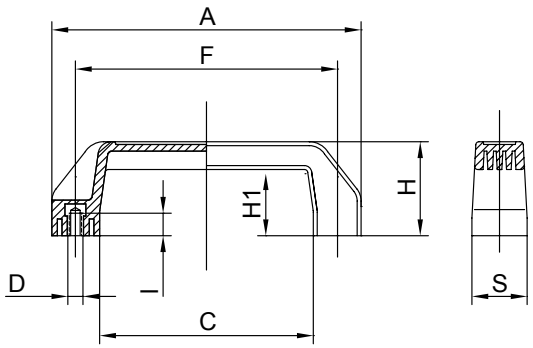

Code NE	A	H	C	D	I	F	H1	S	Package (pcs)
SR0EMNG360600	158	50	101	M6	13	130	34	28	50
SR0EMNG360800	158	50	101	M8	15	130	34	28	50
SR0EMNG361000	158	50	101	M10	16	130	34	28	50

MATERIAL - SURFACE TREATMENT
Grip: PA6-CV30% (Glass-filled polyamide)
Piun: CI 4.8 (Steel) white galvanized

COLOUR
NE Black

NOTES
Pin available in other materials and dimensions.
Handle available in other colours.

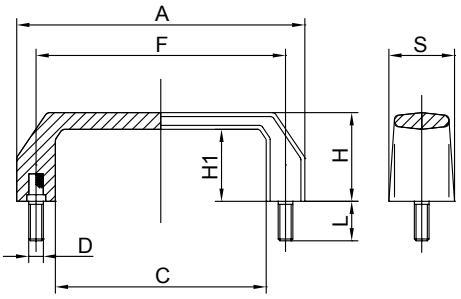

Code NE	A	H	C	D	L	F	H1	S	Package (pcs)
SR0EMNG135610	135	41	99	M6	10	117	33	30	50
SR0EMNG135612	135	41	99	M6	12	117	33	30	50
SR0EMNG135615	135	41	99	M6	15	117	33	30	50
SR0EMNG135620	135	41	99	M6	20	117	33	30	50
SR0EMNG135810	135	41	99	M8	10	117	33	30	50
SR0EMNG135815	135	41	99	M8	15	117	33	30	50
SR0EMNG135820	135	41	99	M8	20	117	33	30	50
SR0EMNG135825	135	41	99	M8	25	117	33	30	50

BRIDGE HANDLE
FLP - MNG2
SR0EM-H

MATERIAL
PA6 (Polyamide)

COLOUR
NE Black

NOTES
Available in materials with greater thermal seal and in other colours.

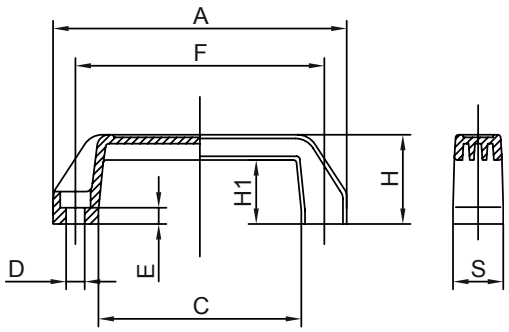

Code NE	A	H	C	D	E	F	H1	S	Package (pcs)
SR0EMNG213500	135	41	95	9	7	117	32	24	100
SR0EMNG219500	195	52	152	9	7	175	40	28	50

MATERIAL
PA6 (Polyamide)

COLOUR
NE Black

NOTES
Available in materials with greater thermal seal and in other colours.

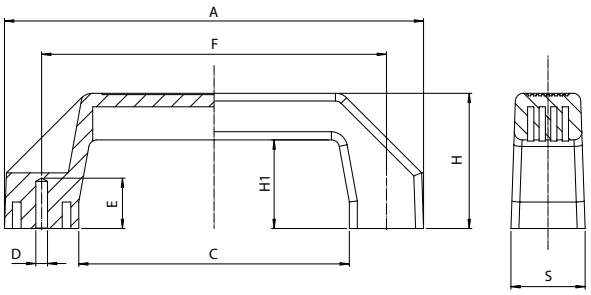

Code NE	A	H	C	D	E	F	H1	S	Package (pcs)
SR0EMNG316000	160	50	101	4,4	19	130	34	28	50

SR0EM-J KNOB

MATERIAL
PVC (Polyvinyl chloride)

COLOUR
NE Black

NOTES
Available in other colours.

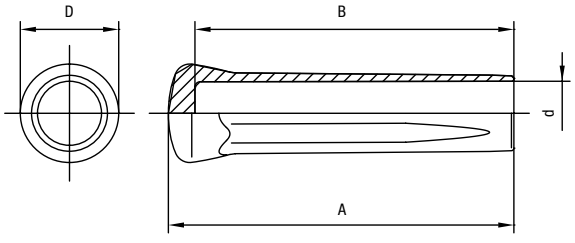

Code NE	A	D	d	B	Package (pcs)
SR0EMP2000D18	115	31	18	110	100
SR0EMP2000D20	115	31	20	110	100
SR0EMP2000D22	115	31	22	110	100
SR0EMP2000D25	125	36	24	120	100
SR0EMP2000D26	125	36	26	120	100
SR0EMP2000D28	125	36	27	120	100
SR0EMP2000D29	125	36	29	120	100
SR0EMP2000D30	130	42	30	125	100
SR0EMP2000D33	130	42	33	125	100

12 HINGES

Prominent hinge
pag. 12.1

Lift-off hinge
pag. 12.11

Torque hinge
pag. 12.13

Concealed hinge
pag. 12.17

Spring hinge
pag. 12.20

Positionable hinge
pag. 12.21

270° PROMINENT SCREW-ON HINGE WITH HOLES

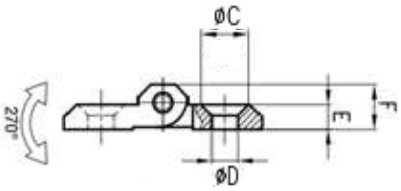

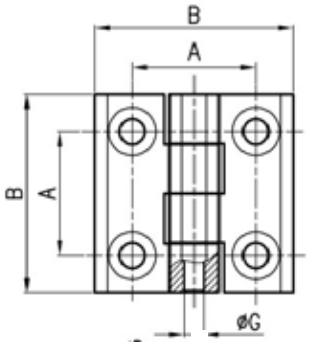

Zama

MATERIAL - SURFACE TREATMENT

Flanges: ZAMA (Die-cast zinc) chrome
ZAMA (Die-cast zinc) powder coated
Pin: AISI303 (Stainless steel)

COLOUR

CR Glossy chrome
NE Black

Stainless steel

MATERIAL - SURFACE TREATMENT

Flanges: AISI316 (Stainless steel)
Pin: AISI316 (Stainless steel)

NOTES

The thickness of the paint has not been calculated.

Code CR	Code NE	Code Inox	A	B	C	D	E	F	G	Package (pcs) CR	Package (pcs) NE	Package (pcs) Inox
CRZSE40040021	**CRZSE40040040**	**CR7SE40040000**	25	40	9,6	5,2	5	9	4	300	300	200
CRZSE50050021	**CRZSE50050040**	**CR7SE50050000**	30	50	12,4	6,2	6	11,5	6	150	150	150
CRZSE60060021	**CRZSE60060040**	**CR7SE60060000**	36	60	13	8,4	8	15	8	100	150	100
-	**CRZSE60060A40**	-	36	60	13	6,2	6	11,5	6	-	100	-
CRZSE64064021	**CRZSE64064040**	-	40	64	13	6,5	6	11,5	6	200	200	-

CR00E-01 180° PROMINENT SCREW-ON HINGE WITH THREADED PINS

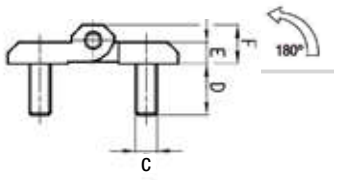

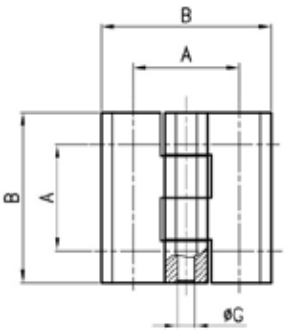

MATERIAL - SURFACE TREATMENT

Flanges: ZAMA (Die-cast zinc) chrome
ZAMA (Die-cast zinc) powder coated
Pin: AISI303 (Stainless steel)
Threaded pins: AISI303 (Stainless steel)

COLOUR

CR Glossy chrome
NE Matt black

NOTES

The thickness of the paint has not been calculated.

Code CR	Code NE	A	B	C	D	E	F	G	Package (pcs)
-	**CRZPE40040040**	25	40	M5	12	5	9	4	200
CRZPE50050021	**CRZPE50050040**	30	50	M6	12	6	11,5	6	100
-	**CRZPE60060040**	36	60	M8	14	8	15	8	100

MATERIAL
Flanges: PA-CV (Glass-filled polyamide)
Pin: AISI303 (Stainless steel)
Threaded pins: Steel white galvanized

COLOUR
NE Black

With hole

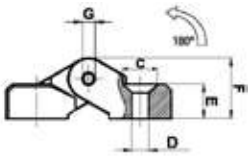

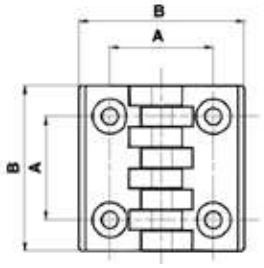

With studs

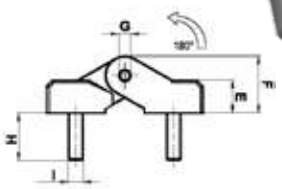

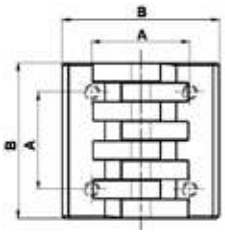

Code with hole	Code with studs	A	B	C	D	E	F	G	H	I	Package (pcs)
CRSSE320320N8	-	20	32	8,5	4,5	7	10,5	3	-	-	10
CRSSE480480N8	**CRSPE480480N8**	30	48	12,5	6,5	10,5	15,5	5	15	M5	10
-	**CRSPE480481N8**	30	48	-	-	10,5	15,5	5	15	M6	10
CRSSE640641N8	**CRSPE640641N8**	40	64	12,5	6,5	13	19	5	20	M6	10
-	**CRSPE640642N8**	40	64	-	-	13	19	5	20	M8	10
CRSSE960960N8	-	60	96	16,5	8,5	16	24	8	-	-	10
CRSSE960961N8	-	60	96	20,5	10,5	16	24	8	-	-	10
-	**CRSPE960960N8**	60	96	-	-	19	28,5	8	20	M8	10
-	**CRSPE960961N8**	60	96	-	-	19	28,5	8	20	M10	10

MATERIAL - SURFACE TREATMENT
Flanges: ZAMA (Die-cast zinc) black powder coated
Pin: AISI303 (Stainless steel)
Threaded pins: Stainless steel

NOTES
On request also available in 316 Stainless steel.
The thickness of the paint has not been calculated.

With hole

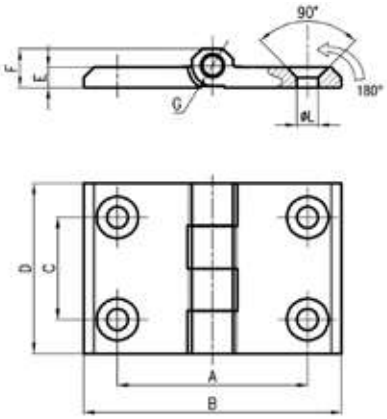

With studs

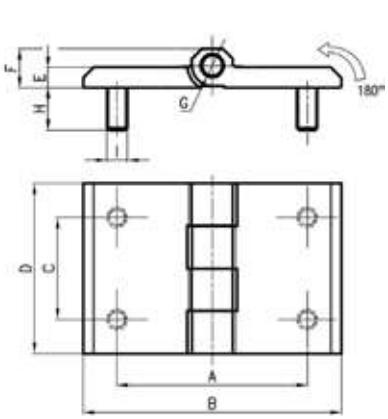

Code with holes	Code with studs	A	B	C	D	E	F	G	H	L	I	Package (pcs) with holes	Package (pcs) with studs
CRZSE76050040	**CRZPE76050040**	56	76	30	50	6	11,5	6	12,5	6,3	M6	150	100
CRZSEC0060040	**CRZPEC0060040**	88	120	30	60	8	15	8	12,5	6,8	M8	50	50

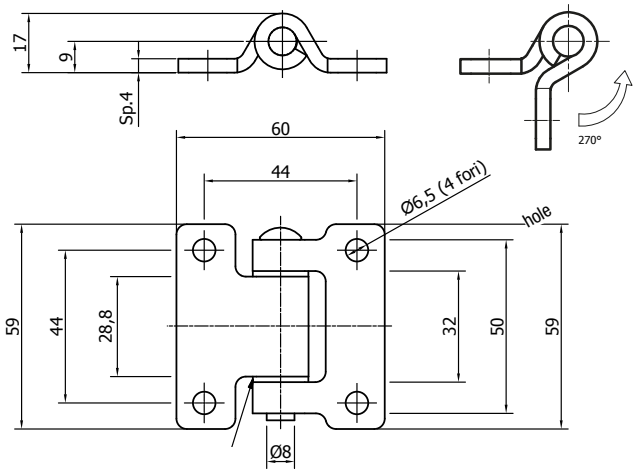

Anti-seize bushing

Steel
MATERIAL - SURFACE TREATMENT
Flanges: Steel white galvanized
Steel black powder coated
Pin: AISI304 (Stainless steel) polished
Anti-seize bushing: PA (Polyamide) white

Stainless steel
MATERIAL - SURFACE TREATMENT
Flanges: AISI304 (Stainless steel) polished
Pin: AISI304 (Stainless steel) polished
Anti-seize bushing: PA (Polyamide) white

NOTES
The thickness of the paint has not been calculated.

Code white galvanized	Code black powder coated	Code Stainless steel	Package (pcs)
CR5CE60059001	CR5CE60059040	CR6CE60059000	100

CR00E-05 PROMINENT SCREW-ON HINGE

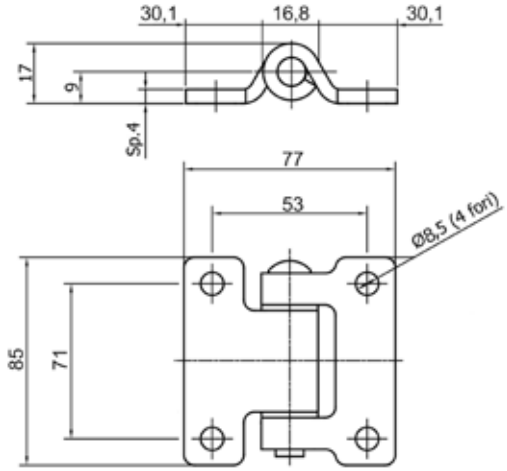

Steel
MATERIAL - SURFACE TREATMENT
Flanges: Steel white galvanized
Pin: AISI304 (Stainless steel)

Stainless steel
MATERIAL - SURFACE TREATMENT
Flanges: AISI304 (Stainless steel)
Pin: AISI304 (Stainless steel)

Codice white galvanized	Codice Stainless steel	Package (pcs)
CR5CE77085001	CR6CE77085000	1

Steel

MATERIAL - SURFACE TREATMENT

Flanges: Steel white galvanized
Steel black powder coated
Pin: AISI304 (Stainless steel) polished
Anti-seize bushing: PA (Polyamide) white

Stainless steel

MATERIAL - SURFACE TREATMENT

Flanges: AISI304 (Stainless steel) polished
Pin: AISI304 (Stainless steel) polished
Anti-seize bushing: PA (Polyamide) white

NOTES
The thickness of the paint has not been calculated.

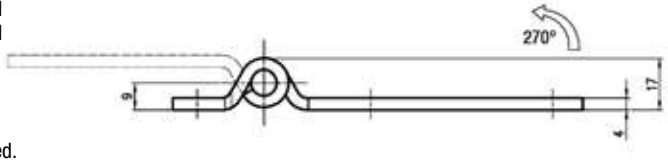

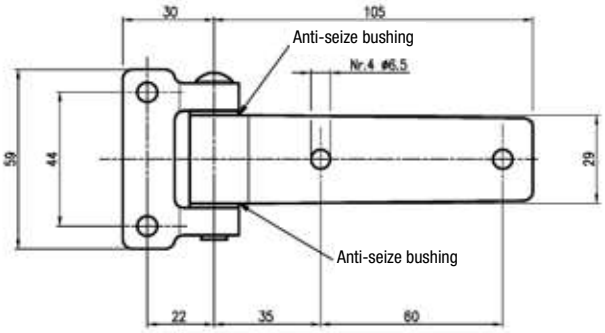

Code white galvanized	Code black powder coated	Code Stainless steel	Package (pcs)
CR5CED5059001	**CR5CED5059040**	**CR6CED5059000**	50

270° PROMINENT SCREW-ON HINGE | CR00E-07

MATERIAL - SURFACE TREATMENT

Flanges and pin: Steel white galvanized
Flanges and pin: Steel black powder coated
Anti-seize bushing: PA (Polyamide) neutral

NOTES
The thickness of the paint has not been calculated.

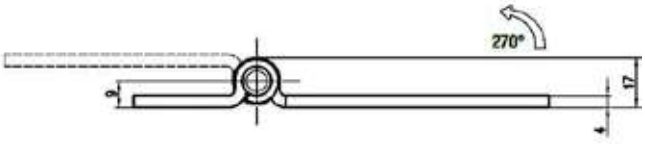

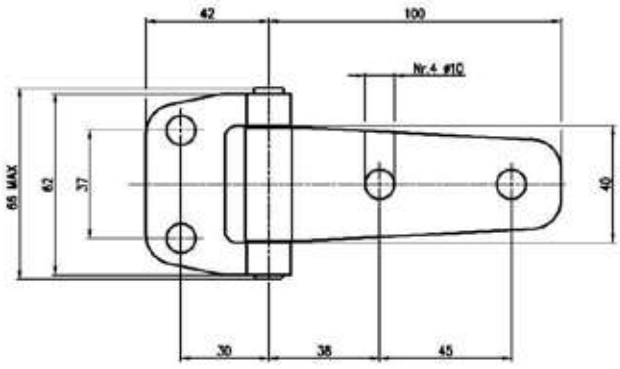

Codice white galvanized	Code black powder coated	Package (pcs)
CR5CEE2062001	**CR5CEE2062040**	50

MATERIAL - SURFACE TREATMENT
Flanges: Steel white galvanized
Flanges: Steel glossy black painted
Pin: Stainless steel

NOTES
The thickness of the paint has not been calculated.

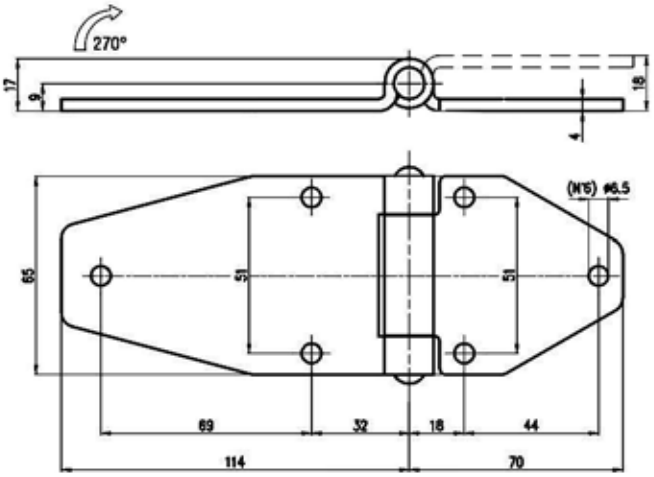

Code white galvanized	Code black powder coated	Package (pcs)
CR5CEI4065001	CR5CEI4065040	30

CR00E-09 270° PROMINENT SCREW-ON HINGE

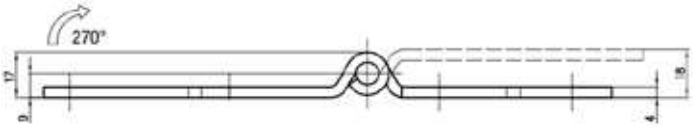

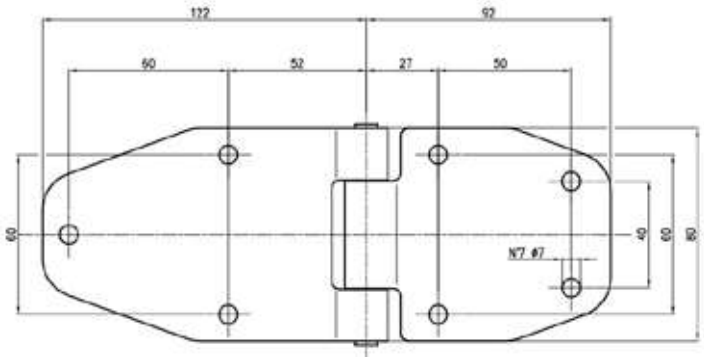

Steel
MATERIAL - SURFACE TREATMENT
Flanges: Steel white galvanized
Steel glossy black painted

Stainless steel
MATERIAL - SURFACE TREATMENT
Flanges: AISI304 (Stailess steel) polished
Pin: AISI304 (Stainless steel)

NOTES
The thickness of the paint has not been calculated.

Code white galvanized	Code black powder coated	Codice Stainless steel	Package (pcs) white galvanized	Package (pcs) black powder coated	Package (pcs) Stainless steel
CR5CEN4060001	CR5CEN4060040	CR6CEN4060000	200	25	25

MATERIAL - FINISH
Flanges: ZAMA (Die-cast zinc) black powder coated
Pin: Stailess steel
Anti-seize bushing: PA (Polyamide) black

NOTES
The thickness of the paint has not been calculated.

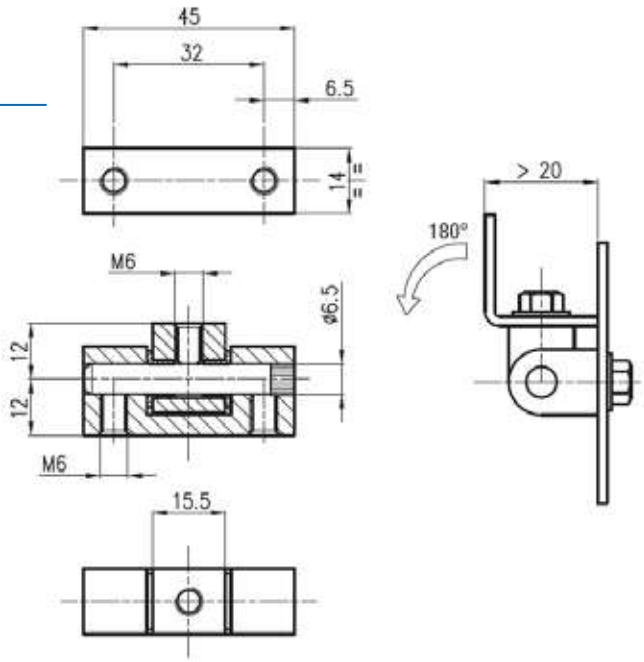

Code	Package (pcs)
CRZ6E14045040	100

MATERIAL - FINISH
Flanges: ZAMA (Die-cast zinc) black powder coated
Pin: ZAMA (Die-cast zinc) black powder coated
Anti-seize bushing: PA (Polyamide) black

NOTES
Screws not supplied.
Max. screw lenght = door thickness+5mm
The thickness of the paint has not been calculated.

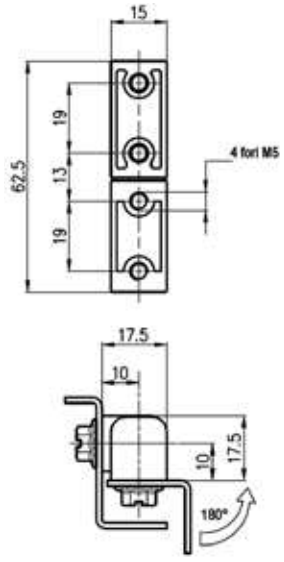

Code	Package (pcs)
CRZ6E15062040	50

180° PROMINENT HINGE
knurl pin

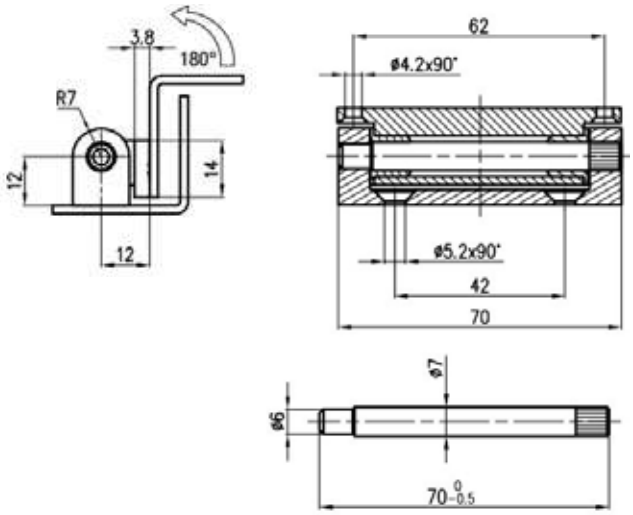

MATERIAL - FINISH

Flanges:	Aluminium anodizing
Pin:	Polished Stainless steel
Anti-seize bushing:	PA (Polyamide) white

NOTES
Knurl pin.
On demande avaible also with threaded pin (M7).

Code	Package (pcs)
CR1SE14070000	50

CR00E-13 180° PROMINENT ANGULAR HINGE

TYPE A

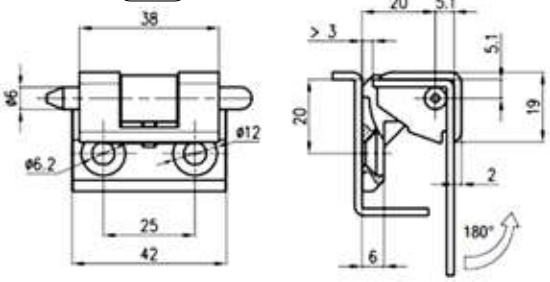

Drilling template

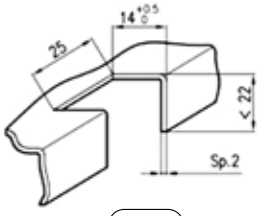

TYPE B

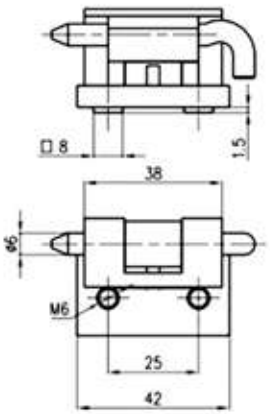

Type A
MATERIAL - FINISH

Base, support, pin:	ZAMA (Die-cast zinc) chrome plated
Base, support, pin:	ZAMA (Die-cast zinc) painted

COLOUR
CR Bright chrome plated
NE Glossy black

Type B
MATERIAL - FINISH

Base, support:	ZAMA (Die-cast zinc) painted
Pin:	Steel burnished

COLOUR
NE Glossy black

NOTES
The thickness of the paint has not been calculated.

Code CR	Code NE	Type	Package (pcs)
CRZSE19042021	**CRZSE19042040**	A	200
-	**CRZ6E19042040**	B	100

MATERIAL - SURFACE TREATMENT
Base: ZAMA (Die-cast zinc) black powder coated
Support: ZAMA (Die-cast zinc) black powder coated
Pin: Cl. 4.8 white galvanized

NOTES
The thickness of the paint has not been calculated.

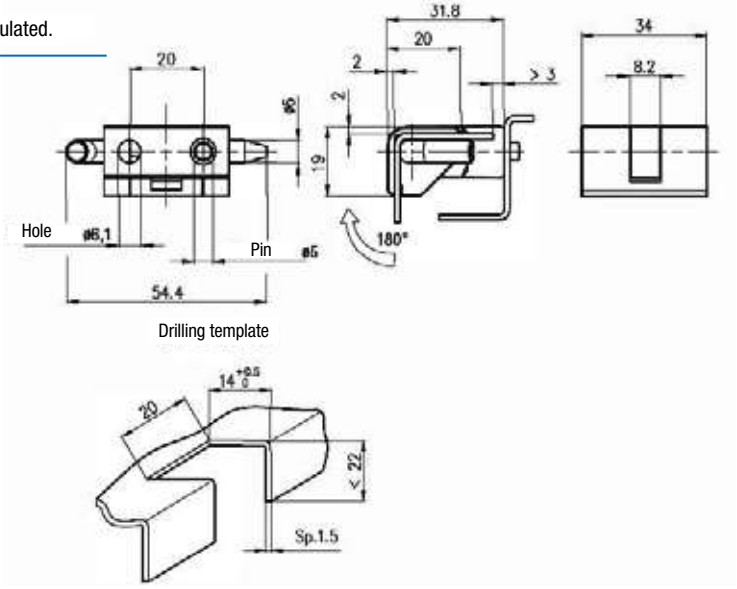

Drilling template

Code	Package (pcs)
CRZSE19034040	200

180° PROMINENT ANGULAR HINGE | CR00E-12

Zama
MATERIAL - SURFACE TREATMENT
Base, support: ZAMA (Die-cast zinc) chromated
Base, support: ZAMA (Die-cast zinc) powder coated
Pin: Cl. 4.8 white galvanized

COLOUR
CR Glossy chrome
NE Black

Stainless steel
MATERIAL
Base, support: AISI316 (Stainless steel)
Pin: AISI316 (Stainless steel)

NOTES
Screw not supplied.
On request also available with 43mm long pin.
The thickness of the paint has not been calculated.

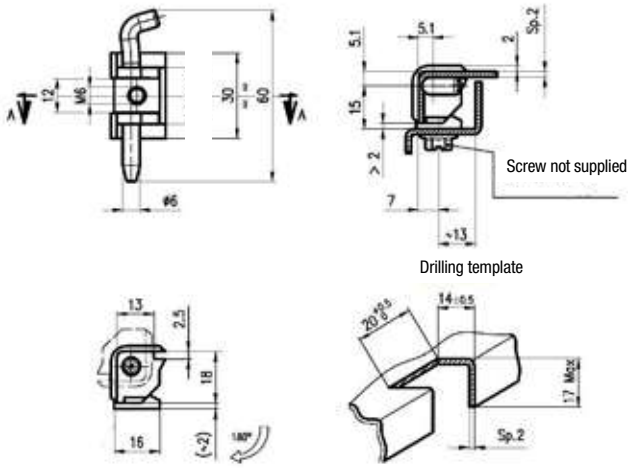

Drilling template

Code CR	Code NE	Code Stainless steel	Package (pcs) CR	Package (pcs) NE	Package (pcs) Inox
CRZ6E17030021	**CRZ6E17030040**	**CR76E17030000**	400	400	125

Section A-A

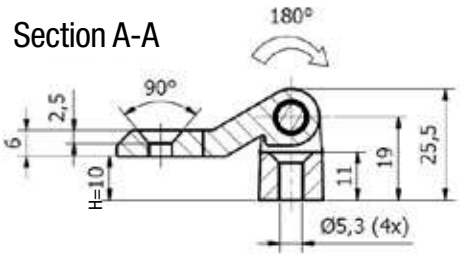

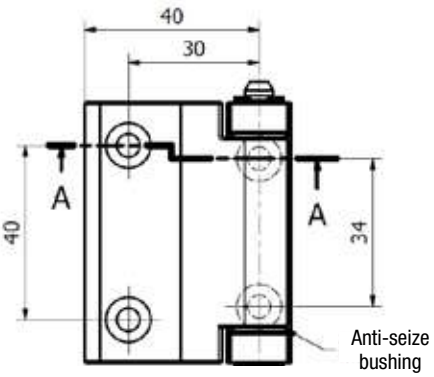

MATERIAL - FINISH
Flanges: ZAMA (Die-cast zinc) chromated
Flanges: ZAMA (Die-cast zinc) powder coated
Pin e seeger: Stailess steel
Anti-seize bushing: PA (Polyamide) black

COLORE
CR Glossy chrome
NE Black

NOTES
The thickness of the paint has not been calculated.
On request also available in other thicknesses: H=0, H=4, H=6

Code CR	Code NE	Package (pcs)
CRZSE19060021	CRZSE19060040	50

CR00E-15 180° PROMINENT HINGE
plastic

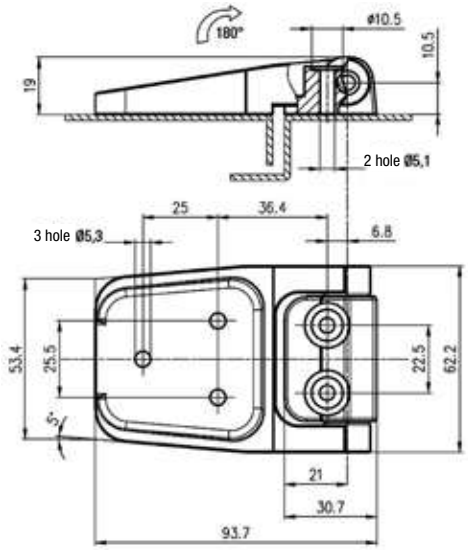

MATERIAL - SURFACE TREATMENT
Flanges: PA-CV30% (Glass-filled polyamide)
Pin: Steel white galvanized

COLOUR
NE Black

Code NE	Package (pcs)
CRSCE930620N8	50

MATERIAL - SURFACE TREATMENT
Flanges: Steel white galvanized
Pin: Steel white galvanized

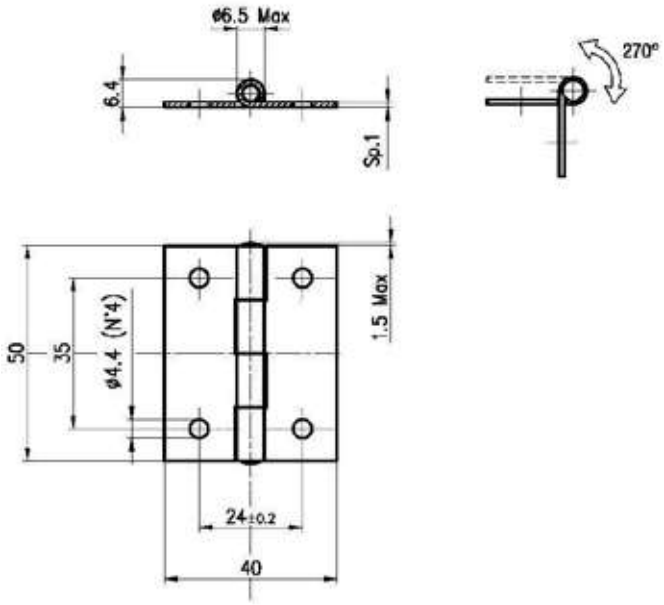

Code	Package (pcs)
CR5CE40050001	500

MATERIAL
Flanges: PA (Polyamide)
Pin: Stainless steel

COLOUR
(NE) Black

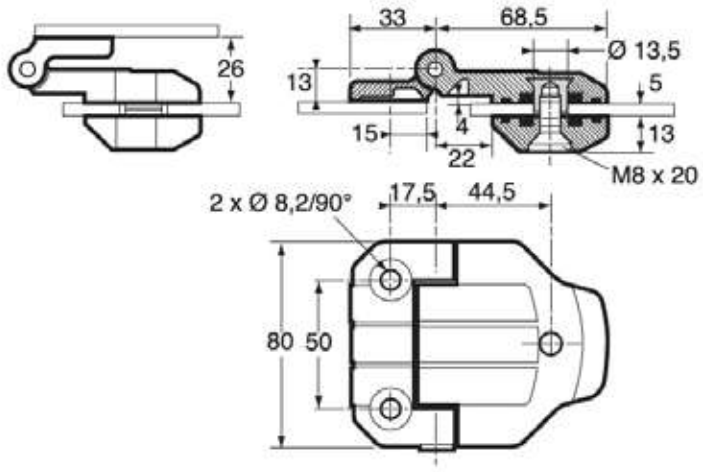

Code (NE)	Package (pcs)
CR5SEA10800N8	1

240° LIFT-OFF HINGE
stainless steel

MATERIAL
Flanges: AISI304 (Stainless steel)
Pin: AISI304 (Stainless steel)

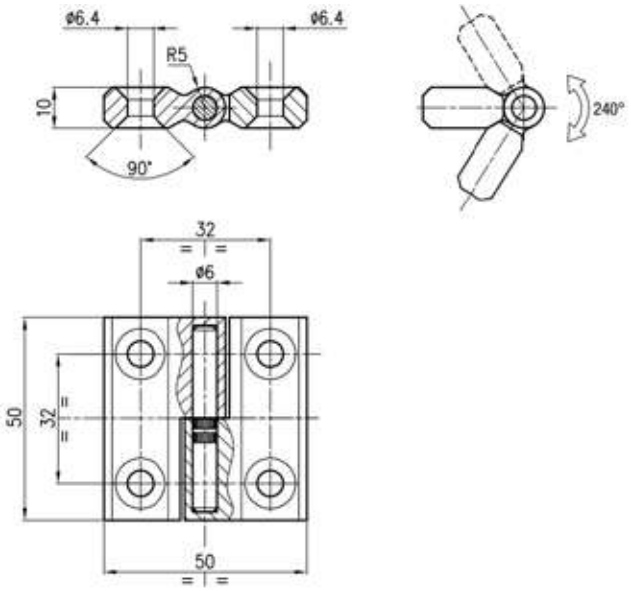

Code	Package (pcs)
CR6SS50050000	25

180° LIFT-OFF HINGE

Right version

Left version

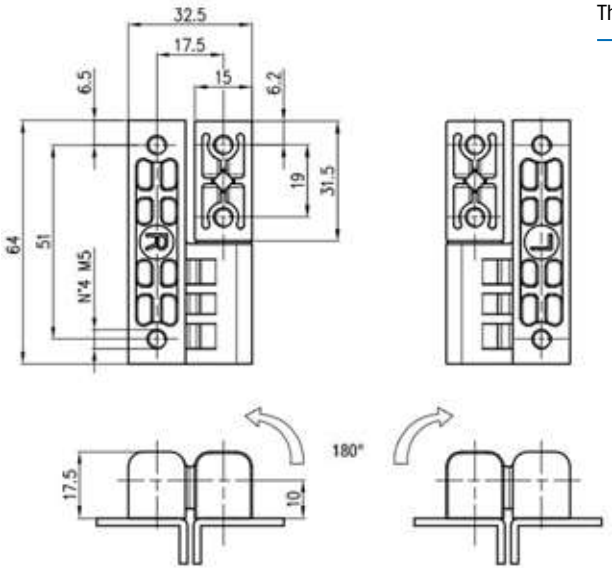

MATERIAL - FINISH
Flanges: ZAMA (Die-cast zinc) black powder coated
Pin: ZAMA (Die-cast zinc)
Anti-seize bushing: PA (Polyamide)

NOTES
The thickness of the paint has not been calculated.

Code	Version	Package (pcs)
CRZ6S32064040	DX	50
CRZ6S32064A40	SX	50

MATERIAL - FINISH
Flanges: ZAMA (Die-cast zinc)
black powder coated
Pin: AISI304 (Stainless steel)
Threaded pins: Stainless steel

NOTES
The thickness of the paint has not been calculated.

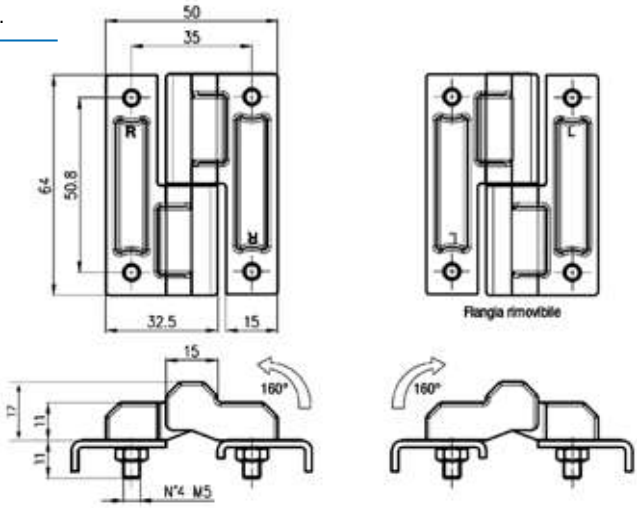

Right version Left version

Code	Version	Package (pcs)
CRZPS50064040	DX	50
CRZPS50064A40	SX	50

LIFT-OFF HINGE plastic | CR00S-23

MATERIAL
Flanges: PA (Polyamide)
Pin: AISI304 (Stainless steel)

COLOUR
NE Black

NOTES
The image represents the righthand side.

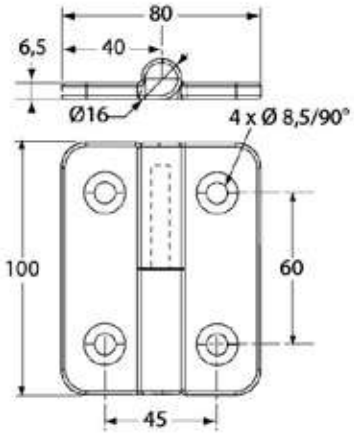

Code NE	Version	Package (pcs)
CRSSS801000N8	DX	10
CRSSS80100AN8	SX	10

180° LIFT-OFF HINGE WITH HOLES

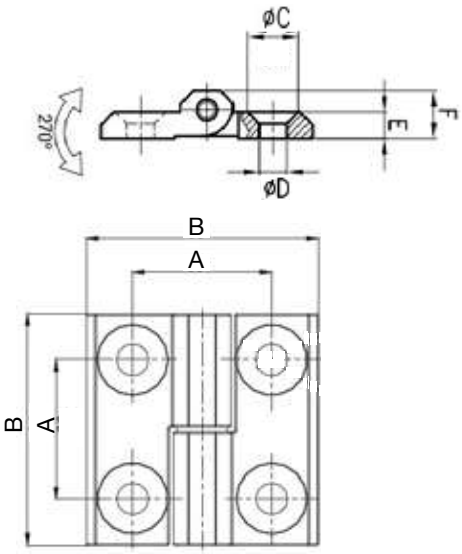

MATERIAL - FINISH
Flanges: ZAMA (Die-cast zinc) black powder coated
Pin: AISI303 (Inox)
Washer: PA (Poliammide) nera

NOTES
The thickness of the paint has not been calculated.

Code SX	Code DX	A	B	C	D	E	F	Package (pcs)
CRZSS40040040	**CRZSS40040A40**	25	40	11,5	5,2	5	9	50
CRZSS50050040	**CRZSS50050A40**	30	50	13,5	6,4	6	11,5	50
CRZSS60060040	**CRZSS60060A40**	36	60	18,3	8,3	8	15	50

270° TORQUE HINGE WITH HOLES

MATERIAL - FINISH
Flanges: ZAMA (Die-cast zinc) black powder coated
Pin: AISI304 (Stainless steel))

NOTES
The thickness of the paint has not been calculated.
20.000 cycles static torque stay (±20% of torque specification).

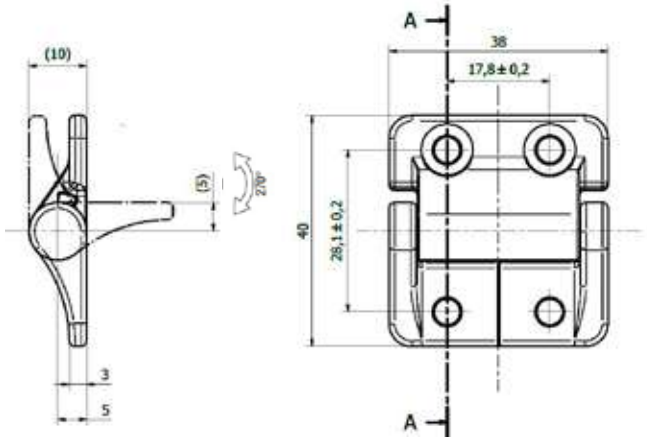

Section A-A

Code	Symmetric Nm	Package (pcs)
CRZCF40038040	0,9	50
CRZCF40038A40	1,8	50
CRZCF40038B40	2,3	50

MATERIAL - FINISH
Flanges: ZAMA (Die-cast zinc) black powder coated
Pin: AISI304 (Stainless steel)
Threaded pins: AISI304 (Stainless steel)

NOTES
The thickness of the paint has not been calculated.
On demande avaible also with: 1,4-1,8-2,3 torque Nm.
25.000 cycles static torque stay (±20% of torque specification).

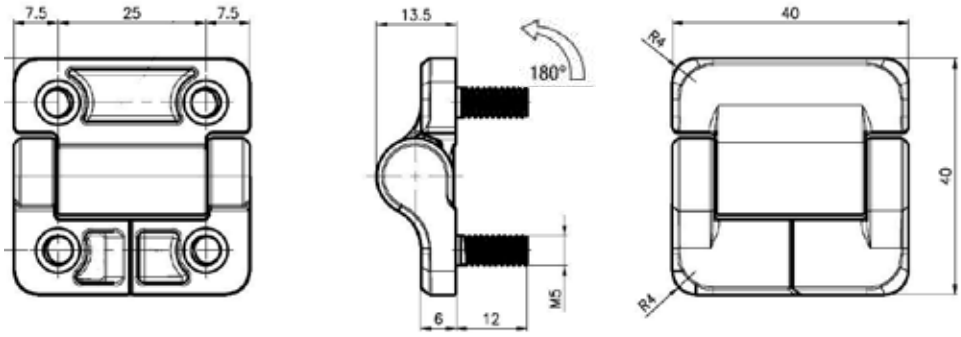

Code	Symmetric Nm	Package (pcs)
CRZPF40040040	0,9	50

270° TORQUE HINGE WITH HOLES | CR00F-27

MATERIAL - FINISH
Flanges: ZAMA (Die-cast zinc) black powder coated
Pin: AISI304 (Stainless steel)

NOTES
The thickness of the paint has not been calculated.
On demande avaible also with: 2,3-3,4 torque Nm.
25.000 cycles static torque stay (±20% of torque specification).

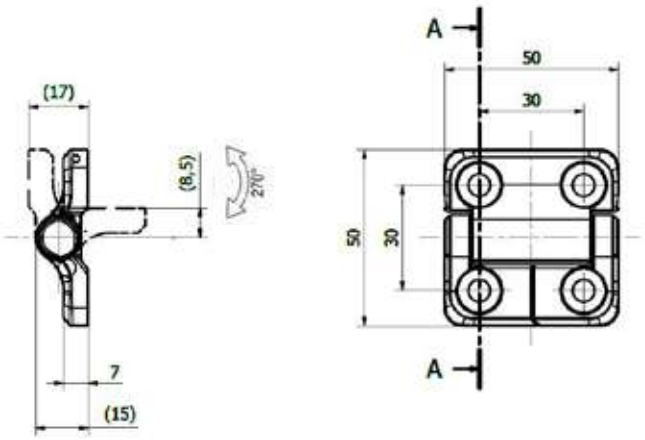

Code	Symmetric Nm	Package (pcs)
CRZSF50050040	1,8	50

MATERIAL -FINISH
Flanges: ZAMA (Die-cast zinc) black powder coated
Pin: AISI304 (Stainless steel)

NOTES
The thickness of the paint has not been calculated.
On demande avaible also with: 1,36-2,26-3,16 torque Nm.
25.000 cycles static torque stay (±20% of torque specification).

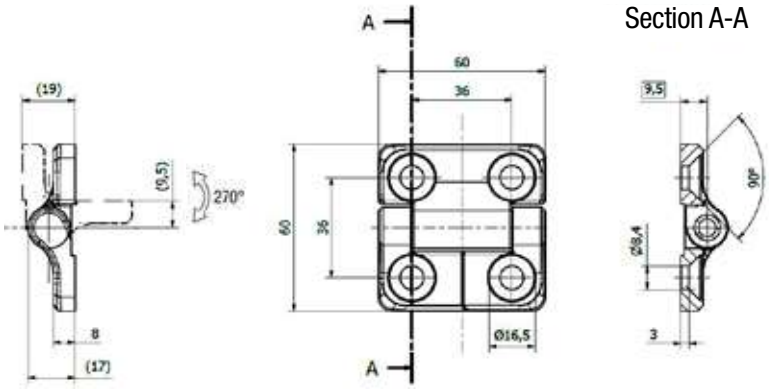

Code	Symmetric Nm	Package (pcs)
CRZSF60060040	4,07	50

MATERIAL - FINISH
Flanges: ZAMA (Die-cast zinc) black powder coated
Pin: AISI304 (Stainless steel)

NOTES
The thickness of the paint has not been calculated.
On demande avaible also with asymmetric torque.

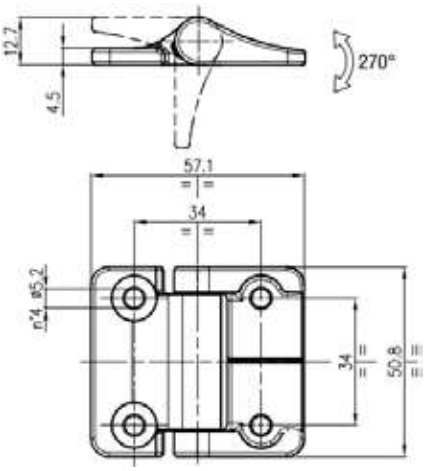

Code	Symmetric Nm	Package (pcs)
CRZCF57050040	Libera	50
CRZCF57050A40	0,9	50
CRZCF57050B40	1,2	100
CRZCF57050C40	1,8	50
CRZCF57050D40	2,3	50
CRZCF57050E40	3,4	50
CRZCF57050F40	4,5	50

MATERIAL
Flanges: PA-CV30% (Glass-filled polyamide)
Pin: PC (polycarbonate) neutral
Screw M6: Stainless steel
Nut M6: Stainless steel

COLOUR
NE Black

NOTES
On demande avaible also with asymmetric torque.

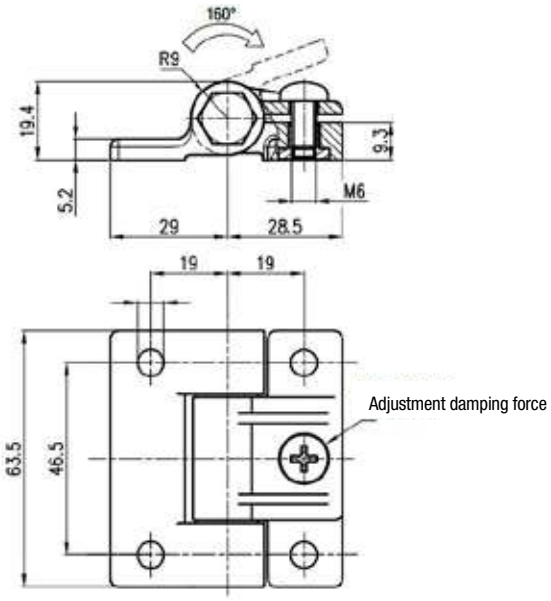

Code (NE)	Package (pcs)
CRSCF570630N8	200

MATERIAL - SURFACE TREATMENT
Flanges: POM (Acetyl)
Washer: POM (Acetyl)
Threaded pins: POM (Acetyl)
Nuts: Steel white galvanized

COLOUR
NE Black

NOTES
Nr. 4 nuts for each assembly.

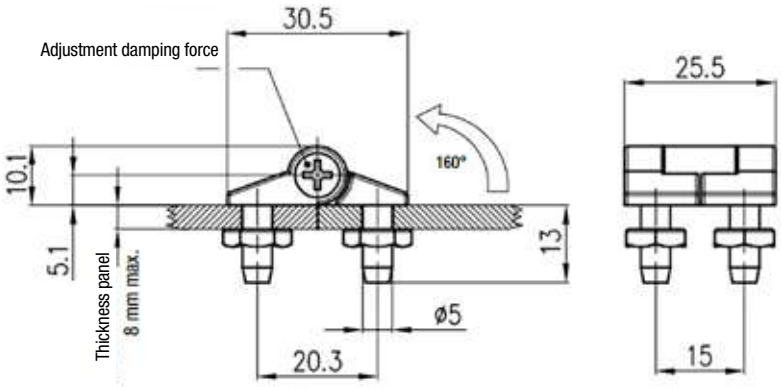

Code (NE)	Package (pcs)
CRSPF300250N8	300

MATERIAL - SURFACE TREATMENT
Pin: Steel white galvanized
Housing: PA6 (Polyamide) black

NOTES
Concealed hinge with release spring.

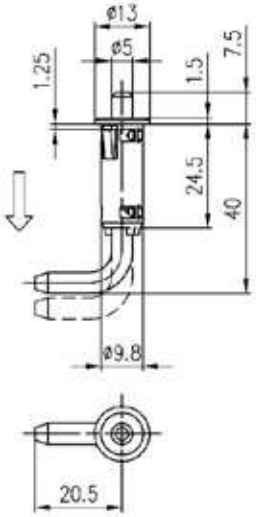

Drilling template

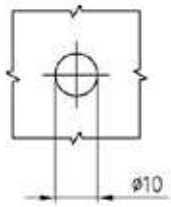

Code	Package (pcs)
CR50I13047001	200

CR00I-33 135° CONCEALED HINGE

MATERIAL - SURFACE TREATMENT
Flanges: Steel white galvanized
Pin: Steel white galvanized
Threaded pins: Steel white galvanized
Seeger: Burnished steel

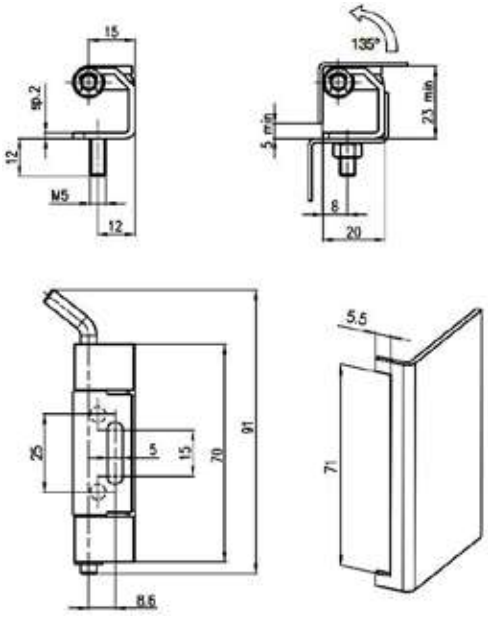

Code	Package (pcs)
CR5PI23091001	100

Steel
MATERIAL - SURFACE TREATMENT
Flanges pin, seeger: Steel white galvanized

Stainless steel
MATERIAL - SURFACE TREATMENT
Flanges pin, seeger: AISI304 (Stainless steel)

TYPE A

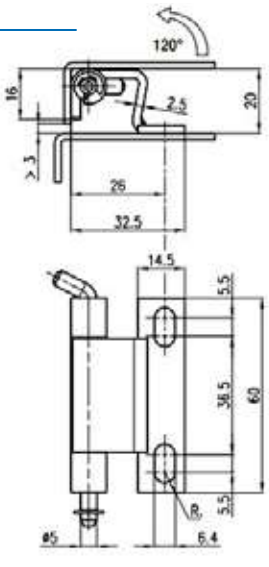

TYPE B

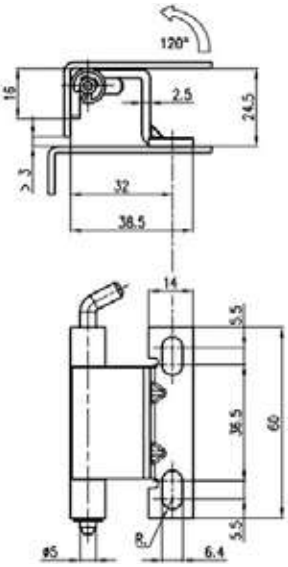

Code white galvanized	Code Inox	Type	Package (pcs) white galvanized	Package (pcs) Inox
CR50I20060001	**CR60I20060000**	A	100	50
CR50I24060001	**CR60I24060000**	B	100	50

MATERIAL - SURFACE TREATMENT
Flanges: Steel white galvanized
Pin: Steel white galvanized
Seeger: Steel white galvanized

Mounting pattern

TYPE A

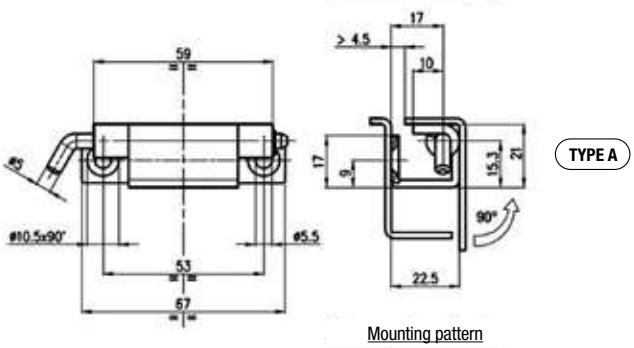

Mounting pattern

TYPE B

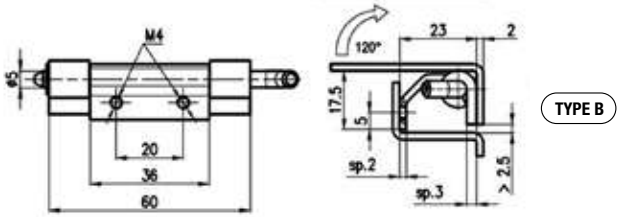

Code	Type	Package (pcs)
CR5SI21067001	A	100
CR5CI23060001	B	100

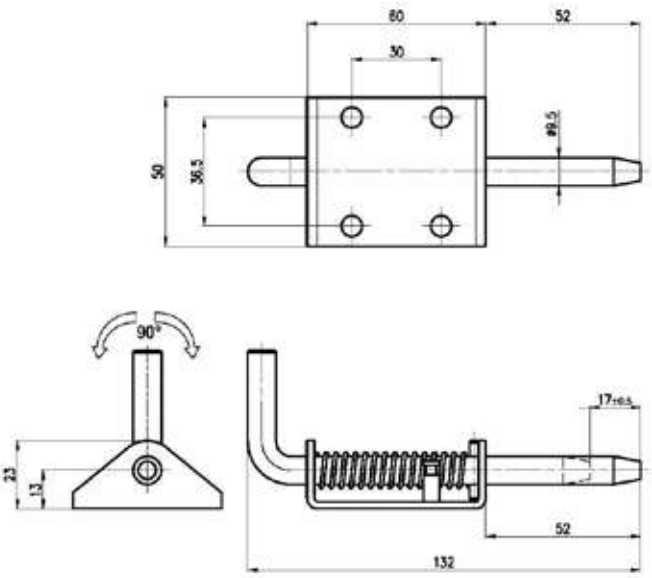

MATERIAL - SURFACE TREATMENT

Base:	Steel white galvanized
Pin:	Steel white galvanized
Spring:	Spring steel white galvanized
Stop pin:	Steel burnished
Housing pin:	Steel white galvanized

NOTES
Concealed hinge with release spring.

Code	Package (pcs)
CR5CI50132001	100

CR00I-37 SNAP-IN HINGE

MATERIAL - SURFACE TREATMENT

Flanges:	Steel white galvanized
Pin:	Steel white galvanized
Spring:	Spring steel white galvanized
Seeger:	Steel white galvanized

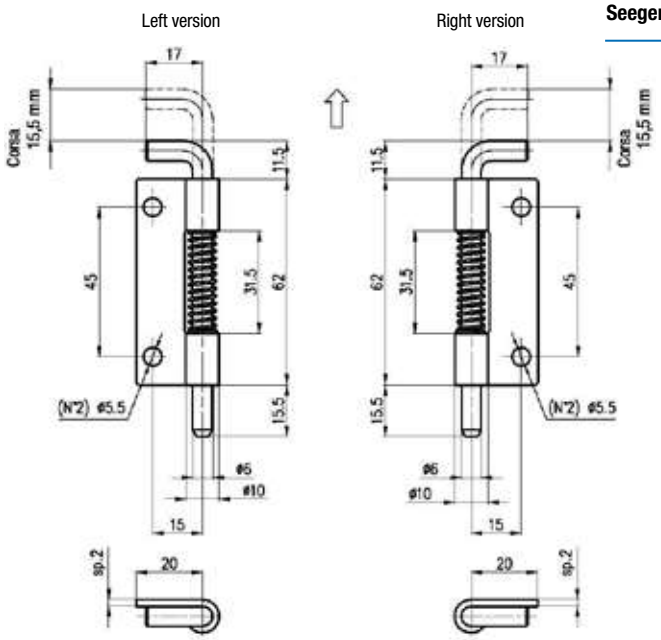

Code	Version	Package (pcs)
CR5CI20089001	DX	500
CR5CI20089A01	SX	500

MATERIAL - SURFACE TREATMENT
Flanges: Steel white galvanized
Pin: Steel white galvanized
Spring: Spring steel white galvanized
Seeger: Steel white galvanized

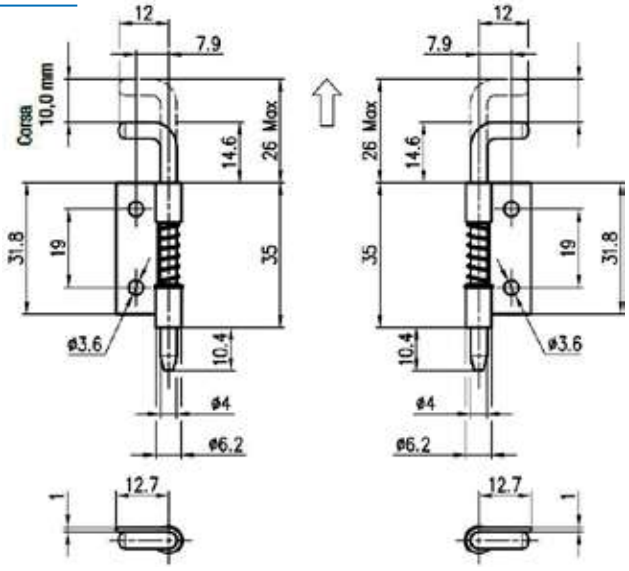

Left version | Right version

Code	Version	Package (pcs)
CR5CI12060001	DX	1.000
CR5CI12060A01	SX	1.000

FLAT SPRING HINGE
stainless steel | CR00M-39

MATERIAL
Flanges: AISI304 (Stainless steel)
Spring: AISI304 (Stainless steel)
Pin: AISI304 (Stainless steel)

NOTES
Prominent hinge whit spring.

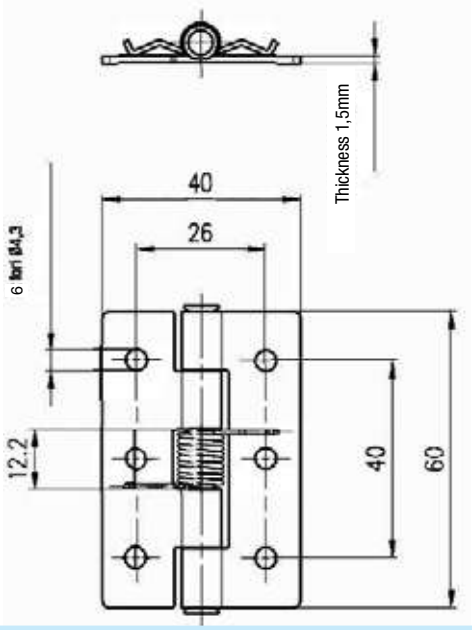

Code	Package (pcs)
CR6CM40060000	100

115° PROMINENT HINGE
plastic

MATERIAL

Flanges, cover:	POM (Acetyl)
Compression spring:	Stainless steel
Ball:	Steel
Bush:	Tempered steel

COLOUR

NE Black

NOTES

On demande avaible other opening angles: 80° and 115°.

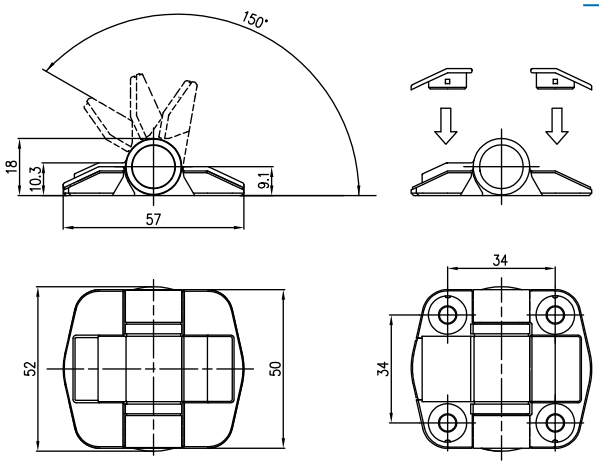

Code NE	Opening angle	Package (pcs)
CRQCP570500N8	150°	50

180° PROMINENT HINGE
aluminum

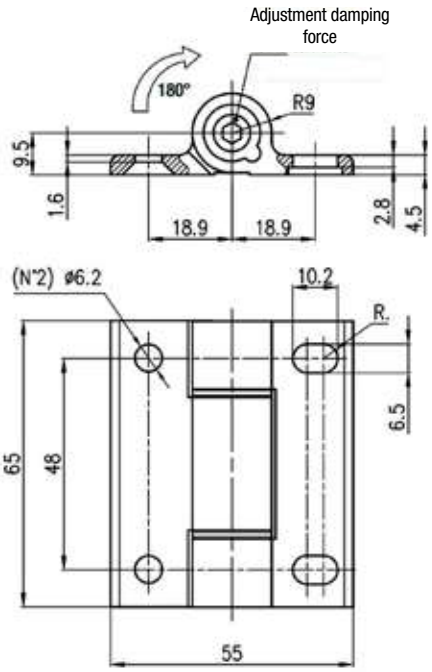

MATERIAL

Flanges:	AL (Aluminium) alloy
Pin:	PA (Polyamide) neutral
Bush:	Tempered steel
Washer:	PA (Polyamide) neutral
Screw, nut:	Inox

Code	Range torque adjustment	Package (pcs)
CR1CP55065000	0 ÷ 2	100

13

KNOBS

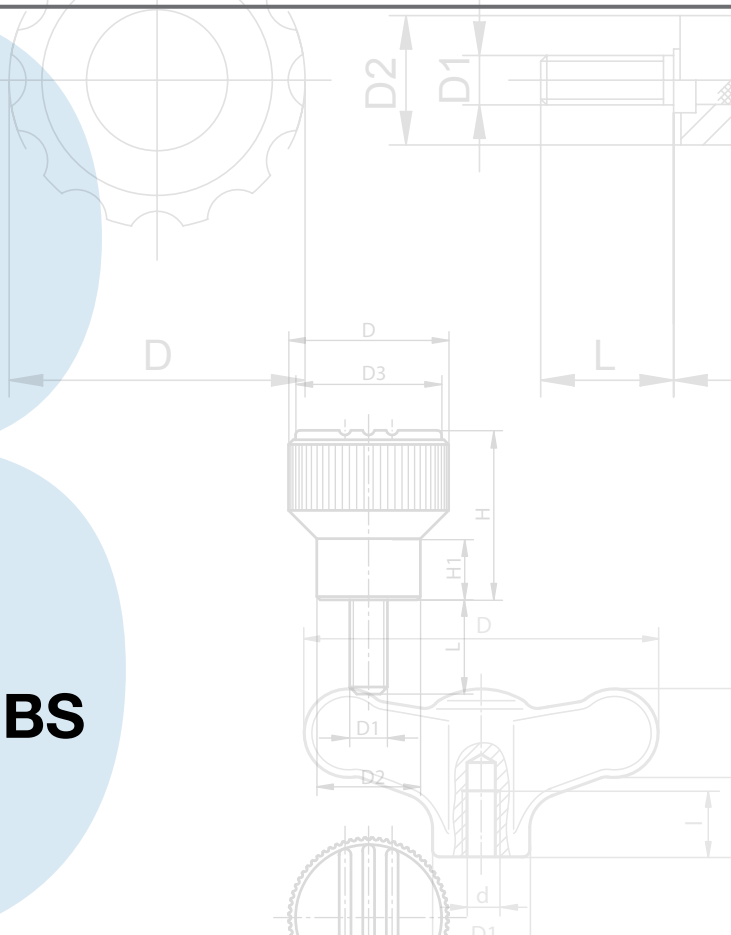

Lobe knobs
page 13.1

Three-arm knobs
page 13.16

Knurled knobs
page 13.20

Cross-shaped knobs
page 13.23

Wing nuts & screws
page 13.32

KNOB WITH SIX LOBES
with threaded stud

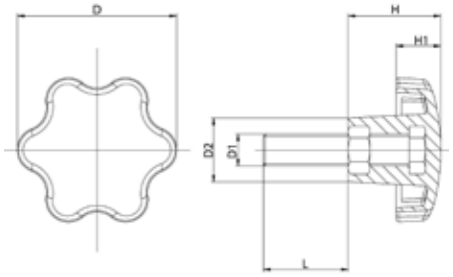

MATERIAL - SURFACE TREATMENT
Grip: PA6 (Polyamide)
Stud: Cl 4.8 (Steel) zinc plated

COLOUR
NE Black

NOTES
Available in other colours and materials.

Code (NE)	D	H	D1	L	D2	H1	Package (pcs)
SR0EMV5300510	30	19	M5	10	14	11	100
SR0EMV5300515	30	19	M5	15	14	11	100
SR0EMV5300520	30	19	M5	20	14	11	100
SR0EMV5300525	30	19	M5	25	14	11	100
SR0EMV5300530	30	19	M5	30	14	11	100
SR0EMV5300535	30	19	M5	35	14	11	100
SR0EMV5300540	30	19	M5	40	14	11	100
SR0EMV5300610	30	19	M6	10	14	11	100
SR0EMV5300615	30	19	M6	15	14	11	100
SR0EMV5300620	30	19	M6	20	14	11	100
SR0EMV5300625	30	19	M6	25	14	11	100
SR0EMV5300630	30	19	M6	30	14	11	100
SR0EMV5300635	30	19	M6	35	14	11	100
SR0EMV5300640	30	19	M6	40	14	11	100
SR0EMV5300650	30	19	M6	50	14	11	100
SR0EMV5300815	30	19	M8	15	14	11	100
SR0EMV5300820	30	19	M8	20	14	11	100
SR0EMV5300825	30	19	M8	25	14	11	100
SR0EMV5300830	30	19	M8	30	14	11	100
SR0EMV5300835	30	19	M8	35	14	11	100
SR0EMV5300840	30	19	M8	40	14	11	100
SR0EMV5300850	30	19	M8	50	14	11	100
SR0EMV5300880	30	19	M8	80	14	11	100
SR0EMV5400610	40	25	M6	10	18	13	100
SR0EMV5400615	40	25	M6	15	18	13	100
SR0EMV5400620	40	25	M6	20	18	13	100
SR0EMV5400625	40	25	M6	25	18	13	100
SR0EMV5400630	40	25	M6	30	18	13	100
SR0EMV5400635	40	25	M6	35	18	13	100
SR0EMV5400640	40	25	M6	40	18	13	100
SR0EMV5400815	40	25	M8	15	18	13	100
SR0EMV5400820	40	25	M8	20	18	13	100
SR0EMV5400825	40	25	M8	25	18	13	100
SR0EMV5400830	40	25	M8	30	18	13	100
SR0EMV5400835	40	25	M8	35	18	13	100
SR0EMV5400840	40	25	M8	40	18	13	100
SR0EMV5400845	40	25	M8	45	18	13	100
SR0EMV5400850	40	25	M8	50	18	13	100
SR0EMV5400860	40	25	M8	60	18	13	100
SR0EMV5401015	40	25	M10	15	18	13	100
SR0EMV5401020	40	25	M10	20	18	13	100
SR0EMV5401025	40	25	M10	25	18	13	100
SR0EMV5401030	40	25	M10	30	18	13	100
SR0EMV5401035	40	25	M10	35	18	13	100
SR0EMV5401040	40	25	M10	40	18	13	100
SR0EMV5401050	40	25	M10	50	18	13	100
SR0EMV5401060	40	25	M10	60	18	13	100
SR0EMV5500615	50	28	M6	15	21	15	50
SR0EMV5500620	50	28	M6	20	21	15	50

MATERIAL - SURFACE TREATMENT
Grip: PA6 (Polyamide)
Stud: Cl 4.8 (Steel) zinc plated

COLOUR
(NE) Black

NOTES
Available in other colours and materials.

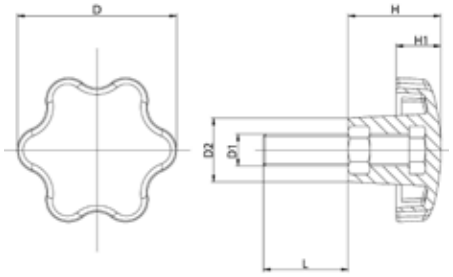

Code (NE)	D	H	D1	L	D2	H1	Package (pcs)
SR0EMV5500625	50	28	M6	25	21	15	50
SR0EMV5500630	50	28	M6	30	21	15	50
SR0EMV5500635	50	28	M6	35	21	15	50
SR0EMV5500640	50	28	M6	40	21	15	50
SR0EMV5500815	50	28	M8	15	21	15	50
SR0EMV5500820	50	28	M8	20	21	15	50
SR0EMV5500825	50	28	M8	25	21	15	50
SR0EMV5500830	50	28	M8	30	21	15	50
SR0EMV5500835	50	28	M8	35	21	15	50
SR0EMV5500840	50	28	M8	40	21	15	50
SR0EMV5500850	50	28	M8	50	21	15	50
SR0EMV5501015	50	28	M10	15	21	15	50
SR0EMV5501020	50	28	M10	20	21	15	50
SR0EMV5501025	50	28	M10	25	21	15	50
SR0EMV5501030	50	28	M10	30	21	15	50
SR0EMV5501035	50	28	M10	35	21	15	50
SR0EMV5501040	50	28	M10	40	21	15	50
SR0EMV5501220	50	28	M12	20	21	15	50
SR0EMV5501225	50	28	M12	25	21	15	50
SR0EMV5501230	50	28	M12	30	21	15	50
SR0EMV5501235	50	28	M12	35	21	15	50
SR0EMV5501240	50	28	M12	40	21	15	50
SR0EMV5501245	50	28	M12	45	21	15	50
SR0EMV5501250	50	28	M12	50	21	15	50
SR0EMV5600815	60	37	M8	15	24	18	50
SR0EMV5600820	60	37	M8	20	24	18	50
SR0EMV5600825	60	37	M8	25	24	18	50
SR0EMV5600830	60	37	M8	30	24	18	50
SR0EMV5600835	60	37	M8	35	24	18	50
SR0EMV5600840	60	37	M8	40	24	18	50
SR0EMV5600845	60	37	M8	45	24	18	50
SR0EMV5600850	60	37	M8	50	24	18	50
SR0EMV5601015	60	37	M10	15	24	18	50
SR0EMV5601020	60	37	M10	20	24	18	50
SR0EMV5601025	60	37	M10	25	24	18	50
SR0EMV5601030	60	37	M10	30	24	18	50
SR0EMV5601035	60	37	M10	35	24	18	50
SR0EMV5601040	60	37	M10	40	24	18	50
SR0EMV5601045	60	37	M10	45	24	18	50
SR0EMV5601050	60	37	M10	50	24	18	50
SR0EMV5601060	60	37	M10	60	24	18	50
SR0EMV5601220	60	37	M12	20	24	18	50
SR0EMV5601225	60	37	M12	25	24	18	50
SR0EMV5601230	60	37	M12	30	24	18	50
SR0EMV5601235	60	37	M12	35	24	18	50
SR0EMV5601240	60	37	M12	40	24	18	50
SR0EMV5601250	60	37	M12	50	24	18	50
SR0EMV5601260	60	37	M12	60	24	18	50
SR0EMV5701020	70	41	M10	20	24	21	50

KNOB WITH SIX LOBES
with threaded stud

MATERIAL - SURFACE TREATMENT
Grip: PA6 (Polyamide)
Stud: Cl 4.8 (Steel) zinc plated

COLOUR
NE Black

NOTES
Available in other colours and materials.

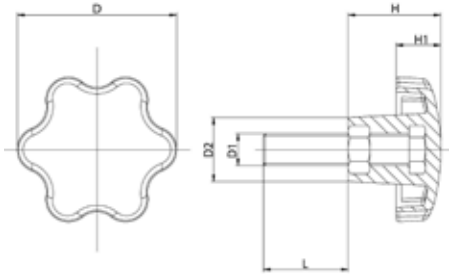

Code (NE)	D	H	D1	L	D2	H1	Package (pcs)
SR0EMV5701025	70	41	M10	25	24	21	50
SR0EMV5701030	70	41	M10	30	24	21	50
SR0EMV5701040	70	41	M10	40	24	21	50
SR0EMV5701050	70	41	M10	50	24	21	50
SR0EMV5701060	70	41	M10	60	24	21	50
SR0EMV5701220	70	41	M12	20	24	21	50
SR0EMV5701230	70	41	M12	30	24	21	50
SR0EMV5701240	70	41	M12	40	24	21	50
SR0EMV5701250	70	41	M12	50	24	21	50
SR0EMV5701260	70	41	M12	60	24	21	50
SR0EMV5701270	70	41	M12	70	24	21	50
SR0EMV5701280	70	41	M12	80	24	21	50
SR0EMV5701430	70	41	M14	30	24	21	50
SR0EMV5701440	70	41	M14	40	24	21	50
SR0EMV5701450	70	41	M14	50	24	21	50
SR0EMV5701460	70	41	M14	60	24	21	50
SR0EMV5701470	70	41	M14	70	24	21	50
SR0EMV5701480	70	41	M14	80	24	21	50
SR0EMV5901240	90	56	M12	40	34	25	25
SR0EMV5901250	90	56	M12	50	34	25	25
SR0EMV5901260	90	56	M12	60	34	25	25
SR0EMV5901270	90	56	M12	70	34	25	25
SR0EMV5901280	90	56	M12	80	34	25	25
SR0EMV5901440	90	56	M14	40	34	25	25
SR0EMV5901450	90	56	M14	50	34	25	25
SR0EMV5901460	90	56	M14	60	34	25	25
SR0EMV5901470	90	56	M14	70	34	25	25
SR0EMV5901480	90	56	M14	80	34	25	25

MATERIAL
Grip: PA6 (Polyamide)
Bushing: OT58 (Brass)

COLOUR
NE Black

NOTES
Available in other colours and materials.

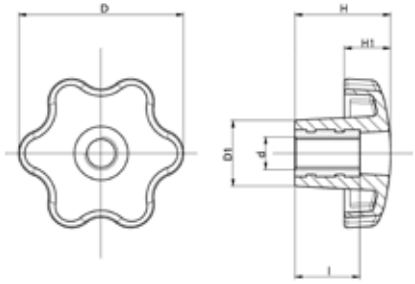

Code NE	D	H	d	l	D1	H1	Package (pcs)
SR0EMV5300599	30	19	M5	10	14	11	100
SR0EMV5300699	30	19	M6	10	14	11	100
SR0EMV5300899	30	19	M8	10	14	11	100
SR0EMV5400699	40	25	M6	15	18	13	100
SR0EMV5400899	40	25	M8	15	18	13	100
SR0EMV5401099	40	25	M10	15	18	13	100
SR0EMV5500699	50	28	M6	15	21	15	50
SR0EMV5500899	50	28	M8	15	21	15	50
SR0EMV5501099	50	28	M10	15	21	15	50
SR0EMV5501299	50	28	M12	15	21	15	50
SR0EMV5600899	60	37	M8	20	24	18	50
SR0EMV5601099	60	37	M10	20	24	18	50
SR0EMV5601299	60	37	M12	20	24	18	50
SR0EMV5701099	70	41	M10	20	24	21	50
SR0EMV5701299	70	41	M12	20	24	21	50
SR0EMV5701499	70	41	M14	20	24	21	50
SR0EMV5701699	70	41	M16	20	24	21	50
SR0EMV5901299	90	56	M12	20	34	25	25
SR0EMV5901499	90	56	M14	20	34	25	25
SR0EMV5901699	90	56	M16	20	34	25	25
SR0EMV5901899	90	56	M18	20	34	25	25

KNOB WITH SIX LOBES
BFC

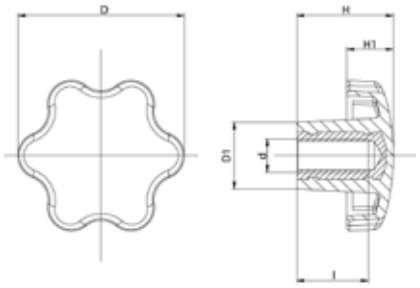

MATERIAL
Grip: PA6 (Polyamide)
Bushing: OT58 (Brass)

COLOUR
NE Black

NOTES
Available in other colours and materials.

Code NE	D	H	d	l	D1	H1	Package (pcs)
SR0EMV5300500	30	19	M5	9	14	11	100
SR0EMV5300600	30	19	M6	9	14	11	100
SR0EMV5300800	30	19	M8	12	14	11	100
SR0EMV5400600	40	25	M6	14	18	13	100
SR0EMV5400800	40	25	M8	17	18	13	100
SR0EMV5401000	40	25	M10	17	18	13	100
SR0EMV5500600	50	28	M6	9	21	15	50
SR0EMV5500800	50	28	M8	12	21	15	50
SR0EMV5501000	50	28	M10	17	21	15	50
SR0EMV5501200	50	28	M12	17	21	15	50
SR0EMV5600800	60	37	M8	17	24	18	50
SR0EMV5601000	60	37	M10	17	24	18	50
SR0EMV5601200	60	37	M12	17	24	18	50
SR0EMV5701000	70	41	M10	24	24	21	50
SR0EMV5701200	70	41	M12	24	24	21	50
SR0EMV5701400	70	41	M14	24	24	21	50
SR0EMV5701600	70	41	M16	24	24	21	50
SR0EMV5901200	90	56	M12	24	34	25	25
SR0EMV5901400	90	56	M14	24	34	25	25
SR0EMV5901600	90	56	M16	24	34	25	25
SR0EMV5901800	90	56	M18	35	34	25	25

MATERIAL
Grip: PA6 (Polyamide)
Bushing: OT58 (Brass)

COLOUR
NE Black

NOTES
Available in other colours and materials.

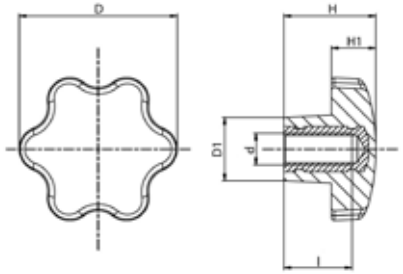

Code NE	D	H	d	l	D1	H1	Package (pcs)
SR0EMV53A0500	30	19	M5	9	14	11	100
SR0EMV53A0600	30	19	M6	9	14	11	100
SR0EMV53A0800	30	19	M8	12	14	11	100
SR0EMV54A0600	40	25	M6	14	18	13	100
SR0EMV54A0800	40	25	M8	17	18	13	100
SR0EMV54A1000	40	25	M10	17	18	13	100
SR0EMV55A0600	50	28	M6	9	21	15	50
SR0EMV55A0800	50	28	M8	12	21	15	50
SR0EMV55A1000	50	28	M10	17	21	15	50
SR0EMV55A1200	50	28	M12	17	21	15	50
SR0EMV56A0800	60	37	M8	17	24	18	50
SR0EMV56A1000	60	37	M10	17	24	18	50
SR0EMV56A1200	60	37	M12	17	24	18	50
SR0EMV57A1000	70	41	M10	24	24	21	50
SR0EMV57A1200	70	41	M12	24	24	21	50
SR0EMV57A1400	70	41	M14	24	24	21	50
SR0EMV57A1600	70	41	M16	24	24	21	50
SR0EMV59A1200	90	56	M12	24	34	25	25
SR0EMV59A1400	90	56	M14	24	34	25	25
SR0EMV59A1600	90	56	M16	24	34	25	25
SR0EMV59A1800	90	56	M18	35	34	25	25

KNOB WITH SIX LOBES
full body with threaded stud

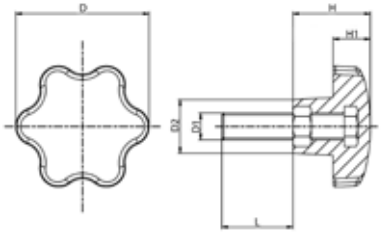

MATERIAL - SURFACE TREATMENT
Grip: PA6 (Polyamide)
Stud: Cl 4.8 (Steel) zinc plated

COLOUR
NE Black

NOTES
Available in other colours and materials.

Code (NE)	D	H	D1	L	D2	H1	Package (pcs)
SR0EMV53A0520	30	19	M5	20	14	11	100
SR0EMV53A0530	30	19	M5	30	14	11	100
SR0EMV53A0540	30	19	M5	40	14	11	100
SR0EMV53A0620	30	19	M6	20	14	11	100
SR0EMV53A0630	30	19	M6	30	14	11	100
SR0EMV53A0640	30	19	M6	40	14	11	100
SR0EMV53A0820	30	19	M8	20	14	11	100
SR0EMV53A0830	30	19	M8	30	14	11	100
SR0EMV53A0840	30	19	M8	40	14	11	100
SR0EMV53A0850	30	19	M8	50	14	11	100
SR0EMV54A0610	40	25	M6	10	18	13	100
SR0EMV54A0620	40	25	M6	20	18	13	100
SR0EMV54A0630	40	25	M6	30	18	13	100
SR0EMV54A0640	40	25	M6	40	18	13	100
SR0EMV54A0820	40	25	M8	20	18	13	100
SR0EMV54A0830	40	25	M8	30	18	13	100
SR0EMV54A0840	40	25	M8	40	18	13	100
SR0EMV54A0850	40	25	M8	50	18	13	100
SR0EMV54A1020	40	25	M10	20	18	13	100
SR0EMV54A1030	40	25	M10	30	18	13	100
SR0EMV54A1040	40	25	M10	40	18	13	100
SR0EMV54A1050	40	25	M10	50	18	13	100
SR0EMV54A1060	40	25	M10	60	18	13	100
SR0EMV55A0620	50	28	M6	20	21	15	50
SR0EMV55A0630	50	28	M6	30	21	15	50
SR0EMV55A0640	50	28	M6	40	21	15	50
SR0EMV55A0820	50	28	M8	20	21	15	50
SR0EMV55A0830	50	28	M8	30	21	15	50
SR0EMV55A0840	50	28	M8	40	21	15	50
SR0EMV55A0850	50	28	M8	50	21	15	50
SR0EMV55A1020	50	28	M10	20	21	15	50
SR0EMV55A1030	50	28	M10	30	21	15	50
SR0EMV55A1040	50	28	M10	40	21	15	50
SR0EMV55A1220	50	28	M12	20	21	15	50
SR0EMV55A1230	50	28	M12	30	21	15	50
SR0EMV55A1240	50	28	M12	40	21	15	50
SR0EMV55A1250	50	28	M12	50	21	15	50
SR0EMV56A0820	60	37	M8	20	24	18	50
SR0EMV56A0830	60	37	M8	30	24	18	50
SR0EMV56A0840	60	37	M8	40	24	18	50
SR0EMV56A0850	60	37	M8	50	24	18	50
SR0EMV56A1020	60	37	M10	20	24	18	50
SR0EMV56A1030	60	37	M10	30	24	18	50
SR0EMV56A1040	60	37	M10	40	24	18	50
SR0EMV56A1050	60	37	M10	50	24	18	50

MATERIAL - SURFACE TREATMENT
Grip: PA6 (Polyamide)
Stud: Cl 4.8 (Steel) zinc plated

COLOUR
(NE) Black

NOTES
Available in other colours and materials.

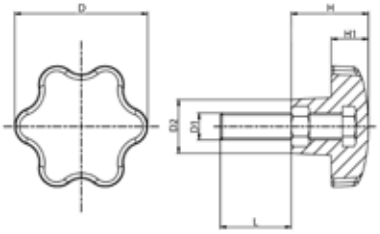

Code (NE)	D	H	D1	L	D2	H1	Package (pcs)
SR0EMV56A1060	60	37	M10	60	24	18	50
SR0EMV56A1220	60	37	M12	20	24	18	50
SR0EMV56A1230	60	37	M12	30	24	18	50
SR0EMV56A1240	60	37	M12	40	24	18	50
SR0EMV56A1250	60	37	M12	50	24	18	50
SR0EMV56A1260	60	37	M12	60	24	18	50
SR0EMV57A1020	70	41	M10	20	24	21	50
SR0EMV57A1030	70	41	M10	30	24	21	50
SR0EMV57A1040	70	41	M10	40	24	21	50
SR0EMV57A1050	70	41	M10	50	24	21	50
SR0EMV57A1060	70	41	M10	60	24	21	50
SR0EMV57A1220	70	41	M12	20	24	21	50
SR0EMV57A1230	70	41	M12	30	24	21	50
SR0EMV57A1240	70	41	M12	40	24	21	50
SR0EMV57A1250	70	41	M12	50	24	21	50
SR0EMV57A1260	70	41	M12	60	24	21	50
SR0EMV57A1270	70	41	M12	70	24	21	50
SR0EMV57A1280	70	41	M12	80	24	21	50
SR0EMV57A1430	70	41	M14	30	24	21	50
SR0EMV57A1440	70	41	M14	40	24	21	50
SR0EMV57A1450	70	41	M14	50	24	21	50
SR0EMV57A1460	70	41	M14	60	24	21	50
SR0EMV57A1470	70	41	M14	70	24	21	50
SR0EMV57A1480	70	41	M14	80	24	21	50
SR0EMV59A1240	90	56	M12	40	34	25	25
SR0EMV59A1250	90	56	M12	50	34	25	25
SR0EMV59A1260	90	56	M12	60	34	25	25
SR0EMV59A1270	90	56	M12	70	34	25	25
SR0EMV59A1280	90	56	M12	80	34	25	25
SR0EMV59A1440	90	56	M14	40	34	25	25
SR0EMV59A1450	90	56	M14	50	34	25	25
SR0EMV59A1460	90	56	M14	60	34	25	25
SR0EMV59A1470	90	56	M14	70	34	25	25
SR0EMV59A1480	90	56	M14	80	34	25	25

LOBE KNOBS
with threaded stud

MATERIAL - SURFACE TREATMENT
Grip: PA6 (Polyamide)
Stud: Cl 4.8 (Steel) zinc plated

COLOUR
NE Black

NOTES
Available in other colours and materials.

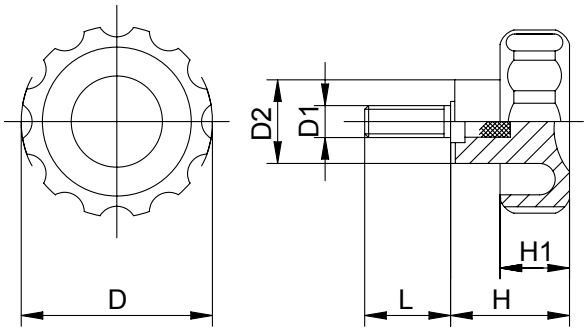

Code NE	D	H	D1	L	D2	H1	Package (pcs)
SR0EMV1200410	20	16	M4	10	12	9	100
SR0EMV1200415	20	16	M4	15	12	9	100
SR0EMV1200420	20	16	M4	20	12	9	100
SR0EMV1200430	20	16	M4	30	12	9	100
SR0EMV1200510	20	16	M5	10	12	9	100
SR0EMV1200515	20	16	M5	15	12	9	100
SR0EMV1200520	20	16	M5	20	12	9	100
SR0EMV1200525	20	16	M5	25	12	9	100
SR0EMV1200530	20	16	M5	30	12	9	100
SR0EMV1200535	20	16	M5	35	12	9	100
SR0EMV1200540	20	16	M5	40	12	9	100
SR0EMV1300510	30	22	M5	10	16	13	100
SR0EMV1300515	30	22	M5	15	16	13	100
SR0EMV1300520	30	22	M5	20	16	13	100
SR0EMV1300525	30	22	M5	25	16	13	100
SR0EMV1300530	30	22	M5	30	16	13	100
SR0EMV1300540	30	22	M5	40	16	13	100
SR0EMV1200610	20	16	M6	10	12	9	100
SR0EMV1200615	20	16	M6	15	12	9	100
SR0EMV1200620	20	16	M6	20	12	9	100
SR0EMV1200625	20	16	M6	25	12	9	100
SR0EMV1200630	20	16	M6	30	12	9	100
SR0EMV1200635	20	16	M6	35	12	9	100
SR0EMV1200640	20	16	M6	40	12	9	100
SR0EMV1200645	20	16	M6	45	12	9	100
SR0EMV1200650	20	16	M6	50	12	9	100
SR0EMV1200655	20	16	M6	55	12	9	100
SR0EMV1200660	20	16	M6	60	12	9	100
SR0EMV1300610	30	22	M6	10	16	13	100
SR0EMV1300615	30	22	M6	15	16	13	100
SR0EMV1300620	30	22	M6	20	16	13	100
SR0EMV1300625	30	22	M6	25	16	13	100
SR0EMV1300630	30	22	M6	30	16	13	100
SR0EMV1300635	30	22	M6	35	16	13	100
SR0EMV1300640	30	22	M6	40	16	13	100
SR0EMV1300645	30	22	M6	45	16	13	100
SR0EMV1300650	30	22	M6	50	16	13	100
SR0EMV1300660	30	22	M6	60	16	13	100

MATERIAL - SURFACE TREATMENT
Grip: PA6 (Polyamide)
Stud: Cl 4.8 (Steel) zinc plated

COLOUR
(NE) Black

NOTES
Available in other colours and materials.

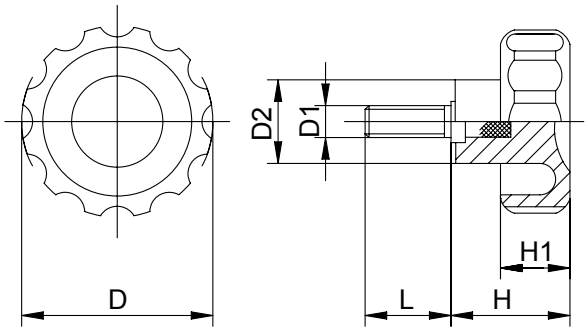

Code (NE)	D	H	D1	L	D2	H1	Package (pcs)
SR0EMV1300665	30	22	M6	65	16	13	100
SR0EMV1300670	30	22	M6	70	16	13	100
SR0EMV1400610	40	27	M6	10	20	16	100
SR0EMV1400615	40	27	M6	15	20	16	100
SR0EMV1400620	40	27	M6	20	20	16	100
SR0EMV1400625	40	27	M6	25	20	16	100
SR0EMV1400630	40	27	M6	30	20	16	100
SR0EMV1400635	40	27	M6	35	20	16	100
SR0EMV1400640	40	27	M6	40	20	16	100
SR0EMV1400645	40	27	M6	45	20	16	100
SR0EMV1400650	40	27	M6	50	20	16	100
SR0EMV1400660	40	27	M6	60	20	16	100
SR0EMV1300810	30	22	M8	10	16	13	100
SR0EMV1300815	30	22	M8	15	16	13	100
SR0EMV1300820	30	22	M8	20	16	13	100
SR0EMV1300825	30	22	M8	25	16	13	100
SR0EMV1300830	30	22	M8	30	16	13	100
SR0EMV1300835	30	22	M8	35	16	13	100
SR0EMV1300840	30	22	M8	40	16	13	100
SR0EMV1300845	30	22	M8	45	16	13	100
SR0EMV1300850	30	22	M8	50	16	13	100
SR0EMV1300855	30	22	M8	55	16	13	100
SR0EMV1300860	30	22	M8	60	16	13	100
SR0EMV1400810	40	27	M8	10	20	16	100
SR0EMV1400815	40	27	M8	15	20	16	100
SR0EMV1400820	40	27	M8	20	20	16	100
SR0EMV1400825	40	27	M8	25	20	16	100
SR0EMV1400830	40	27	M8	30	20	16	100
SR0EMV1400835	40	27	M8	35	20	16	100
SR0EMV1400840	40	27	M8	40	20	16	100
SR0EMV1400845	40	27	M8	45	20	16	100
SR0EMV1400850	40	27	M8	50	20	16	100
SR0EMV1400855	40	27	M8	55	20	16	100
SR0EMV1400860	40	27	M8	60	20	16	100
SR0EMV1400865	40	27	M8	65	20	16	100
SR0EMV1400870	40	27	M8	70	20	16	100
SR0EMV1500810	50	32	M8	10	23	20	50
SR0EMV1500815	50	32	M8	15	23	20	50

MATERIAL - SURFACE TREATMENT
Grip: PA6 (Polyamide)
Stud: Cl 4.8 (Steel) zinc plated

COLOUR
NE Black

NOTES
Available in other colours and materials.

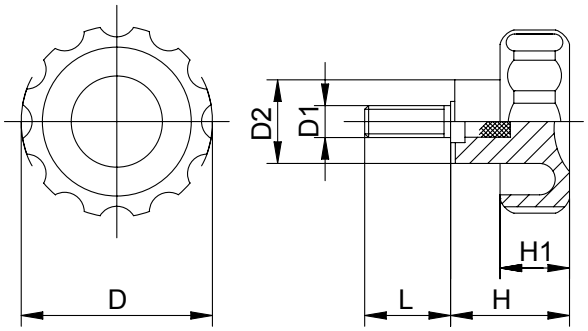

Code NE	D	H	D1	L	D2	H1	Package (pcs)
SR0EMV1200410	20	16	M4	10	12	9	100
SR0EMV1200415	20	16	M4	15	12	9	100
SR0EMV1200420	20	16	M4	20	12	9	100
SR0EMV1200430	20	16	M4	30	12	9	100
SR0EMV1200510	20	16	M5	10	12	9	100
SR0EMV1200515	20	16	M5	15	12	9	100
SR0EMV1200520	20	16	M5	20	12	9	100
SR0EMV1200525	20	16	M5	25	12	9	100
SR0EMV1200530	20	16	M5	30	12	9	100
SR0EMV1200535	20	16	M5	35	12	9	100
SR0EMV1200540	20	16	M5	40	12	9	100
SR0EMV1300510	30	22	M5	10	16	13	100
SR0EMV1300515	30	22	M5	15	16	13	100
SR0EMV1300520	30	22	M5	20	16	13	100
SR0EMV1300525	30	22	M5	25	16	13	100
SR0EMV1300530	30	22	M5	30	16	13	100
SR0EMV1300540	30	22	M5	40	16	13	100
SR0EMV1200610	20	16	M6	10	12	9	100
SR0EMV1200615	20	16	M6	15	12	9	100
SR0EMV1200620	20	16	M6	20	12	9	100
SR0EMV1200625	20	16	M6	25	12	9	100
SR0EMV1200630	20	16	M6	30	12	9	100
SR0EMV1200635	20	16	M6	35	12	9	100
SR0EMV1200640	20	16	M6	40	12	9	100
SR0EMV1200645	20	16	M6	45	12	9	100
SR0EMV1200650	20	16	M6	50	12	9	100
SR0EMV1200655	20	16	M6	55	12	9	100
SR0EMV1200660	20	16	M6	60	12	9	100
SR0EMV1300610	30	22	M6	10	16	13	100
SR0EMV1300615	30	22	M6	15	16	13	100
SR0EMV1300620	30	22	M6	20	16	13	100
SR0EMV1300625	30	22	M6	25	16	13	100
SR0EMV1300630	30	22	M6	30	16	13	100
SR0EMV1300635	30	22	M6	35	16	13	100
SR0EMV1300640	30	22	M6	40	16	13	100
SR0EMV1300645	30	22	M6	45	16	13	100
SR0EMV1300650	30	22	M6	50	16	13	100
SR0EMV1300660	30	22	M6	60	16	13	100

MATERIAL - SURFACE TREATMENT
Grip: PA6 (Polyamide)
Stud: Cl 4.8 (Steel) zinc plated

COLOUR
(NE) Black

NOTES
Available in other colours and materials.

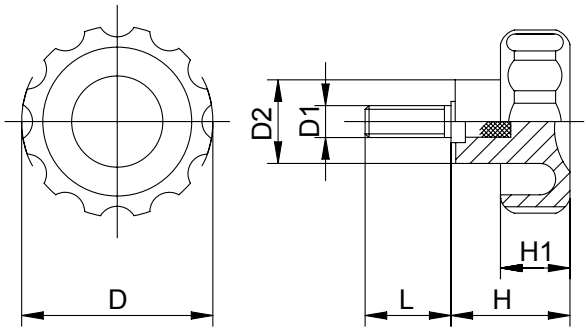

Code (NE)	D	H	D1	L	D2	H1	Package (pcs)
SR0EMV1300665	30	22	M6	65	16	13	100
SR0EMV1300670	30	22	M6	70	16	13	100
SR0EMV1400610	40	27	M6	10	20	16	100
SR0EMV1400615	40	27	M6	15	20	16	100
SR0EMV1400620	40	27	M6	20	20	16	100
SR0EMV1400625	40	27	M6	25	20	16	100
SR0EMV1400630	40	27	M6	30	20	16	100
SR0EMV1400635	40	27	M6	35	20	16	100
SR0EMV1400640	40	27	M6	40	20	16	100
SR0EMV1400645	40	27	M6	45	20	16	100
SR0EMV1400650	40	27	M6	50	20	16	100
SR0EMV1400660	40	27	M6	60	20	16	100
SR0EMV1300810	30	22	M8	10	16	13	100
SR0EMV1300815	30	22	M8	15	16	13	100
SR0EMV1300820	30	22	M8	20	16	13	100
SR0EMV1300825	30	22	M8	25	16	13	100
SR0EMV1300830	30	22	M8	30	16	13	100
SR0EMV1300835	30	22	M8	35	16	13	100
SR0EMV1300840	30	22	M8	40	16	13	100
SR0EMV1300845	30	22	M8	45	16	13	100
SR0EMV1300850	30	22	M8	50	16	13	100
SR0EMV1300855	30	22	M8	55	16	13	100
SR0EMV1300860	30	22	M8	60	16	13	100
SR0EMV1400810	40	27	M8	10	20	16	100
SR0EMV1400815	40	27	M8	15	20	16	100
SR0EMV1400820	40	27	M8	20	20	16	100
SR0EMV1400825	40	27	M8	25	20	16	100
SR0EMV1400830	40	27	M8	30	20	16	100
SR0EMV1400835	40	27	M8	35	20	16	100
SR0EMV1400840	40	27	M8	40	20	16	100
SR0EMV1400845	40	27	M8	45	20	16	100
SR0EMV1400850	40	27	M8	50	20	16	100
SR0EMV1400855	40	27	M8	55	20	16	100
SR0EMV1400860	40	27	M8	60	20	16	100
SR0EMV1400865	40	27	M8	65	20	16	100
SR0EMV1400870	40	27	M8	70	20	16	100
SR0EMV1500810	50	32	M8	10	23	20	50
SR0EMV1500815	50	32	M8	15	23	20	50

MATERIAL - SURFACE TREATMENT
Grip: PA6 (Polyamide)
Stud: Cl 4.8 (Steel) zinc plated

COLOUR
NE Black

NOTES
Available in other colours and materials.

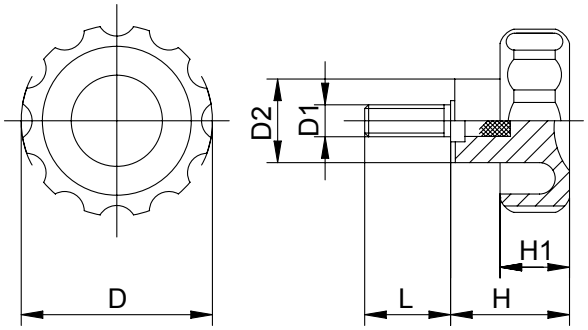

Code NE	D	H	D1	L	D2	H1	Package (pcs)
SR0EMV1500820	50	32	M8	20	23	20	50
SR0EMV1500825	50	32	M8	25	23	20	50
SR0EMV1500830	50	32	M8	30	23	20	50
SR0EMV1500835	50	32	M8	35	23	20	50
SR0EMV1500840	50	32	M8	40	23	20	50
SR0EMV1500845	50	32	M8	45	23	20	50
SR0EMV1500850	50	32	M8	50	23	20	50
SR0EMV1500855	50	32	M8	55	23	20	50
SR0EMV1500860	50	32	M8	60	23	20	50
SR0EMV1500865	50	32	M8	65	23	20	50
SR0EMV1500870	50	32	M8	70	23	20	50
SR0EMV1500875	50	32	M8	75	23	20	50
SR0EMV1500880	50	32	M8	80	23	20	50
SR0EMV1600810	60	36	M8	10	26	22	50
SR0EMV1600815	60	36	M8	15	26	22	50
SR0EMV1600820	60	36	M8	20	26	22	50
SR0EMV1600825	60	36	M8	25	26	22	50
SR0EMV1600830	60	36	M8	30	26	22	50
SR0EMV1600835	60	36	M8	35	26	22	50
SR0EMV1600840	60	36	M8	40	26	22	50
SR0EMV1600845	60	36	M8	45	26	22	50
SR0EMV1600850	60	36	M8	50	26	22	50
SR0EMV1600860	60	36	M8	60	26	22	50
SR0EMV1401015	40	27	M10	15	20	16	100
SR0EMV1401020	40	27	M10	20	20	16	100
SR0EMV1401025	40	27	M10	25	20	16	100
SR0EMV1401030	40	27	M10	30	20	16	100
SR0EMV1401035	40	27	M10	35	20	16	100
SR0EMV1401040	40	27	M10	40	20	16	100
SR0EMV1401050	40	27	M10	50	20	16	100
SR0EMV1401060	40	27	M10	60	20	16	100
SR0EMV1501015	50	32	M10	15	23	20	50

MATERIAL
Grip: PA6 (Polyamide)
Bushing: OT58 (Brass)

COLOUR
NE Black

NOTES
Available in other colours and materials.

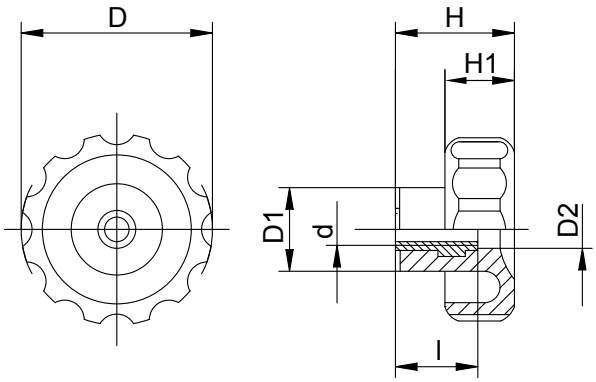

Code NE	D	H	d	l	D1	H1	D2	Package (pcs)
SR0EMV1200599	20	16	M5	10	12	9	8	100
SR0EMV1200699	20	16	M6	10	12	9	8	100
SR0EMV1300599	30	22	M5	10	16	13	10	100
SR0EMV1300699	30	22	M6	10	16	13	10	100
SR0EMV1300899	30	22	M8	10	16	13	10	100
SR0EMV1400699	40	27	M6	15	20	16	12	100
SR0EMV1400899	40	27	M8	15	20	16	12	100
SR0EMV1401099	40	27	M10	15	20	16	12	100
SR0EMV1500899	50	32	M8	20	23	20	14	50
SR0EMV1501099	50	32	M10	20	23	20	14	50
SR0EMV1501299	50	32	M12	20	23	20	14	50
SR0EMV1600899	60	36	M8	20	26	22	14	50
SR0EMV1601099	60	36	M10	20	26	22	14	50
SR0EMV1601299	60	36	M12	20	26	22	14	50
SR0EMV1701099	70	40	M10	20	27	24	16	50
SR0EMV1701299	70	40	M12	20	27	24	16	50
SR0EMV1701499	70	40	M14	20	27	24	16	50
SR0EMV1701699	70	40	M16	20	27	24	16	50
SR0EMV1801299	80	42	M12	20	30	25	18	50
SR0EMV1801499	80	42	M14	20	30	25	18	50
SR0EMV1801699	80	42	M16	20	30	25	18	50

LOBE KNOBS
with blind threaded bushing

MATERIAL
Grip: PA6 (Polyamide)
Bushing: OT58 (Brass)

COLOUR
NE Black

NOTES
Available in other colours and materials.

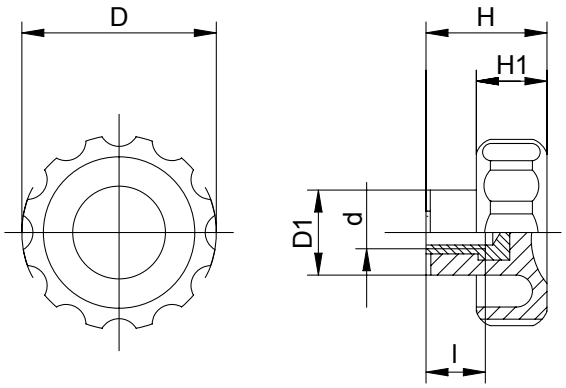

Code NE	D	H	d	l	D1	H1	Package (pcs)
SR0EMV1200400	20	16	M4	9	12	9	100
SR0EMV1200500	20	16	M5	9	12	9	100
SR0EMV1200600	20	16	M6	9	12	9	100
SR0EMV1300500	30	22	M5	9	16	13	100
SR0EMV1300600	30	22	M6	9	16	13	100
SR0EMV1300800	30	22	M8	12	16	13	100
SR0EMV1400600	40	27	M6	14	20	16	100
SR0EMV1400800	40	27	M8	17	20	16	100
SR0EMV1401000	40	27	M10	17	20	16	100
SR0EMV1500600	50	32	M6	17	23	20	50
SR0EMV1500800	50	32	M8	17	23	20	50
SR0EMV1501000	50	32	M10	17	23	20	50
SR0EMV1501200	50	32	M12	17	23	20	50
SR0EMV1600800	60	36	M8	17	26	22	50
SR0EMV1601000	60	36	M10	17	26	22	50
SR0EMV1601200	60	36	M12	17	26	22	50
SR0EMV1701000	70	40	M10	25	27	24	50
SR0EMV1701200	70	40	M12	25	27	24	50
SR0EMV1701400	70	40	M14	25	27	24	50
SR0EMV1701600	70	40	M16	25	27	24	50
SR0EMV1801000	80	42	M10	25	30	25	50
SR0EMV1801200	80	42	M12	25	30	25	50
SR0EMV1801400	80	42	M14	25	30	25	50
SR0EMV1801600	80	42	M16	25	30	25	50

MATERIAL - SURFACE TREATMENT
Grip: PA6 (Polyamide)
Stud: Cl 4.8 (Steel) zinc plated

COLOUR
NE Black

NOTES
Available in other colours and materials.

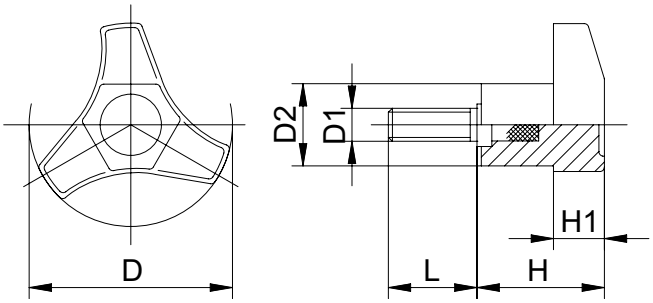

Code NE	D	H	D1	L	D2	H1	Package (pcs)
SR0EMV6450610	45	27	M6	10	17	11	100
SR0EMV6450615	45	27	M6	15	17	11	100
SR0EMV6450620	45	27	M6	20	17	11	100
SR0EMV6450625	45	27	M6	25	17	11	100
SR0EMV6450630	45	27	M6	30	17	11	100
SR0EMV6450635	45	27	M6	35	17	11	100
SR0EMV6450640	45	27	M6	40	17	11	100
SR0EMV6450810	45	27	M8	10	17	11	100
SR0EMV6450815	45	27	M8	15	17	11	100
SR0EMV6450820	45	27	M8	20	17	11	100
SR0EMV6450825	45	27	M8	25	17	11	100
SR0EMV6450830	45	27	M8	30	17	11	100
SR0EMV6450835	45	27	M8	35	17	11	100
SR0EMV6450840	45	27	M8	40	17	11	100
SR0EMV6450850	45	27	M8	50	17	11	100
SR0EMV6450860	45	27	M8	60	17	11	100
SR0EMV6451015	45	27	M10	15	17	11	100
SR0EMV6451020	45	27	M10	20	17	11	100
SR0EMV6451025	45	27	M10	25	17	11	100
SR0EMV6451030	45	27	M10	30	17	11	100
SR0EMV6451035	45	27	M10	35	17	11	100
SR0EMV6451040	45	27	M10	40	17	11	100
SR0EMV6451050	45	27	M10	50	17	11	100
SR0EMV6451060	45	27	M10	60	17	11	100
SR0EMV6550610	55	32	M6	10	20	14	100
SR0EMV6550615	55	32	M6	15	20	14	100
SR0EMV6550620	55	32	M6	20	20	14	100
SR0EMV6550625	55	32	M6	25	20	14	100
SR0EMV6550630	55	32	M6	30	20	14	100
SR0EMV6550635	55	32	M6	35	20	14	100

KNOB WITH THREE LOBES
with threaded stud

MATERIAL - SURFACE TREATMENT
Grip: PA6 (Polyamide)
Stud: Cl 4.8 (Steel) zinc plated

COLOUR
NE Black

NOTES
Available in other colours and materials.

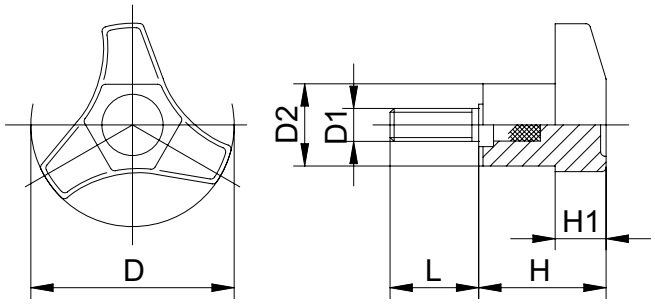

Code NE	D	H	D1	L	D2	H1	Package (pcs)
SR0EMV6550640	55	32	M6	40	20	14	100
SR0EMV6550810	55	32	M8	10	20	14	100
SR0EMV6550815	55	32	M8	15	20	14	100
SR0EMV6550820	55	32	M8	20	20	14	100
SR0EMV6550825	55	32	M8	25	20	14	100
SR0EMV6550830	55	32	M8	30	20	14	100
SR0EMV6550835	55	32	M8	35	20	14	100
SR0EMV6550840	55	32	M8	40	20	14	100
SR0EMV6550850	55	32	M8	50	20	14	100
SR0EMV6550860	55	32	M8	60	20	14	100
SR0EMV6551015	55	32	M10	15	20	14	100
SR0EMV6551020	55	32	M10	20	20	14	100
SR0EMV6551025	55	32	M10	25	20	14	100
SR0EMV6551030	55	32	M10	30	20	14	100
SR0EMV6551035	55	32	M10	35	20	14	100
SR0EMV6551040	55	32	M10	40	20	14	100
SR0EMV6551050	55	32	M10	50	20	14	100
SR0EMV6551060	55	32	M10	60	20	14	100

MATERIAL - SURFACE TREATMENT
Grip: PA6 (Polyamide)
Bushing: OT58 (Brass)

COLOUR
NE Black

NOTES
Available in other colours and materials.

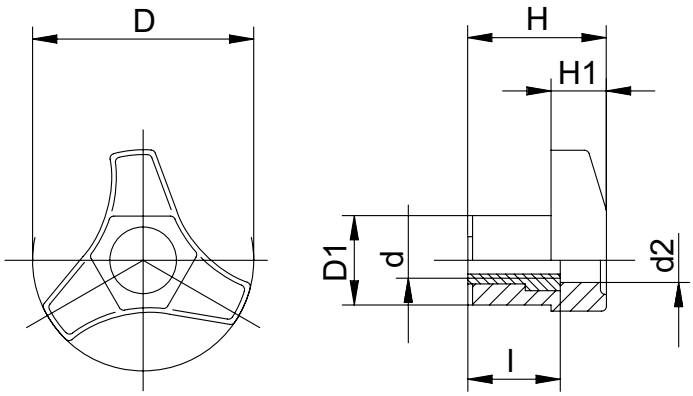

Code NE	D	H	d	l	H1	D1	d2	Package (pcs)
SR0EMV6450699	45	27	M6	15	11	17	7,5	100
SR0EMV6450899	45	27	M8	15	11	17	9,5	100
SR0EMV6451099	45	27	M10	15	11	17	11,5	100
SR0EMV6550899	55	32	M8	20	14	20	9,5	50
SR0EMV6551099	55	32	M10	20	14	20	11,5	50
SR0EMV6551299	55	32	M12	20	14	20	13,5	50

THREE-ARM KNOB
with blind threaded bushing

MATERIAL - SURFACE TREATMENT
Grip: PA6 (Polyamide)
Bushing: OT58 (Brass)

COLOUR
NE Black

NOTES
Available in other colours and materials.

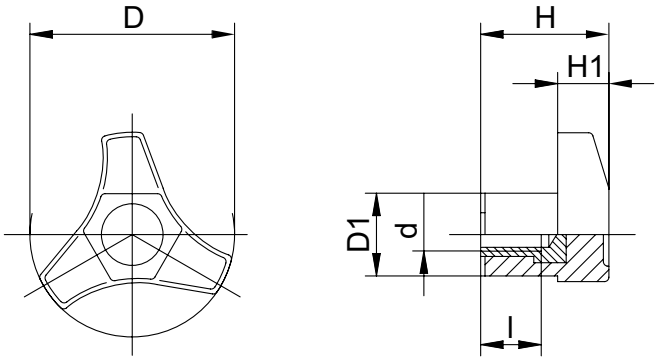

Code NE	D	H	d	l	D1	H1	Package (pcs)
SR0EMV6450600	45	27	M6	13	17	11	100
SR0EMV6450800	45	27	M8	16	17	11	100
SR0EMV6451000	45	27	M10	17	17	11	100
SR0EMV6550800	55	32	M8	16	20	14	50
SR0EMV6551000	55	32	M10	17	20	14	50
SR0EMV6551200	55	32	M12	17	20	14	50

MATERIAL - SURFACE TREATMENT
Grip: TMP (Thermoplastic)
Stud: Cl 5.8 (Steel) zinc plated
AISI303 (Stainless steel)

COLOUR
Grip: GN Blackish grey
Cap: GV Grey RAL 7021
G5 Grey RAL 7035
R2 Red RAL 3020
G1 Yellow RAL 1021

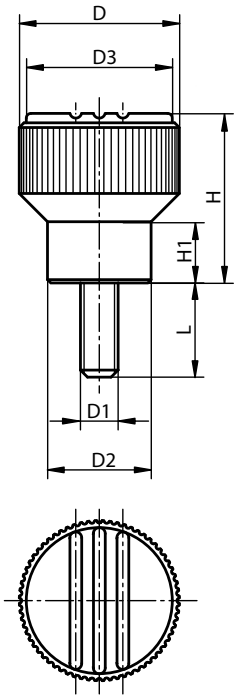

Code Cl 5.8	Code AISI303	Colour cap	D	H	D1	L	D2	D3	H1	Package (pcs)
KP0247105X10	KP02470105X10	GV	21	22	M5	10	14	19	8	1
KP0247105X12	KP02470105X12	GV	21	22	M5	12	14	19	8	1
KP0247105X15	KP02470105X15	GV	21	22	M5	15	14	19	8	1
KP0247105X20	KP02470105X20	GV	21	22	M5	20	14	19	8	1
KP0247105X25	KP02470105X25	GV	21	22	M5	25	14	19	8	1
KP02471055X10	KP024701055X10	G5	21	22	M5	10	14	19	8	1
KP02471055X12	KP024701055X12	G5	21	22	M5	12	14	19	8	1
KP02471055X15	KP024701055X15	G5	21	22	M5	15	14	19	8	1
KP02471055X20	KP024701055X20	G5	21	22	M5	20	14	19	8	1
KP02471055X25	KP024701055X25	G5	21	22	M5	25	14	19	8	1
KP02471056X10	KP024701056X10	R2	21	22	M5	10	14	19	8	1
KP02471056X12	KP024701056X12	R2	21	22	M5	12	14	19	8	1
KP02471056X15	KP024701056X15	R2	21	22	M5	15	14	19	8	1
KP02471056X20	KP024701056X20	R2	21	22	M5	20	14	19	8	1
KP02471056X25	KP024701056X25	R2	21	22	M5	25	14	19	8	1
KP02471057X10	KP024701057X10	G1	21	22	M5	10	14	19	8	1
KP02471057X12	KP024701057X12	G1	21	22	M5	12	14	19	8	1
KP02471057X15	KP024701057X15	G1	21	22	M5	15	14	19	8	1
KP02471057X20	KP024701057X20	G1	21	22	M5	20	14	19	8	1
KP02471057X25	KP024701057X25	G1	21	22	M5	25	14	19	8	1
KP0247106X15	KP02470106X15	GV	21	22	M6	15	14	19	8	1
KP0247106X20	KP02470106X20	GV	21	22	M6	20	14	19	8	1
KP0247106X25	KP02470106X25	GV	21	22	M6	25	14	19	8	1
KP0247106X30	KP02470106X30	GV	21	22	M6	30	14	19	8	1
KP02471065X15	KP024701065X15	G5	21	22	M6	15	14	19	8	1
KP02471065X20	KP024701065X20	G5	21	22	M6	20	14	19	8	1
KP02471065X25	KP024701065X25	G5	21	22	M6	25	14	19	8	1
KP02471065X30	KP024701065X30	G5	21	22	M6	30	14	19	8	1
KP02471066X15	KP024701066X15	R2	21	22	M6	15	14	19	8	1
KP02471066X20	KP024701066X20	R2	21	22	M6	20	14	19	8	1
KP02471066X25	KP024701066X25	R2	21	22	M6	25	14	19	8	1
KP02471066X30	KP024701066X30	R2	21	22	M6	30	14	19	8	1

KNURLED KNOB
with threaded stud

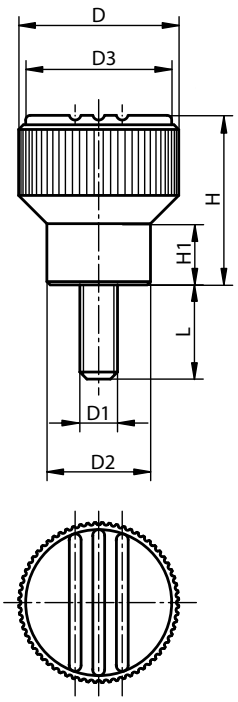

MATERIAL - SURFACE TREATMENT
Grip: TMP (Thermoplastic)
Stud: Cl 5.8 (Steel) zinc plated
AISI303 (Stainless steel)

COLOUR
Grip:
Cap:
GN Blackish grey
GV Grey RAL 7021
G5 Grey RAL 7035
R2 Red RAL 3020
G1 Yellow RAL 1021

Code Cl 5.8	Code AISI303	Colour cap	D	H	D1	L	D2	D3	H1	Package (pcs)
KP02471067X15	KP024701067X15	G1	21	22	M6	15	14	19	8	1
KP02471067X20	KP024701067X20	G1	21	22	M6	20	14	19	8	1
KP02471067X25	KP024701067X25	G1	21	22	M6	25	14	19	8	1
KP02471067X30	KP024701067X30	G1	21	22	M6	30	14	19	8	1
KP0247208X20	KP02470208X20	GV	26	26	M8	20	18	23	9,5	1
KP0247208X25	KP02470208X25	GV	26	26	M8	25	18	23	9,5	1
KP0247208X30	KP02470208X30	GV	26	26	M8	30	18	23	9,5	1
KP0247208X40	KP02470208X40	GV	26	26	M8	40	18	23	9,5	1
KP02472085X20	KP024702085X20	G5	26	26	M8	20	18	23	9,5	1
KP02472085X25	KP024702085X25	G5	26	26	M8	25	18	23	9,5	1
KP02472085X30	KP024702085X30	G5	26	26	M8	30	18	23	9,5	1
KP02472085X40	KP024702085X40	G5	26	26	M8	40	18	23	9,5	1
KP02472086X20	KP024702086X20	R2	26	26	M8	20	18	23	9,5	1
KP02472086X25	KP024702086X25	R2	26	26	M8	25	18	23	9,5	1
KP02472086X30	KP024702086X30	R2	26	26	M8	30	18	23	9,5	1
KP02472086X40	KP024702086X40	R2	26	26	M8	40	18	23	9,5	1
KP02472087X20	KP024702087X20	G1	26	26	M8	20	18	23	9,5	1
KP02472087X25	KP024702087X25	G1	26	26	M8	25	18	23	9,5	1
KP02472087X30	KP024702087X30	G1	26	26	M8	30	18	23	9,5	1
KP02472087X40	KP024702087X40	G1	26	26	M8	40	18	23	9,5	1
KP0247310X20	KP02470310X20	GV	34	36	M10	20	22	31	13	1
KP0247310X30	KP02470310X30	GV	34	36	M10	30	22	31	13	1
KP0247310X40	KP02470310X40	GV	34	36	M10	40	22	31	13	1
KP02473105X20	KP024703105X20	G5	34	36	M10	20	22	31	13	1
KP02473105X30	KP024703105X30	G5	34	36	M10	30	22	31	13	1
KP02473105X40	KP024703105X40	G5	34	36	M10	40	22	31	13	1
KP02473106X20	KP024703106X20	R2	34	36	M10	20	22	31	13	1
KP02473106X30	KP024703106X30	R2	34	36	M10	30	22	31	13	1
KP02473106X40	KP024703106X40	R2	34	36	M10	40	22	31	13	1
KP02473107X20	KP024703107X20	G1	34	36	M10	20	22	31	13	1
KP02473107X30	KP024703107X30	G1	34	36	M10	30	22	31	13	1
KP02473107X40	KP024703107X40	G1	34	36	M10	40	22	31	13	1

MATERIAL - SURFACE TREATMENT
Grip: TMP (Thermoplastic)
Bushing: CI 5.8 (Steel) zinc plated
AISI303 (Stainless steel)

COLOUR
Grip:
Cap:
GN Blackish grey
GV Grey RAL 7021
G5 Grey RAL 7035
R2 Red RAL 3020
G1 Yellow RAL 1021

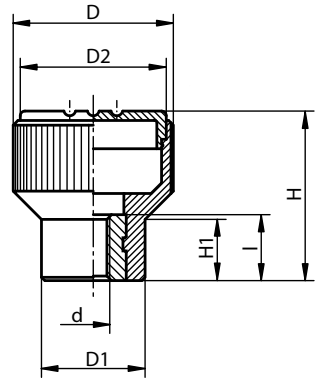

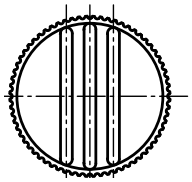

Code CI 5.8	Code AISI303	Colour cap	D	H	d	l	D1	D2	H1	Package (pcs)
KP0247104	KP02470104	GV	21	22	M4	10	14	19	8	1
KP02471045	KP024701045	G5	21	22	M4	10	14	19	8	1
KP02471046	KP024701046	R2	21	22	M4	10	14	19	8	1
KP02471047	KP024701047	G1	21	22	M4	10	14	19	8	1
KP0247105	KP02470105	GV	21	22	M5	10	14	19	8	1
KP02471055	KP024701055	G5	21	22	M5	10	14	19	8	1
KP02471056	KP024701056	R2	21	22	M5	10	14	19	8	1
KP02471057	KP024701057	G1	21	22	M5	10	14	19	8	1
KP0247106	KP02470106	GV	21	22	M6	10	14	19	8	1
KP02471065	KP024701065	G5	21	22	M6	10	14	19	8	1
KP02471066	KP024701066	R2	21	22	M6	10	14	19	8	1
KP02471067	KP024701067	G1	21	22	M6	10	14	19	8	1
KP0247308	KP02470308	GV	34	36	M8	14	22	31	13	1
KP02473085	KP024703085	G5	34	36	M8	14	22	31	13	1
KP02473086	KP024703086	R2	34	36	M8	14	22	31	13	1
KP02473087	KP024703087	G1	34	36	M8	14	22	31	13	1
KP0247208	KP02470208	GV	26	26	M8	14	18	23	9,5	1
KP02472085	KP024702085	G5	26	26	M8	14	18	23	9,5	1
KP02472086	KP024702086	R2	26	26	M8	14	18	23	9,5	1
KP02472087	KP024702087	G1	26	26	M8	14	18	23	9,5	1
KP0247310	KP02470310	GV	34	36	M10	14	22	31	13	1
KP02473105	KP024703105	G5	34	36	M10	14	22	31	13	1
KP02473106	KP024703106	R2	34	36	M10	14	22	31	13	1
KP02473107	KP024703107	G1	34	36	M10	14	22	31	13	1

CROSS-SHAPED KNOB
aluminium - with threaded hole

MATERIAL - SURFACE TREATMENT
Grip: AL (Aluminium) tumbled
Stud: AISI303 (Stainless steel)
Shaft: AISI301 (Stainless steel)

NOTES
Available untreated (not tumbled).

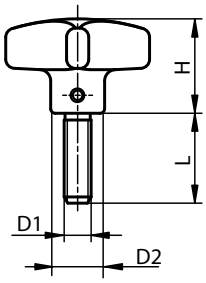

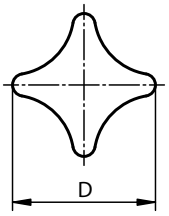

Code	D	D2	D1	H	L	Package (pcs)
KP0145604008X20	40	14	M8	25	20	1
KP0145604008X25	40	14	M8	25	25	1
KP0145604008X30	40	14	M8	25	30	1
KP0145604008X40	40	14	M8	25	40	1
KP0145604008X50	40	14	M8	25	50	1
KP0145605010X20	50	18	M10	32	20	1
KP0145605010X25	50	18	M10	32	25	1
KP0145605010X30	50	18	M10	32	30	1
KP0145605010X40	50	18	M10	32	40	1
KP0145605010X50	50	18	M10	32	50	1
KP0145606312X20	63	25	M12	40	20	1
KP0145606312X30	63	25	M12	40	30	1
KP0145606312X40	63	25	M12	40	40	1
KP0145606312X50	63	25	M12	40	50	1

MATERIAL - SURFACE TREATMENT
Grip: AL (Aluminium) tumbled
AL (Aluminium) ground and polished

NOTES
Available untreated (not tumbled).

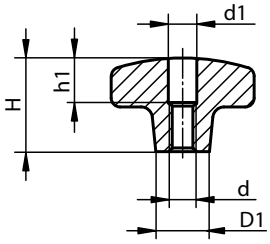

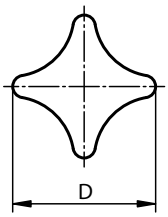

Code tumbled	Code polished	D	D1	d	d1	H	h1	Package (pcs)
KP0145404008	**KP01454040082**	40	14	M8	8,4	25	12	1
KP0145405010	**KP01454050102**	50	18	M10	10,5	32	16	1
KP0145406312	**KP01454063122**	63	25	M12	13	40	20	1
KP0145408016	**KP01454080162**	80	25	M16	17	50	30	1

CROSS-SHAPED KNOB
aluminium with blind threaded hole

MATERIAL - SURFACE TREATMENT
Grip: AL (Aluminium) tumbled
AL (Aluminium) ground and polished

NOTES
Available untreated (not tumbled).

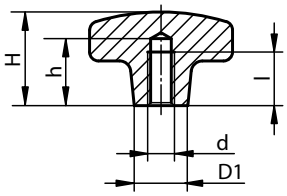

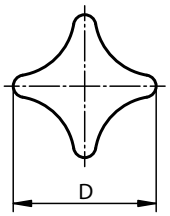

Code tumbled	Code polished	D	D1	d	H	h	l	Package (pcs)
KP0145504008	**KP01455040082**	40	14	M8	25	18	15	1
KP0145505010	**KP01455050102**	50	18	M10	32	21	18	1
KP0145506312	**KP01455063122**	63	25	M12	40	25	22	1
KP0145508016	**KP01455080162**	80	25	M16	50	32	28	1

MATERIAL
Grip: 1.4308 (Stainless steel)
Stud: AISI303 (Stainless steel)
Shaft: AISI301 (Stainless steel)

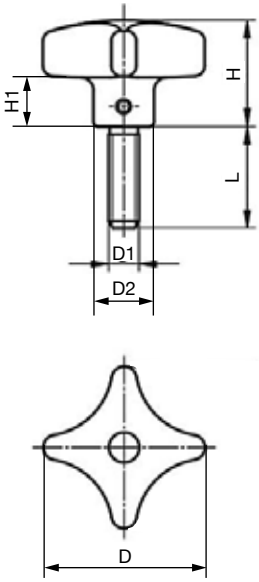

Code	D	H	D1	L	D2	H1	Package (pcs)
KP01466032063X15	32	21	M6	15	12	10	1
KP01466032063X20	32	21	M6	20	12	10	1
KP01466032063X25	32	21	M6	25	12	10	1
KP01466032063X30	32	21	M6	30	12	10	1
KP01466032063X40	32	21	M6	40	12	10	1
KP01466032063X50	32	21	M6	50	12	10	1
KP01466040083X20	40	26	M8	20	14	14	1
KP01466040083X25	40	26	M8	25	14	14	1
KP01466040083X30	40	26	M8	30	14	14	1
KP01466040083X40	40	26	M8	40	14	14	1
KP01466040083X50	40	26	M8	50	14	14	1
KP01466050103X20	50	34	M10	20	18	20	1
KP01466050103X25	50	34	M10	25	18	20	1
KP01466050103X30	50	34	M10	30	18	20	1
KP01466050103X40	50	34	M10	40	18	20	1
KP01466050103X50	50	34	M10	50	18	20	1
KP01466063123X20	63	42	M12	20	20	25	1
KP01466063123X30	63	42	M12	30	20	25	1
KP01466063123X40	63	42	M12	40	20	25	1
KP01466063123X50	63	42	M12	50	20	25	1

CROSS-SHAPED KNOB

stainless steel with threaded through hole

MATERIAL - SURFACE TREATMENT
1.4308 (Stainless steel) ground and polished
1.4308 (Stainless steel) ground and sandblasted

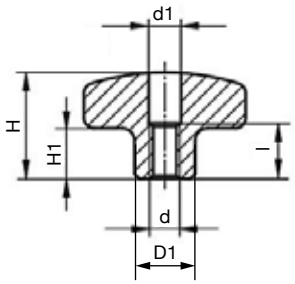

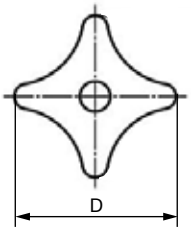

Code polished	Code sandblasted	D	H	d	l	D1	H1	d1	Package (pcs)
KP01464032062	**KP01464032063**	32	21	M6	11	12	10	6,4	1
KP01464040082	**KP01464040083**	40	26	M8	14	14	14	8,4	1
KP01464050102	**KP01464050103**	50	34	M10	18	18	20	10,5	1
KP01464063122	**KP01464063123**	63	42	M12	22	20	25	13	1

MATERIAL - SURFACE TREATMENT
1.4308 (Stainless steel) ground and polished
1.4308 (Stainless steel) ground and sandblasted

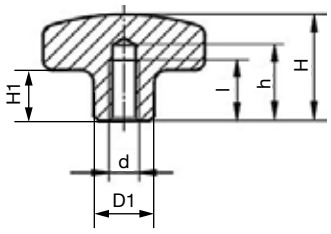

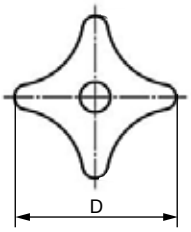

Code polished	Code sandblasted	D	H	d	l	D1	H1	h	Package (pcs)
KP01465032062	**KP01465032063**	32	21	M6	12	12	10	15	1
KP01465040082	**KP01465040083**	40	26	M8	15	14	14	18	1
KP01465050102	**KP01465050103**	50	34	M10	18	18	20	21	1
KP01465063122	**KP01465063123**	63	42	M12	22	20	25	25	1

CROSS-SHAPED KNOB
cast iron with threaded stud

MATERIAL - SURFACE TREATMENT

Grip:	GJL200 (Cast iron) tumbled
Stud:	AISI303 (Stainless steel)
Shaft:	AISI301 (Stainless steel)

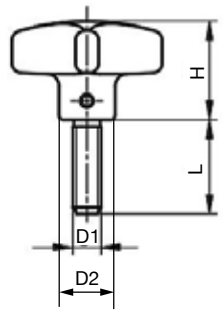

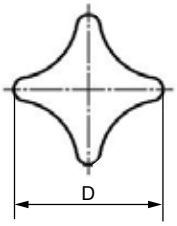

Code	D	H	D1	L	D2	Package (pcs)
KP0147606X15	32	20	M6	15	12	1
KP0147606X20	32	20	M6	20	12	1
KP0147606X25	32	20	M6	25	12	1
KP0147606X30	32	20	M6	30	12	1
KP0147606X40	32	20	M6	40	12	1
KP0147606X50	32	20	M6	50	12	1
KP0147608X20	40	25	M8	20	14	1
KP0147608X25	40	25	M8	25	14	1
KP0147608X30	40	25	M8	30	14	1
KP0147608X40	40	25	M8	40	14	1
KP0147608X50	40	25	M8	50	14	1
KP0147610X20	50	32	M10	20	18	1
KP0147610X25	50	32	M10	25	18	1
KP0147610X30	50	32	M10	30	18	1
KP0147610X40	50	32	M10	40	18	1
KP0147610X50	50	32	M10	50	18	1
KP0147612X20	63	40	M12	20	20	1
KP0147612X30	63	40	M12	30	20	1
KP0147612X40	63	40	M12	40	20	1
KP0147612X50	63	40	M12	50	20	1

MATERIAL - SURFACE TREATMENT
Grip: GJL200 (Cast iron) tumbled

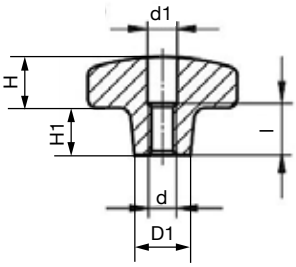

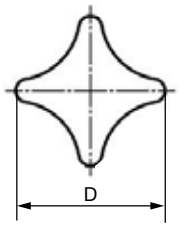

Code	D	H	d	l	D1	H1	d1	Package (pcs)
KP0147406	32	20	M6	10	12	10	6,4	1
KP0147408	40	25	M8	13	14	14	8,4	1
KP0147410	50	32	M10	16	18	20	10,5	1
KP0147412	63	40	M12	20	20	25	13	1
KP0147416	80	50	M16	20	25	30	17	1
KP0147420	100	63	M20	25	32	38	21	1

CROSS-SHAPED KNOB
cast iron with blind threaded hole

MATERIAL - SURFACE TREATMENT
Grip: GJL200 (Cast iron) tumbled

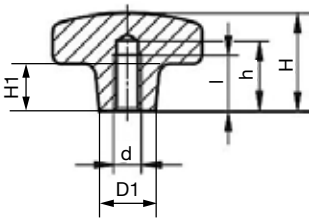

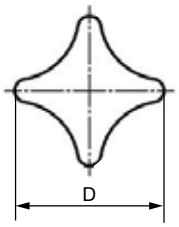

Code	D	H	d	l	D1	H1	h	Package (pcs)
KP0147506	32	20	M6	12	12	10	15	1
KP0147508	40	25	M8	15	14	14	18	1
KP0147510	50	32	M10	18	18	20	21	1
KP0147512	63	40	M12	22	20	25	25	1
KP0147516	80	50	M16	28	25	30	32	1
KP0147520	100	63	M20	36	32	38	40	1

MATERIALE
AISI304 (Stainless steel) ground polished
AISI304 (Stainless steel) ground sandblasted

NOTES
Available with external threading.

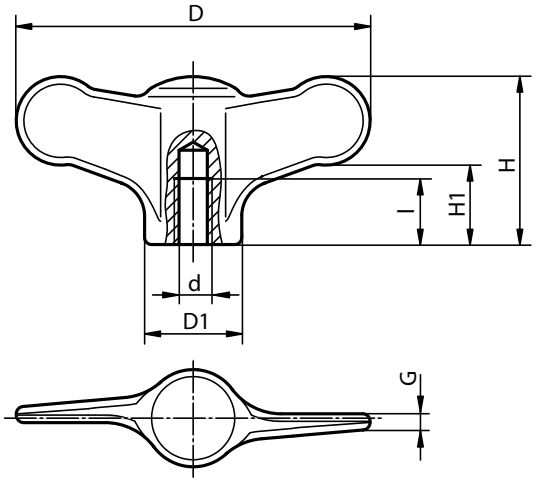

Code polished	Code sandblasted	D	H	d	l	D1	H1	G	Package (pcs)
KP0273904	**KP02739041**	38	18	M4	9	10,5	8,5	1,7	1
KP0273905	**KP02739051**	38	18	M5	9	10,5	8,5	1,7	1
KP0273906	**KP02739061**	38	18	M6	9	10,5	8,5	1,7	1
KP0273105	**KP02731051**	50	24	M5	12	14	11,5	2,3	1
KP0273106	**KP02731061**	50	24	M6	12	14	11,5	2,3	1
KP0273208	**KP02732081**	75	35	M8	15	21	16,5	3,4	1
KP0273210	**KP02732101**	75	35	M10	15	21	16,5	3,4	1

WING SCREW
plastic grip

MATERIAL - SURFACE TREATMENT
Grip: TMP (Thermoplastic)
Pin: Cl 5.8 (Steel) zinc plated
AISI303 (Stainless steel)

COLOUR
Grip:
Cap:
GN Blackish grey
GV Grey RAL 7021
G5 Grey RAL 7035
R2 Red RAL 3020
G1 Yellow RAL 1021

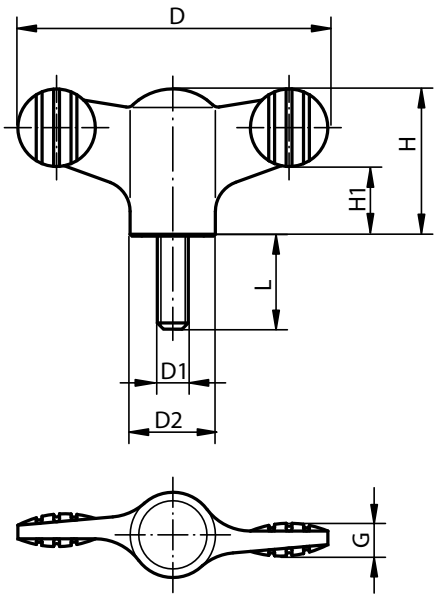

Code Cl 5.8	Code AISI303	Colour cap	D	H	D1	L	D2	H1	G	Package (pcs)
KP0274904X10	KP02740904X10	GV	38	18	M4	10	12	8,5		1
KP0274904X15	KP02740904X15	GV	38	18	M4	15	12	8,5		1
KP02749045X10	KP027409045X10	G5	38	18	M4	10	12	8,5		1
KP02749045X15	KP027409045X15	G5	38	18	M4	15	12	8,5		1
KP02749046X10	KP027409046X10	R2	38	18	M4	10	12	8,5		1
KP02749046X15	KP027409046X15	R2	38	18	M4	15	12	8,5		1
KP02749047X10	KP027409047X10	G1	38	18	M4	10	12	8,5		1
KP02749047X15	KP027409047X15	G1	38	18	M4	15	12	8,5		1
KP0274905X15	KP02740905X15	GV	38	18	M5	15	12	8,5		1
KP0274905X20	KP02740905X20	GV	38	18	M5	20	12	8,5		1
KP0274905X30	KP02740905X30	GV	38	18	M5	30	12	8,5		1
KP02749055X15	KP027409055X15	G5	38	18	M5	15	12	8,5		1
KP02749055X20	KP027409055X20	G5	38	18	M5	20	12	8,5		1
KP02749055X30	KP027409055X30	G5	38	18	M5	30	12	8,5		1
KP02749056X15	KP027409056X15	R2	38	18	M5	15	12	8,5		1
KP02749056X20	KP027409056X20	R2	38	18	M5	20	12	8,5		1
KP02749056X30	KP027409056X30	R2	38	18	M5	30	12	8,5		1
KP02749057X15	KP027409057X15	G1	38	18	M5	15	12	8,5		1
KP02749057X20	KP027409057X20	G1	38	18	M5	20	12	8,5		1
KP02749057X30	KP027409057X30	G1	38	18	M5	30	12	8,5		1
KP0274906X20	KP02740906X20	GV	38	18	M6	20	12	8,5		1
KP0274906X30	KP02740906X30	GV	38	18	M6	30	12	8,5		1
KP0274906X40	KP02740906X40	GV	38	18	M6	40	12	8,5		1
KP02749065X20	KP027409065X20	G5	38	18	M6	20	12	8,5		1
KP02749065X30	KP027409065X30	G5	38	18	M6	30	12	8,5		1
KP02749065X40	KP027409065X40	G5	38	18	M6	40	12	8,5		1
KP02749066X20	KP027409066X20	R2	38	18	M6	20	12	8,5		1
KP02749066X30	KP027409066X30	R2	38	18	M6	30	12	8,5		1
KP02749066X40	KP027409066X40	R2	38	18	M6	40	12	8,5		1
KP02749067X20	KP027409067X20	G1	38	18	M6	20	12	8,5		1
KP02749067X30	KP027409067X30	G1	38	18	M6	30	12	8,5		1
KP02749067X40	KP027409067X40	G1	38	18	M6	40	12	8,5		1

www.gberardi.com - ic@gberardi.com

MATERIAL - SURFACE TREATMENT
Grip: TMP (Thermoplastic)
Pin: Cl 5.8 (Steel) zinc plated
AISI303 (Stainless steel)

COLOUR
Grip:
Cap:
GN Blackish grey
GV Grey RAL 7021
G5 Grey RAL 7035
R2 Red RAL 3020
G1 Yellow RAL 1021

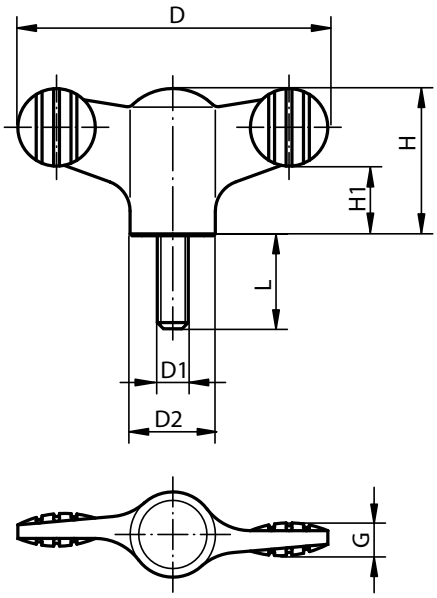

Code Cl 5.8	Code AISI303	Colour cap	D	H	D1	L	D2	H1	G	Package (pcs)
KP0274105X15	KP02740105X25	GV	50	24	M5	15	14	11,5		1
KP0274105X20	KP02740105X20	GV	50	24	M5	20	14	11,5		1
KP02741055X15	KP027401055X15	G5	50	24	M5	15	14	11,5		1
KP02741055X20	KP027401055X20	G5	50	24	M5	20	14	11,5		1
KP02741056X15	KP027401056X15	R2	50	24	M5	15	14	11,5		1
KP02741056X20	KP027401056X20	R2	50	24	M5	20	14	11,5		1
KP02741057X15	KP027401057X15	G1	50	24	M5	15	14	11,5		1
KP02741057X20	KP027401057X20	G1	50	24	M5	20	14	11,5		1
KP0274106X20	KP02740106X20	GV	50	24	M6	20	14	11,5		1
KP0274106X30	KP02740106X30	GV	50	24	M6	30	14	11,5		1
KP0274106X40	KP02740106X40	GV	50	24	M6	40	14	11,5		1
KP02741065X20	KP027401065X20	G5	50	24	M6	20	14	11,5		1
KP02741065X30	KP027401065X30	G5	50	24	M6	30	14	11,5		1
KP02741065X40	KP027401065X40	G5	50	24	M6	40	14	11,5		1
KP02741066X20	KP027401066X20	R2	50	24	M6	20	14	11,5		1
KP02741066X30	KP027401066X30	R2	50	24	M6	30	14	11,5		1
KP02741066X40	KP027401066X40	R2	50	24	M6	40	14	11,5		1
KP02741067X20	KP027401067X20	G1	50	24	M6	20	14	11,5		1
KP02741067X30	KP027401067X30	G1	50	24	M6	30	14	11,5		1
KP02741067X40	KP027401067X40	G1	50	24	M6	40	14	11,5		1
KP0274108X20	KP02740108X20	GV	50	24	M8	20	14	11,5		1
KP0274108X30	KP02740108X30	GV	50	24	M8	30	14	11,5		1
KP0274108X40	KP02740108X40	GV	50	24	M8	40	14	11,5		1
KP02741085X20	KP027401085X20	G5	50	24	M8	20	14	11,5		1
KP02741085X30	KP027401085X30	G5	50	24	M8	30	14	11,5		1
KP02741085X40	KP027401085X40	G5	50	24	M8	40	14	11,5		1
KP02741086X20	KP027401086X20	R2	50	24	M8	20	14	11,5		1
KP02741086X30	KP027401086X30	R2	50	24	M8	30	14	11,5		1
KP02741086X40	KP027401086X40	R2	50	24	M8	40	14	11,5		1
KP02741087X20	KP027401087X20	G1	50	24	M8	20	14	11,5		1
KP02741087X30	KP027401087X30	G1	50	24	M8	30	14	11,5		1
KP02741087X40	KP027401087X40	G1	50	24	M8	40	14	11,5		1

WING SCREW
plastic grip

MATERIAL - SURFACE TREATMENT
Grip: TMP (Thermoplastic)
Pin: Cl 5.8 (Steel) zinc plated
AISI303 (Stainless steel)

COLOUR
Grip:
Cap:
GN Blackish grey
GV Grey RAL 7021
G5 Grey RAL 7035
R2 Red RAL 3020
G1 Yellow RAL 1021

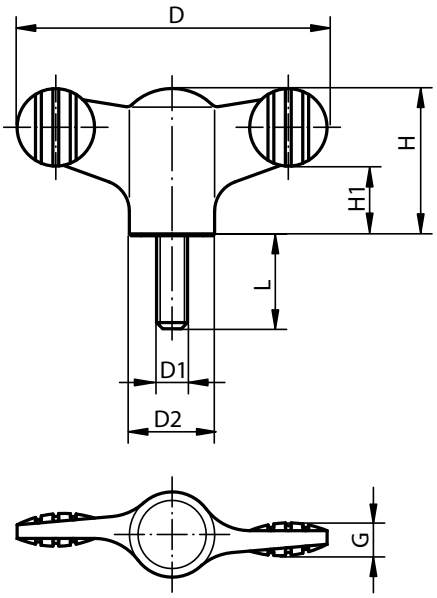

Code Cl 5.8	Code AISI303	Colour cap	D	H	D1	L	D2	H1	G	Package (pcs)
KP0274208X20	KP02740208X20	GV	75	35,6	M8	20	21	16,5		1
KP0274208X30	KP02740208X30	GV	75	35,6	M8	30	21	16,5		1
KP0274208X40	KP02740208X40	GV	75	35,6	M8	40	21	16,5		1
KP02742085X20	KP027402085X20	G5	75	35,6	M8	20	21	16,5		1
KP02742085X30	KP027402085X30	G5	75	35,6	M8	30	21	16,5		1
KP02742085X40	KP027402085X40	G5	75	35,6	M8	40	21	16,5		1
KP02742086X20	KP027402086X20	R2	75	35,6	M8	20	21	16,5		1
KP02742086X30	KP027402086X30	R2	75	35,6	M8	30	21	16,5		1
KP02742086X40	KP027402086X40	R2	75	35,6	M8	40	21	16,5		1
KP02742087X20	KP027402087X20	G1	75	35,6	M8	20	21	16,5		1
KP02742087X30	KP027402087X30	G1	75	35,6	M8	30	21	16,5		1
KP02742087X40	KP027402087X40	G1	75	35,6	M8	40	21	16,5		1
KP0274210X20	KP02740210X20	GV	75	35,6	M10	20	21	16,5		1
KP0274210X30	KP02740210X30	GV	75	35,6	M10	30	21	16,5		1
KP0274210X40	KP02740210X40	GV	75	35,6	M10	40	21	16,5		1
KP0274210X50	KP02740210X50	GV	75	35,6	M10	50	21	16,5		1
KP02742105X20	KP027402105X20	G5	75	35,6	M10	20	21	16,5		1
KP02742105X30	KP027402105X30	G5	75	35,6	M10	30	21	16,5		1
KP02742105X40	KP027402105X40	G5	75	35,6	M10	40	21	16,5		1
KP02742105X50	KP027402105X50	G5	75	35,6	M10	50	21	16,5		1
KP02742106X20	KP027402106X20	R2	75	35,6	M10	20	21	16,5		1
KP02742106X30	KP027402106X30	R2	75	35,6	M10	30	21	16,5		1
KP02742106X40	KP027402106X40	R2	75	35,6	M10	40	21	16,5		1
KP02742106X50	KP027402106X50	R2	75	35,6	M10	50	21	16,5		1
KP02742107X20	KP027402107X20	G1	75	35,6	M10	20	21	16,5		1
KP02742107X30	KP027402107X30	G1	75	35,6	M10	30	21	16,5		1
KP02742107X40	KP027402107X40	G1	75	35,6	M10	40	21	16,5		1
KP02742107X50	KP027402107X50	G1	75	35,6	M10	50	21	16,5		1

MATERIAL - SURFACE TREATMENT
Grip: TMP (Thermoplastic)
Bushing: Cl 5.8 (Steel) zinc plated
AISI303 (Stainless steel)

COLOUR
Grip:
Cap:
GN Blackish grey
GV Grey RAL 7021
G5 Grey RAL 7035
R2 Red RAL 3020
G1 Yellow RAL 1021

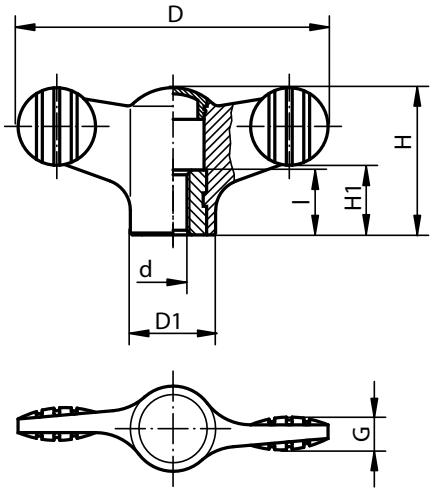

Code Cl 5.8	Code AISI303	Colour cap	D	H	d	l	D1	H1	G	Package (pcs)
KP0274904	KP02740904	GV	38	18	M4	10	12	8,5	4,5	1
KP02749045	KP027409045	G5	38	18	M4	10	12	8,5	4,5	1
KP02749046	KP027409046	R2	38	18	M4	10	12	8,5	4,5	1
KP02749047	KP027409047	G1	38	18	M4	10	12	8,5	4,5	1
KP0274905	KP02740905	GV	38	18	M5	10	12	8,5	4,5	1
KP02749055	KP027409055	G5	38	18	M5	10	12	8,5	4,5	1
KP02749056	KP027409056	R2	38	18	M5	10	12	8,5	4,5	1
KP02749057	KP027409057	G1	38	18	M5	10	12	8,5	4,5	1
KP0274906	KP02740906	GV	38	18	M6	10	12	8,5	4,5	1
KP02749065	KP027409065	G5	38	18	M6	10	12	8,5	4,5	1
KP02749066	KP027409066	R2	38	18	M6	10	12	8,5	4,5	1
KP02749067	KP027409067	G1	38	18	M6	10	12	8,5	4,5	1
KP0274105	KP02740105	GV	50	24	M5	10	14	11,5	5	1
KP02741055	KP027401055	G5	50	24	M5	10	14	11,5	5	1
KP02741056	KP027401056	R2	50	24	M5	10	14	11,5	5	1
KP02741057	KP027401057	G1	50	24	M5	10	14	11,5	5	1
KP0274106	KP02740106	GV	50	24	M6	10	14	11,5	5	1
KP02741065	KP027401065	G5	50	24	M6	10	14	11,5	5	1
KP02741066	KP027401066	R2	50	24	M6	10	14	11,5	5	1
KP02741067	KP027401067	G1	50	24	M6	10	14	11,5	5	1
KP0274208	KP02740208	GV	75	35,6	M8	14	21	16,5	7	1
KP02742085	KP027402085	G5	75	35,6	M8	14	21	16,5	7	1
KP02742086	KP027402086	R2	75	35,6	M8	14	21	16,5	7	1
KP02742087	KP027402087	G1	75	35,6	M8	14	21	16,5	7	1
KP0274210	KP02740210	GV	75	35,6	M10	14	21	16,5	7	1
KP02742105	KP027402105	G5	75	35,6	M10	14	21	16,5	7	1
KP02742106	KP027402106	R2	75	35,6	M10	14	21	16,5	7	1
KP02742107	KP027402107	G1	75	35,6	M10	14	21	16,5	7	1

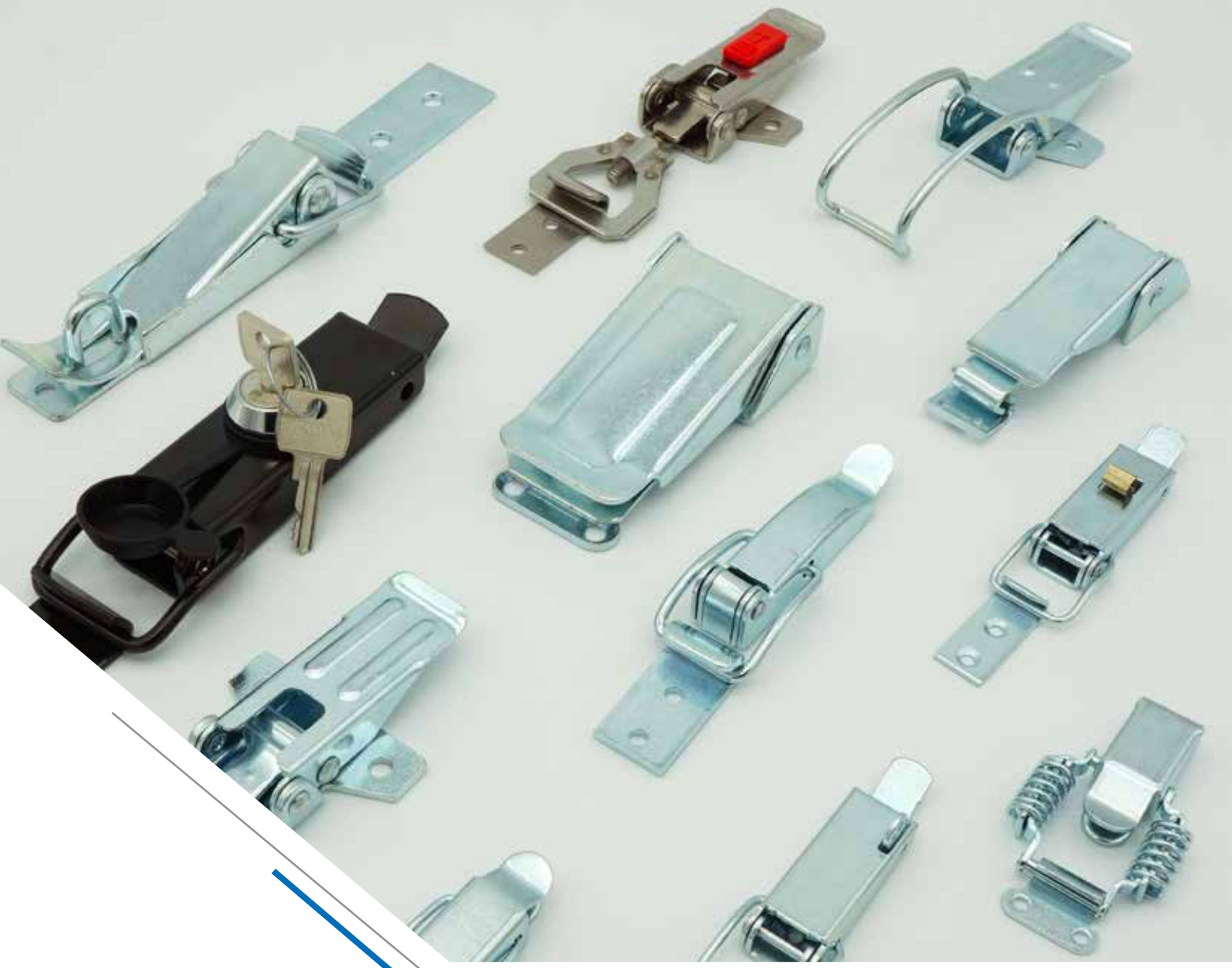

14

TOOGLE LATCHES

Toogle latches
page 14.1

Toggle latches for padlock
page 14.16

Toggle latches with safety catch
page 14.22

Adjustable toggle latches
page 14.25

Adjustable latches for padlock
page 14.31

Adjustable latches with safety catch
page 14.34

Spring loaded toggle latch
page 14.37

Striker plates
page 14.38

MATERIAL - SURFACE TREATMENT
DC01 (Steel) white galvanized

NOTES
* 1 DaN (decanewton) = 1.02 Kgf (kilogram-force).

ACCESSORIES
The recommended standard striker plate is the one in the table below, but other available types are shown on the specific page.

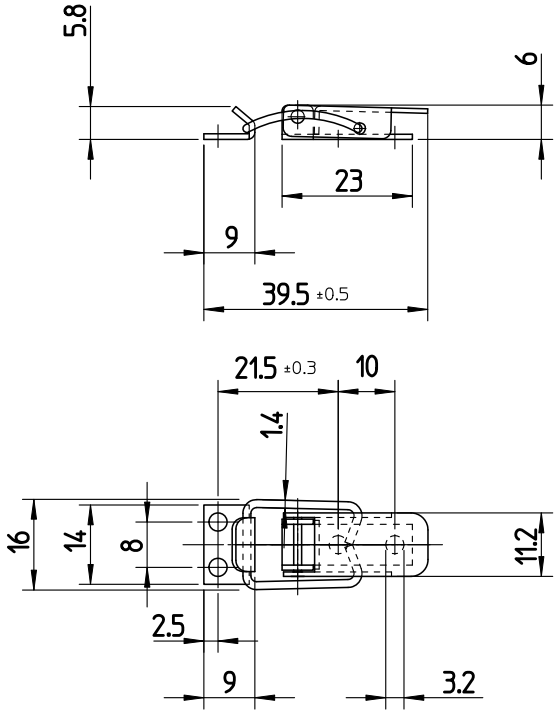

Code DC01 white galvanized	Product	Max working load (DaN) *	Max tension load (DaN) *	Package (pcs)
CS395AO501001	Latch + Striker plate	15	30	200
CS39500000001	Latch	15	30	200
CS005AO000001	Striker plate	-	-	200

MATERIAL - SURFACE TREATMENT
DC01 (Steel)
DC01 (Steel) white galvanized
DC01 (Steel) nickel-plated
AISI304 (Stainless steel)

NOTES
* 1 DaN (decanewton) = 1.02 Kgf (kilogram-force).

ACCESSORIES
The recommended standard striker plate is the one in the table below, but other available types are shown on the specific page.

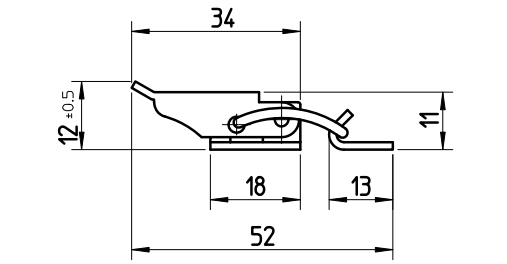

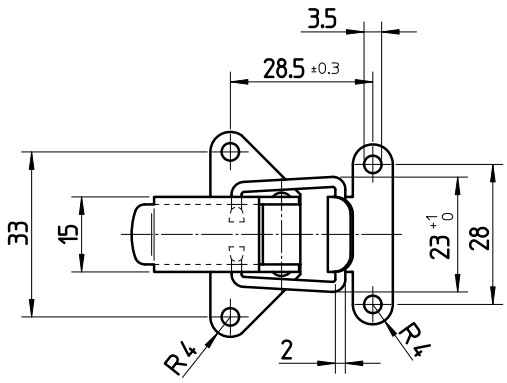

Code DC01	Code DC01 white galvanized	Code DC01 nickel-plated	Code AISI304	Product	Max working load (DaN) *	Max tension load (DaN) *	Package (pcs)
-	**CS125AG501001**	**CS125AG508008**	**CS126AG600000**	Latch + Striker plate	55	150	200
CS12500000000	**CS12500000001**	**CS12500000008**	**CS12600000000**	Latch	55	150	600
CS005AG000000	**CS005AG000001**	**CS005AG000008**	**CS006AG000000**	Striker plate	-	-	200

MATERIAL - SURFACE TREATMENT
DC01 (Steel) white galvanized

NOTES
* 1 DaN (decanewton) = 1.02 Kgf (kilogram-force).

ACCESSORIES
The recommended standard striker plate is the one in the table below, but other available types are shown on the specific page.

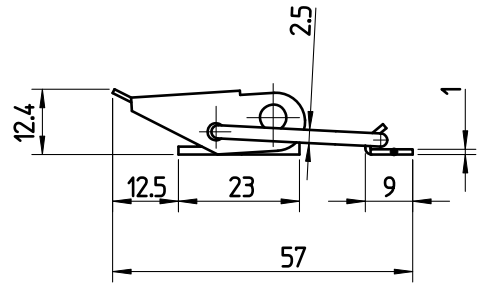

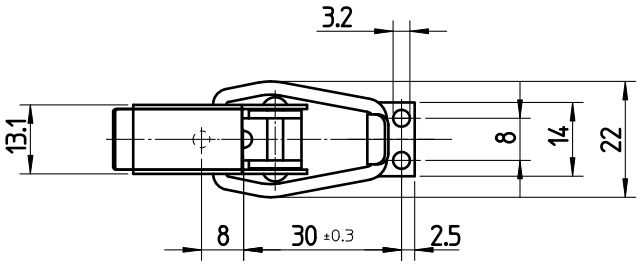

Code DC01 white galvanized	Product	Max working load (DaN) *	Max tension load (DaN) *	Package (pcs)
CS265AO501001	Latch + Striker plate	40	100	200
CS26500000001	Latch	40	100	200
CS005AO000001	Striker plate	-	-	200

MATERIAL - SURFACE TREATMENT
DC01 (Steel) white galvanized
AISI304 (Stainless steel)

NOTES
* 1 DaN (decanewton) = 1.02 Kgf (kilogram-force).

ACCESSORIES
The recommended standard striker plate is the one in the table below, but other available types are shown on the specific page.

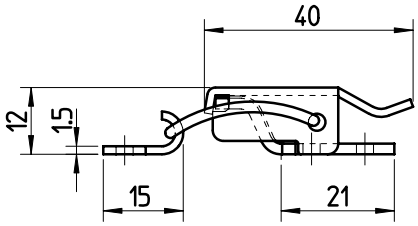

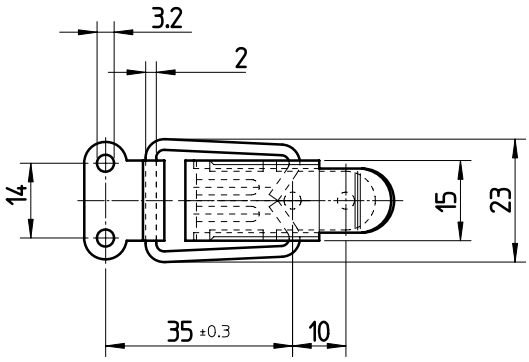

Code DC01 white galvanized	Code AISI304	Product	Max working load (DaN) *	Max tension load (DaN) *	Package (pcs)
CS385AN501001	**CS386AN600000**	Latch + Striker plate	55	100	100
CS38500000001	**CS38600000000**	Latch	55	100	500
CS005AN000001	**CS006AN000000**	Striker plate	-	-	100

MATERIAL - SURFACE TREATMENT
DC01 (Steel)
DC01 (Steel) white galvanized
DC01 (Steel) nickel-plated
AISI304 (Stainless steel)

NOTES
* 1 DaN (decanewton) = 1.02 Kgf (kilogram-force).

ACCESSORIES
The recommended standard striker plate is the one in the table below, but other available types are shown on the specific page.

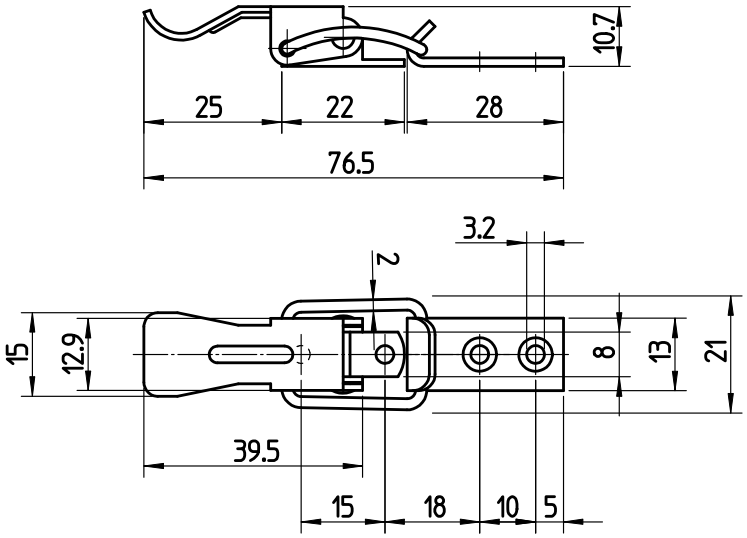

Code DC01	Code DC01 white galvanized	Code DC01 nickel-plated	Code AISI304	Product	Max working load (DaN) *	Max tension load (DaN) *	Package (pcs)
-	CS075AD501001	CS075AD508008	CS076AD600000	Latch + Striker plate	40	100	200
CS07500000000	CS07500000001	CS07500000008	CS07600000000	Latch	40	100	600
CS005AD000000	CS005AD000001	CS005AD000008	CS006AD000000	Striker plate	-	-	200

MATERIAL - SURFACE TREATMENT
DC01 (Steel) white galvanized

NOTES
* 1 DaN (decanewton) = 1.02 Kgf (kilogram-force).

ACCESSORIES
The recommended standard striker plate is the one in the table below, but other available types are shown on the specific page.

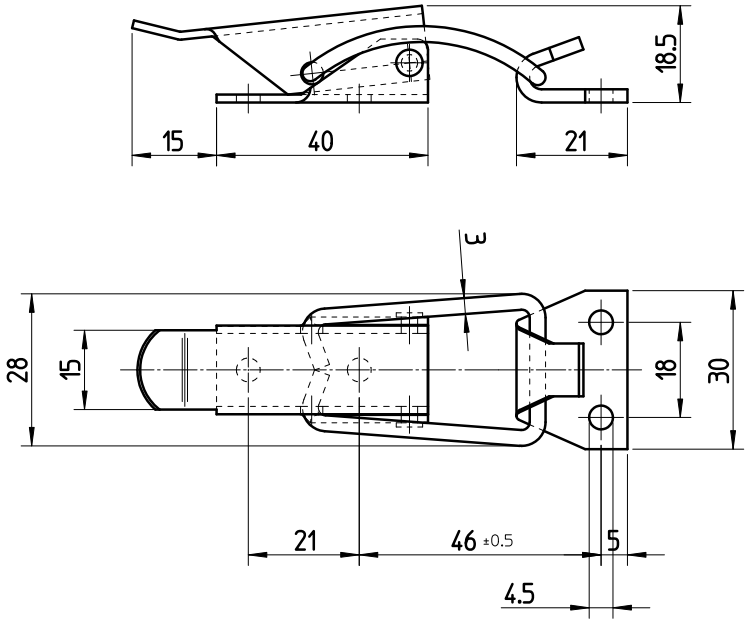

Code DC01 white galvanized	Product	Max working load (DaN) *	Max tension load (DaN) *	Package (pcs)
CS415AQ501001	Latch + Striker plate	100	250	50
CS41500000001	Latch	100	250	250
CS005AQ000001	Striker plate	-	-	50

MATERIAL - SURFACE TREATMENT
DC01 (Steel) white galvanized

NOTES
* 1 DaN (decanewton) = 1.02 Kgf (kilogram-force).

ACCESSORIES
The recommended standard striker plate is the one in the table below, but other available types are shown on the specific page.

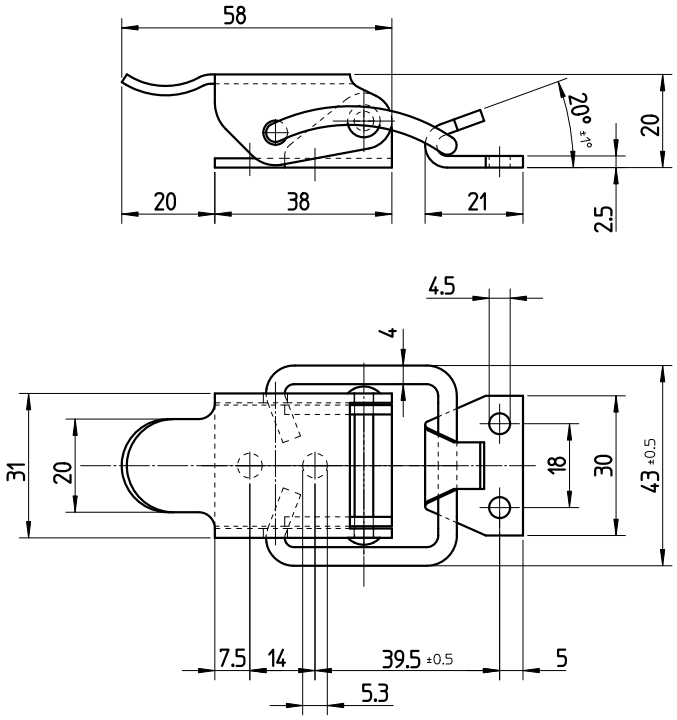

Code DC01 white galvanized	Product	Max working load (DaN) *	Max tension load (DaN) *	Package (pcs)
CS255AQ501001	Latch + Striker plate	150	300	50
CS25500000001	Latch	150	300	200
CS005AQ000001	Striker plate	-	-	50

MATERIAL - SURFACE TREATMENT
DC01 (Steel)
DC01 (Steel) white galvanized
DC01 (Steel) nickel-plated
AISI304 (Stainless steel)

NOTES
* 1 DaN (decanewton) = 1.02 Kgf (kilogram-force).

ACCESSORIES
The recommended standard striker plate is the one in the table below, but other available types are shown on the specific page.

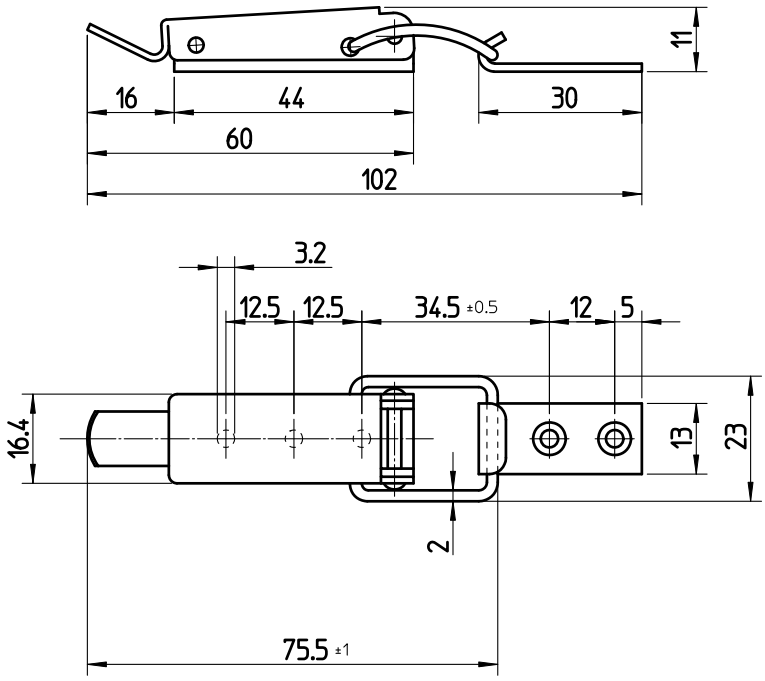

Code DC01	Code DC01 white galvanized	Code DC01 nickel-plated	Code AISI304	Product	Max working load (DaN) *	Max tension load (DaN) *	Package (pcs)
-	**CS095AF501001**	**CS095AF508008**	**CS096AF600000**	Latch + Striker plate	55	130	150
CS09500000000	**CS09500000001**	**CS09500000008**	**CS09600000000**	Latch	55	130	500
CS005AF000000	**CS005AF000001**	**CS005AF000008**	**CS006AF000000**	Striker plate	-	-	500

MATERIAL - SURFACE TREATMENT
DC01 (Steel)
DC01 (Steel) white galvanized
DC01 (Steel) nickel-plated
AISI304 (Stainless steel)

NOTES
* 1 DaN (decanewton) = 1.02 Kgf (kilogram-force).

ACCESSORIES
The recommended standard striker plate is the one in the table below, but other available types are shown on the specific page.

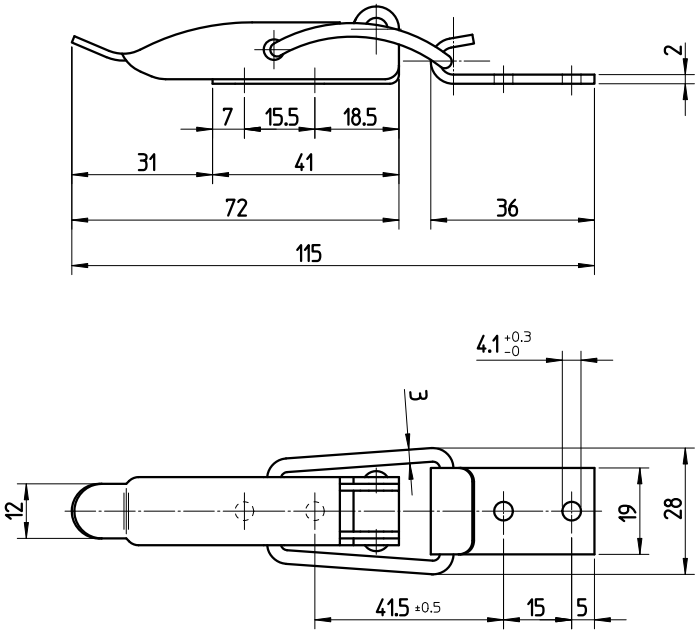

Code DC01	Code DC01 white galvanized	Code DC01 nickel-plated	Code AISI304	Product	Max working load (DaN) *	Max tension load (DaN) *	Package (pcs)
-	**CS195AI501001**	**CS195AI508008**	**CS196AI600100**	Latch + Striker plate	100	250	50
CS19500000000	**CS19500000001**	**CS19500000008**	**CS19600000100**	Latch	100	250	250
CS005AI000000	-	-	-	Striker plate	-	-	200
-	**CS005AI000001**	**CS005AI000008**	**CS006AI000000**	Striker plate	-	-	25

MATERIAL - SURFACE TREATMENT
DC01 (Steel)
DC01 (Steel) white galvanized
DC01 (Steel) nickel-plated
AISI304 (Stainless steel)

NOTES
* 1 DaN (decanewton) = 1.02 Kgf (kilogram-force).

ACCESSORIES
The recommended standard striker plate is the one in the table below, but other available types are shown on the specific page.

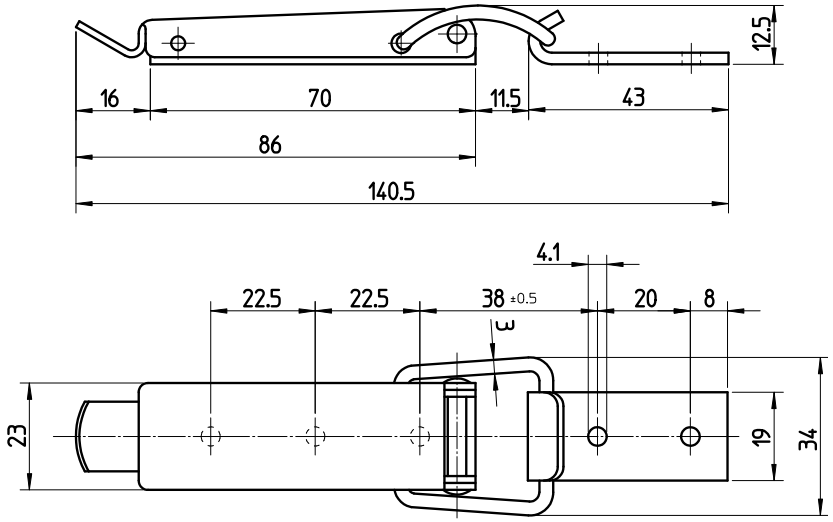

Code DC01	Code DC01 white galvanized	Code DC01 nickel-plated	Code AISI304	Product	Max working load (DaN) *	Max tension load (DaN) *	Package (pcs)
-	**CS055AC501001**	**CS055AC508008**	**CS056AC600000**	Latch + Striker plate	150	300	50
CS05500000000	**CS05500000001**	**CS05500000008**	**CS05600000000**	Latch	150	300	250
CS005AC000000	-	-	-	Striker plate	-	-	250
-	**CS005AC000001**	**CS005AC000008**	**CS006AC000000**	Striker plate	-	-	50

MATERIAL - SURFACE TREATMENT
DC01 (Steel)
DC01 (Steel) white galvanized
DC01 (Steel) nickel-plated
AISI304 (Stainless steel)

NOTES
In the steel version, the holes on the recommended striker plate are countersunk.
* 1 DaN (decanewton) = 1.02 Kgf (kilogram-force).

ACCESSORIES
The recommended standard striker plate is the one in the table below, but other available types are shown on the specific page.

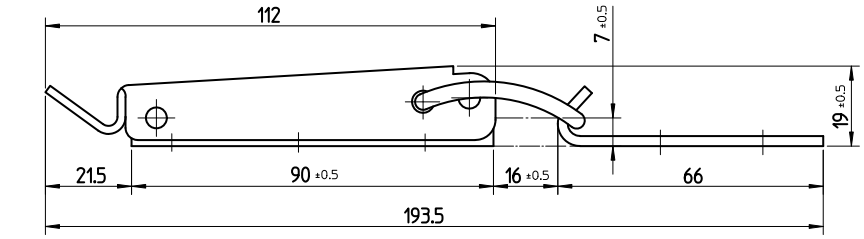

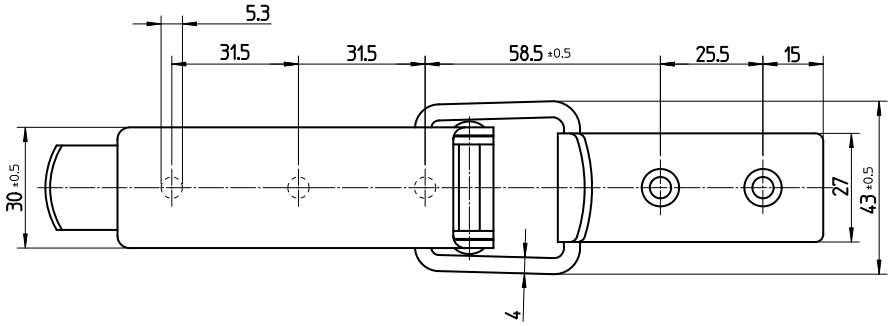

Code DC01	Code DC01 white galvanized	Code DC01 nickel-plated	Code AISI304	Product	Max working load (DaN) *	Max tension load (DaN) *	Package (pcs)
-	**CS015AB501001**	**CS015AB508008**	**CS016AA600000**	Latch + Striker plate	200	400	25
CS01500000000	**CS01500000001**	**CS01500000008**	**CS01600000000**	Latch	200	400	100
CS005AB000000	-	-	-	Striker plate	-	-	100
-	**CS005AB000001**	**CS005AB000008**	**CS006AA000000**	Striker plate	-	-	25

MATERIAL - SURFACE TREATMENT
DC01 (Steel)
DC01 (Steel) white galvanized
DC01 (Steel) nickel-plated
AISI304 (Stainless steel)

NOTES
* 1 DaN (decanewton) = 1.02 Kgf (kilogram-force).

ACCESSORIES
There is no recommended standard striker plate, but there are various types available shown on the specific page.

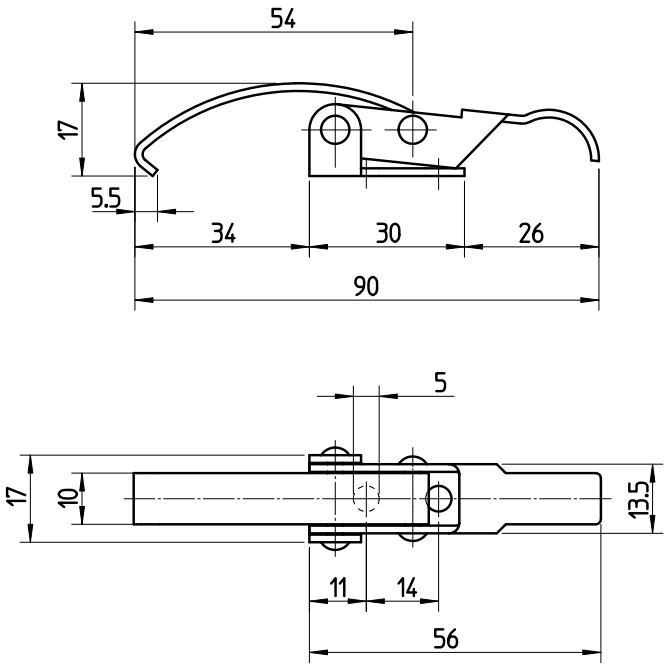

Code DC01	Code DC01 white galvanized	Code DC01 nickel-plated	Code AISI304	Product	Max working load (DaN) *	Max tension load (DaN) *	Package (pcs)
CS22500000000	-	-	-	Latch	50	90	500
-	**CS22500000001**	**CS22500000008**	**CS22600000000**	Latch	50	90	100

MATERIAL - SURFACE TREATMENT
DC01 (Steel) white galvanized

NOTES
* 1 DaN (decanewton) = 1.02 Kgf (kilogram-force).

ACCESSORIES
There is no recommended standard striker plate, but there are various types available shown on the specific page.

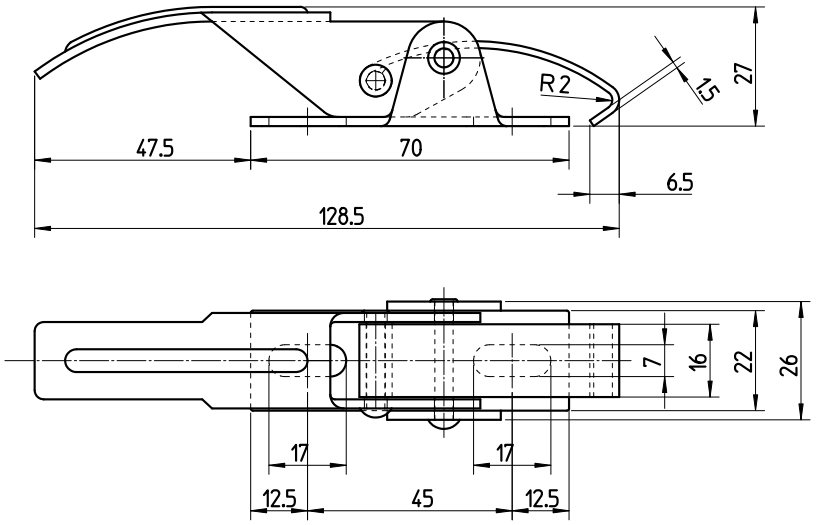

Code DC01 white galvanized	Product	Max working load (DaN) *	Max tension load (DaN) *	Package (pcs)
CS29500000001	Latch	75	150	100

MATERIAL - SURFACE TREATMENT
DC01 (Steel) white galvanized

NOTES
* 1 DaN (decanewton) = 1.02 Kgf (kilogram-force).

ACCESSORIES
There is no recommended standard striker plate, but there are various types available shown on the specific page.

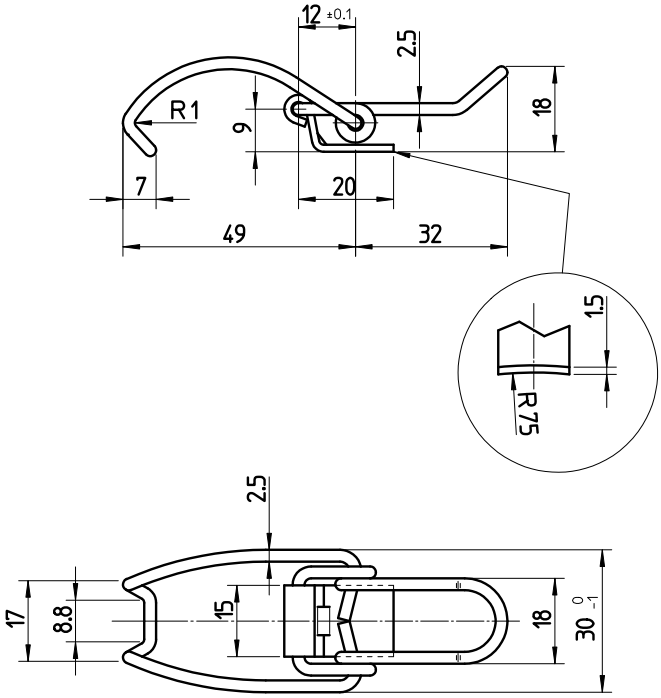

Code DC01 white galvanized	Product	Max working load (DaN) *	Max tension load (DaN) *	Package (pcs)
CS21500000001	Lattch	30	60	500

MATERIAL - SURFACE TREATMENT
DC01 (Steel) white galvanized

NOTES
* 1 DaN (decanewton) = 1.02 Kgf (kilogram-force).

ACCESSORIES
There is no recommended standard striker plate, but there are various types available shown on the specific page.

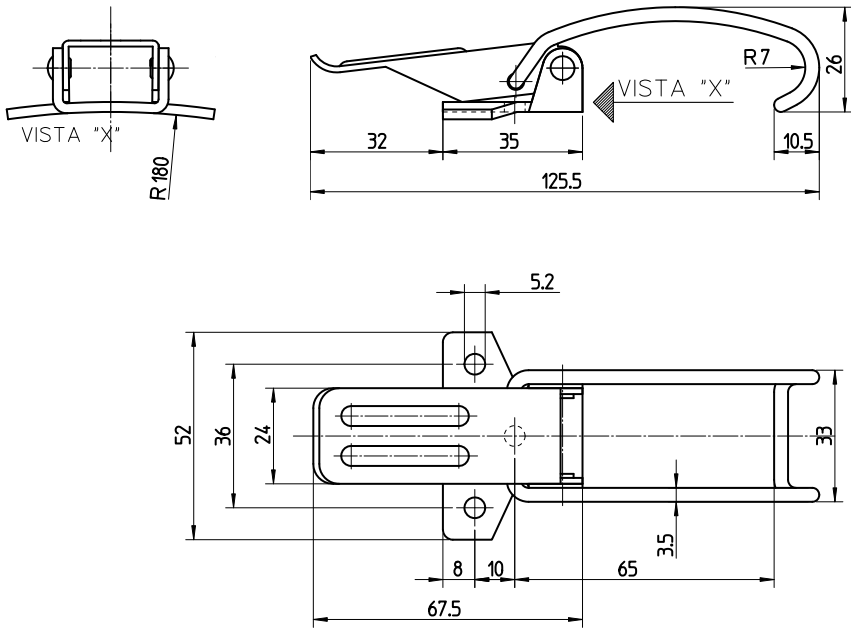

Code DC01 white galvanized	Product	Max working load (DaN) *	Max tension load (DaN) *	Package (pcs)
CS16500000001	Latch	20	100	200

MATERIAL - SURFACE TREATMENT
DC01 (Steel)
DC01 (Steel) white galvanized
DC01 (Steel) nickel-plated
AISI304 (Stainless steel)

NOTES
* 1 DaN (decanewton) = 1.02 Kgf (kilogram-force).

ACCESSORIES
The recommended standard striker plate is the one in the table below, but other available types are shown on the specific page.

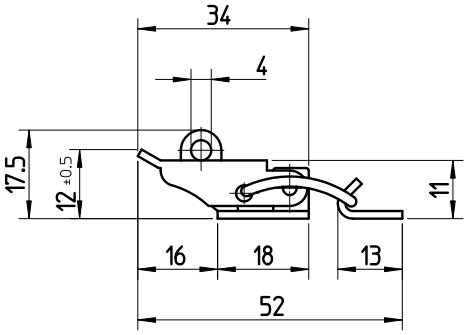

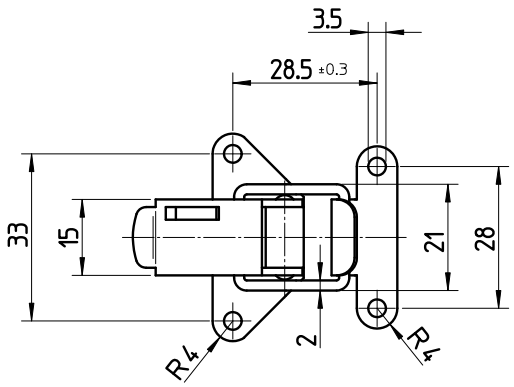

Code DC01	Code DC01 white galvanized	Code DC01 nickel-plated	Code AISI304	Product	Max working load (DaN) *	Max tension load (DaN) *	Package (pcs)
-	**CS145AG501001**	**CS145AG508008**	-	Latch + Striker plate	55	150	200
CS14500000000	**CS14500000001**	**CS14500000008**	**CS005AG000000**	Latch	55	150	600
-	**CS005AG000001**	**CS005AG000008**	**CS006AG000000**	Striker plate	-	-	200

MATERIAL - SURFACE TREATMENT
DC01 (Steel)
DC01 (Steel) white galvanized
DC01 (Steel) nickel-plated
AISI304 (Stainless steel)

NOTES
* 1 DaN (decanewton) = 1.02 Kgf (kilogram-force).

ACCESSORIES
The recommended standard striker plate is the one in the table below, but other available types are shown on the specific page.

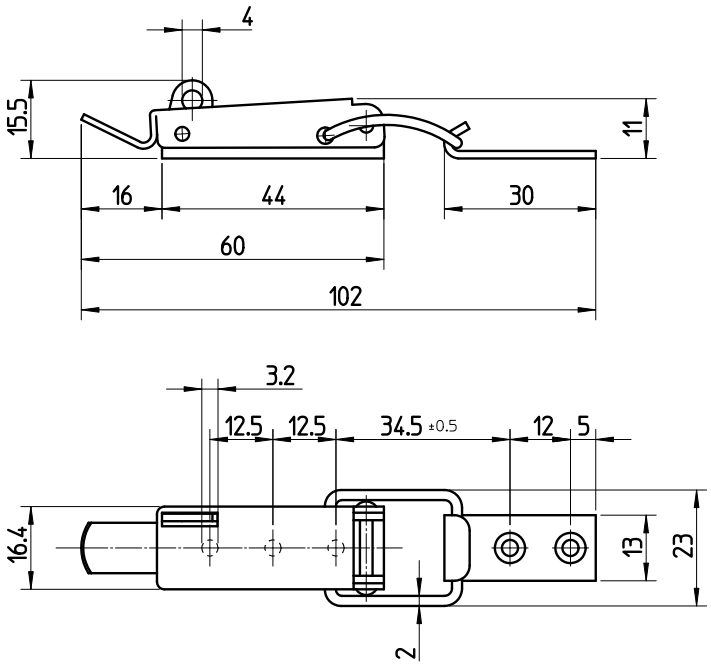

Code DC01	Code DC01 white galvanized	Code DC01 nickel-plated	Code AISI304	Product	Max working load (DaN)*	Max tension load (DaN)*	Package (pcs)
-	**CS105AF501001**	**CS105AF508008**	**CS106AF600000**	Latch + Striker plate	55	130	150
CS10500000000	**CS10500000001**	**CS10500000008**	**CS10600000000**	Latch	55	130	500
CS005AF000000	-	-	-	Striker plate	-	-	500
-	**CS005AF000001**	**CS005AF000008**	**CS006AF000000**	Striker plate	-	-	150

MATERIAL - SURFACE TREATMENT
DC01 (Steel)
DC01 (Steel) white galvanized
DC01 (Steel) nickel-plated
AISI304 (Stainless steel)

NOTES
* 1 DaN (decanewton) = 1.02 Kgf (kilogram-force).

ACCESSORIES
The recommended standard striker plate is the one in the table below, but other available types are shown on the specific page.

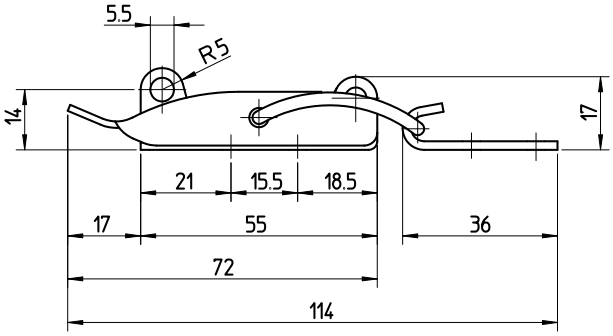

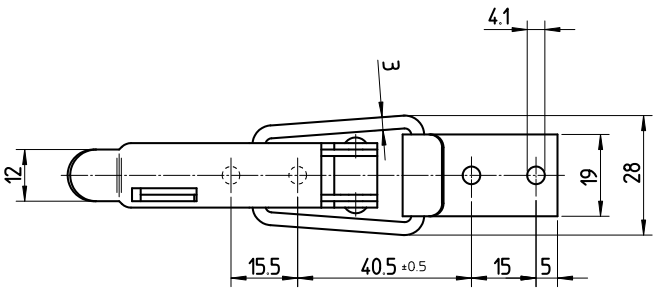

Code DC01	Code DC01 white galvanized	Code DC01 nickel-plated	Code AISI304	Product	Max working load (DaN) *	Max tension load (DaN) *	Package (pcs)
-	**CS205AI501001**	**CS205AI508008**	**CS206AI600100**	Latch + Striker plate	100	250	50
CS20500000000	**CS20500000001**	**CS20500000008**	**CS20600000100**	Latch	100	250	250
CS005AI000000	-	-	-	Striker plate	-	-	200
-	**CS005AI000001**	**CS005AI000008**	**CS006AI000000**	Striker plate	-	-	25

MATERIAL - SURFACE TREATMENT
DC01 (Steel)
DC01 (Steel) white galvanized
DC01 (Steel) nickel-plated
AISI304 (Stainless steel)

NOTES
* 1 DaN (decanewton) = 1.02 Kgf (kilogram-force).

ACCESSORIES
The recommended standard striker plate is the one in the table below, but other available types are shown on the specific page.

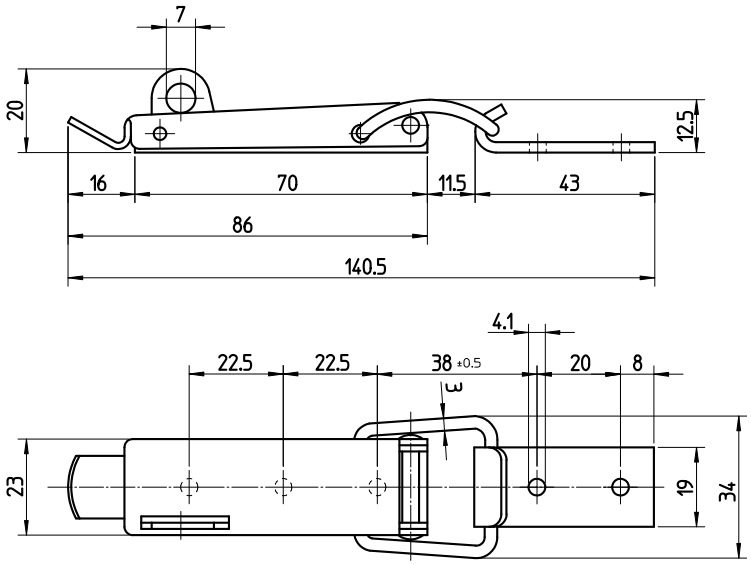

Code DC01	Code DC01 white galvanized	Code DC01 nickel-plated	Code AISI304	Product	Max working load (DaN) *	Max tension load (DaN) *	Package (pcs)
-	**CS065AC501001**	**CS065AC508008**	**CS066AC600000**	Latch + Striker plate	150	300	50
CS06500000000	**CS06500000001**	**CS06500000008**	**CS06600000000**	Latch	150	300	250
CS005AC000000	-	-	-	Striker plate	-	-	250
-	**CS005AC000001**	**CS005AC000008**	**CS006AC000000**	Striker plate	-	-	50

MATERIAL - SURFACE TREATMENT
DC01 (Steel) white galvanized

NOTES
* 1 DaN (decanewton) = 1.02 Kgf (kilogram-force).

ACCESSORIES
The recommended standard striker plate is the one in the table below, but other available types are shown on the specific page.

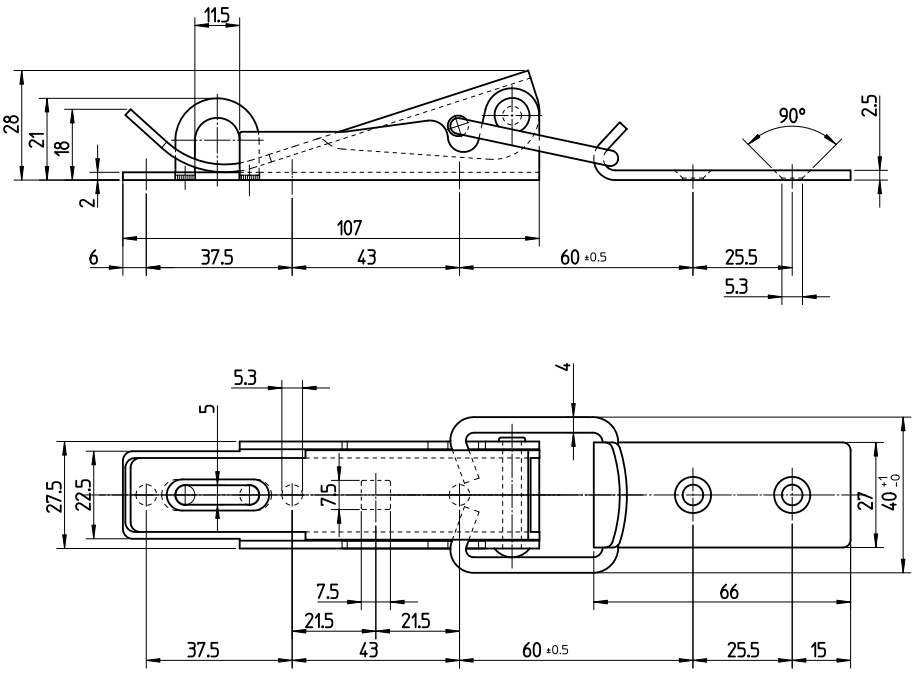

Code DC01 white galvanized	Product	Max working load (DaN) *	Max tension load (DaN) *	Package (pcs)
CS245AB501001	Latch + Striker plate	200	350	25
CS24500000001	Latch	200	350	100
CS005AB000001	Striker plate	-	-	25

MATERIAL - SURFACE TREATMENT
DC01 (Steel)
DC01 (Steel) white galvanized
DC01 (Steel) nickel-plated
AISI304 (Stainless steel)

NOTES
In the steel version, the holes on the recommended striker plate are countersunk.
In the untreated steel version, the ring for the lock is on the opposite side.
* 1 DaN (decanewton) = 1.02 Kgf (kilogram-force).

ACCESSORIES
The recommended standard striker plate is the one in the table below, but other available types are shown on the specific page.

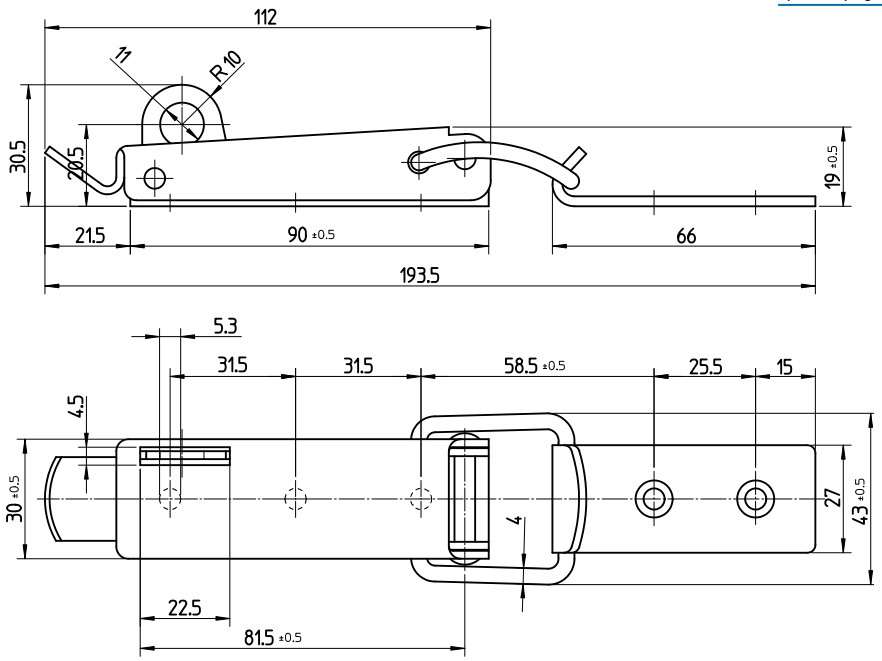

Code DC01	Code DC01 white galvanized	Code DC01 nickel-plated	Code AISI304	Product	Max working load (DaN) *	Max tension load (DaN) *	Package (pcs)
-	**CS025AB501001**	**CS025AB508008**	**CS026AA600000**	Latch + Striker plate	200	400	25
CS02500000100	**CS02500000001**	**CS02500000008**	**CS02600000000**	Latch	200	400	100
CS005AB000000	-	-	-	Striker plate	-	-	100
-	**CS005AB000001**	**CS005AB000008**	**CS006AA000000**	Striker plate	-	-	25

MATERIAL - SURFACE TREATMENT
DC01 (Steel)
DC01 (Steel) white galvanized
DC01 (Steel) nickel-plated
AISI304 (Stainless steel)

NOTES
* 1 DaN (decanewton) = 1.02 Kgf (kilogram-force).

ACCESSORIES
The recommended standard striker plate is the one in the table below, but other available types are shown on the specific page.

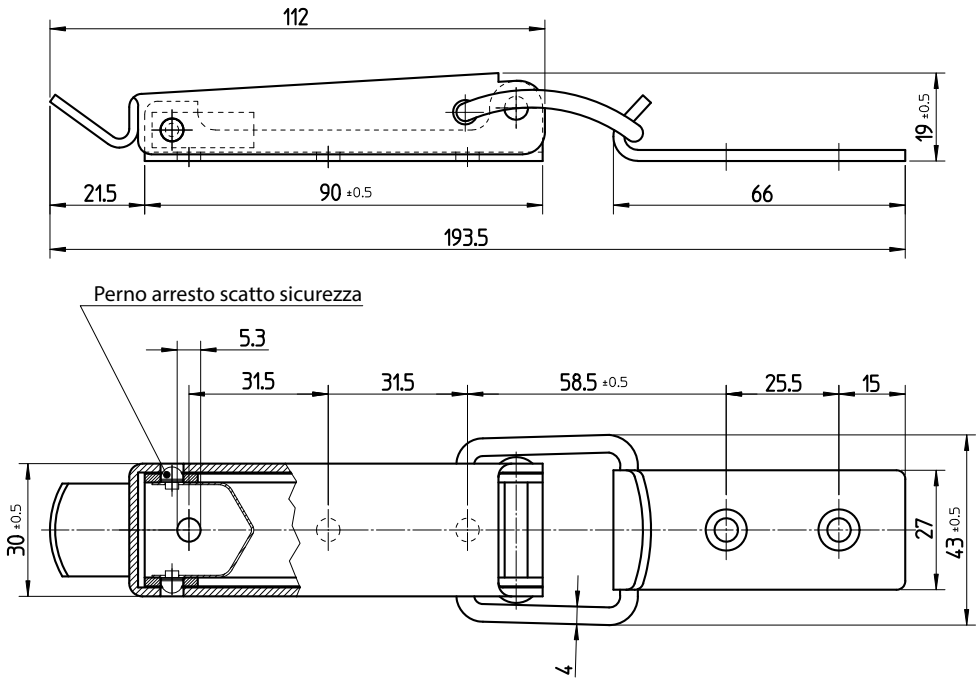

Code DC01	Code DC01 white galvanized	Code DC01 nickel-plated	Code AISI304	Product	Max working load (DaN) *	Max tension load (DaN) *	Package (pcs)
-	**CS045AB501001**	-	**CS046AA600000**	Latch + Striker plate	200	400	25
-	**CS04500000001**	-	**CS04600000000**	Latch	200	400	100
CS005AB000000	-	-	-	Striker plate	-	-	100
-	**CS005AB000001**	**CS005AB000008**	**CS006AA000000**	Striker plate	-	-	25

MATERIAL - SURFACE TREATMENT
DC01 (Steel)
DC01 (Steel) white galvanized
DC01 (Steel) nickel-plated
AISI304 (Stainless steel)

NOTES
* 1 DaN (decanewton) = 1.02 Kgf (kilogram-force).

ACCESSORIES
The recommended standard striker plate is the one in the table below, but other available types are shown on the specific page.

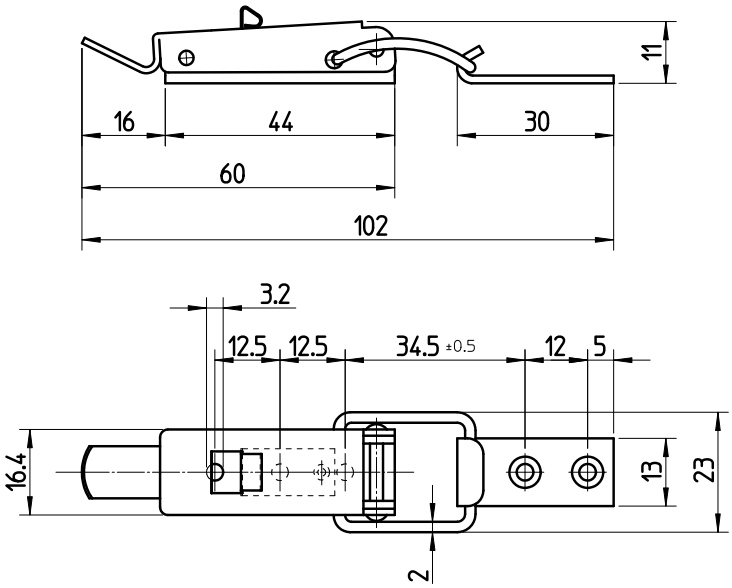

Code DC01	Code DC01 white galvanized	Code DC01 nickel-plated	Code AISI304	Product	Max working load (DaN) *	Max tension load (DaN) *	Package (pcs)
-	**CS115AF501001**		**CS116AF600000**	Latch + Striker plate	55	130	150
-	**CS11500000001**	-	**CS11600000000**	Latch	55	130	500
CS005AF000000	-	-	-	Striker plate	-	-	500
-	**CS005AF000001**	**CS005AF000008**	**CS006AF000000**	Striker plate	-	-	150

MATERIAL - SURFACE TREATMENT
DC01 (Steel) white galvanized
DC01 (Steel) nickel-plated
AISI304 (Stainless steel)

NOTES
In the steel version, the holes on the recommended striker plate are countersunk.
* 1 DaN (decanewton) = 1.02 Kgf (kilogram-force).

ACCESSORIES
The recommended standard striker plate is the one in the table below, but other available types are shown on the specific page.

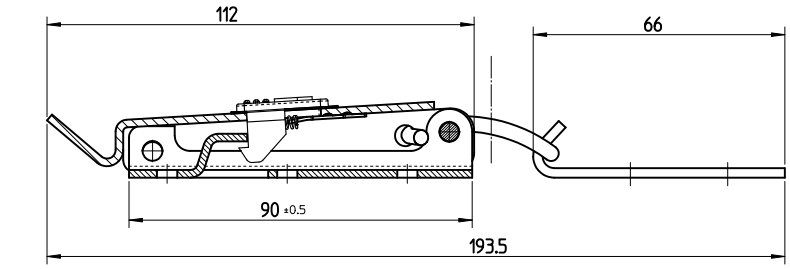

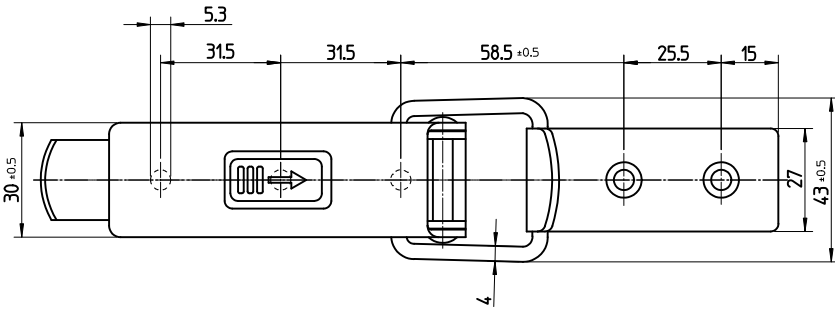

Code DC01 white galvanized	Code DC01 nickel-plated	Code AISI304	Product	Max working load (DaN) *	Max tension load (DaN) *	Package (pcs)
-	**CS035AB508008**	**CS036AA600000**	Latch + Striker plate	200	400	25
-	**CS03500000008**	**CS03600000000**	Latch	200	400	100
CS005AB000001	**CS005AB000008**	**CS006AA000000**	Striker plate	-	-	25

MATERIAL - SURFACE TREATMENT
DC01 (Steel) white galvanized

NOTES
* 1 DaN (decanewton) = 1.02 Kgf (kilogram-force).

ACCESSORIES
The recommended standard striker plate is the one in the table below, but other available types are shown on the specific page.

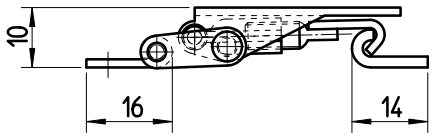

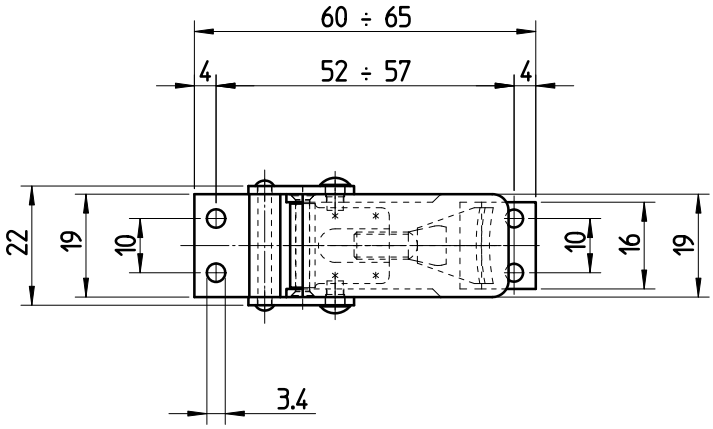

Code DC01 white galvanized	Product	Max working load (DaN) *	Max tension load (DaN) *	Package (pcs)
CS405AP501001	Lattch + Striker plate	75	150	100
CS40500000001	Latch	75	150	500
CS005AP000001	Striker plate	-	-	100

MATERIAL - SURFACE TREATMENT
DC01 (Steel)
DC01 (Steel) white galvanized
DC01 (Steel) nickel-plated
AISI304 (Stainless steel)

NOTES
* 1 DaN (decanewton) = 1.02 Kgf (kilogram-force).

ACCESSORIES
The recommended standard striker plate is the one in the table below, but other available types are shown on the specific page.

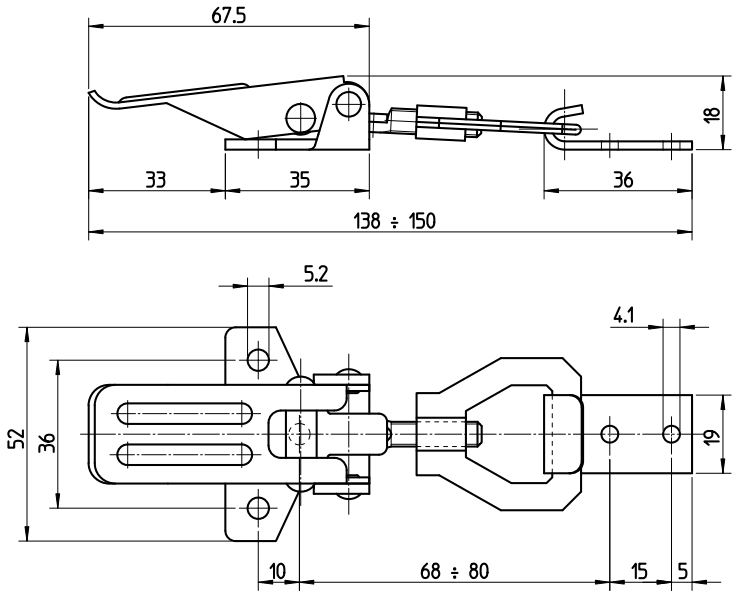

Code DC01	Code DC01 white galvanized	Code DC01 nickel-plated	Code AISI304	Product	Max working load (DaN) *	Max tension load (DaN) *	Package (pcs)
-	**CS175AI501001**	**CS175AI508008**	**CS176AI600000**	Latch + Striker plate	110	250	25
CS17500000000	**CS17500000001**	**CS17500000008**	**CS17600000000**	Latch	110	250	200
CS005AI000000	-	-	-	Striker plate	-	-	200
-	**CS005AI000001**	**CS005AI000008**	**CS006AI000000**	Striker plate	-	-	25

MATERIAL - SURFACE TREATMENT
DC01 (Steel) white galvanized
AISI304 (Stainless steel)

NOTES
* 1 DaN (decanewton) = 1.02 Kgf (kilogram-force).

ACCESSORIES
The recommended standard striker plate is the one in the table below, but other available types are shown on the specific page.

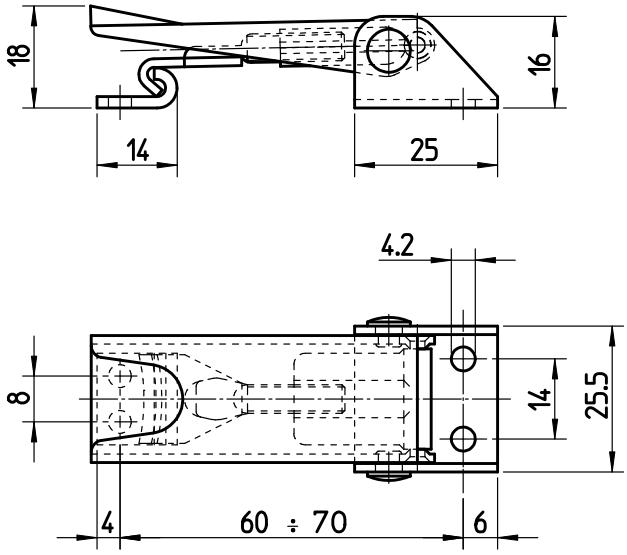

Code DC01 white galvanized	Code AISI304	Product	Max working load (DaN) *	Max tension load (DaN) *	Package (pcs)
CS345AM501001	**CS346AM600000**	Latch + Striker plate	100	140	100
CS34500000001	**CS34600000000**	Latch	100	140	200
CS005AM000001	**CS006AM000000**	Striker plate	-	-	100

MATERIAL - SURFACE TREATMENT
DC01 (Steel) white galvanized
DC01 (Steel) nickel-plated

NOTES
In the steel version, the holes on the recommended striker plate are countersunk.
* 1 DaN (decanewton) = 1.02 Kgf (kilogram-force).

ACCESSORIES
The recommended standard striker plate is the one in the table below, but other available types are shown on the specific page.

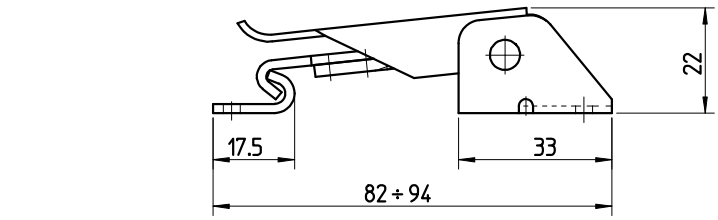

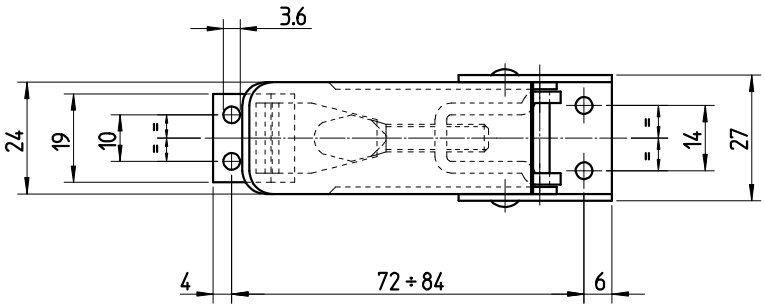

Code DC01 white galvanized	Code DC01 nickel-plated	Product	Max working load (DaN) *	Max tension load (DaN) *	Package (pcs)
CS305AK501001	**CS305AK508008**	Latch + Striker plate	100	200	50
CS30500000001	**CS30500000008**	Latch	100	200	200
CS005AK000001	**CS005AK000008**	Striker plate	-	-	50

MATERIAL - SURFACE TREATMENT
DC01 (Steel) white galvanized
AISI304 (Stainless steel)

NOTES
* 1 DaN (decanewton) = 1.02 Kgf (kilogram-force).

ACCESSORIES
The recommended standard striker plate is the one in the table below, but other available types are shown on the specific page.

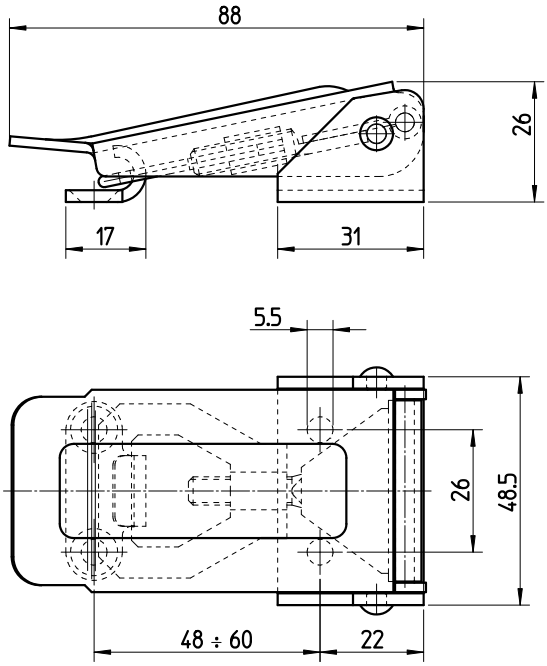

Code DC01 white galvanized	Code AISI304	Product	Max working load (DaN) *	Max tension load (DaN) *	Package (pcs)
CS275AJ501001	**CS276AJ600000**	Latch + Striker plate	150	300	25
CS27500000001	**CS27600000000**	Latch	150	300	100
CS005AJ000001	**CS006AJ000000**	Striker plate	-	-	25

MATERIAL - SURFACE TREATMENT
DC01 (Steel) white galvanized

NOTES
* 1 DaN (decanewton) = 1.02 Kgf (kilogram-force).

ACCESSORIES
The recommended standard striker plate is the one in the table below, but other available types are shown on the specific page.

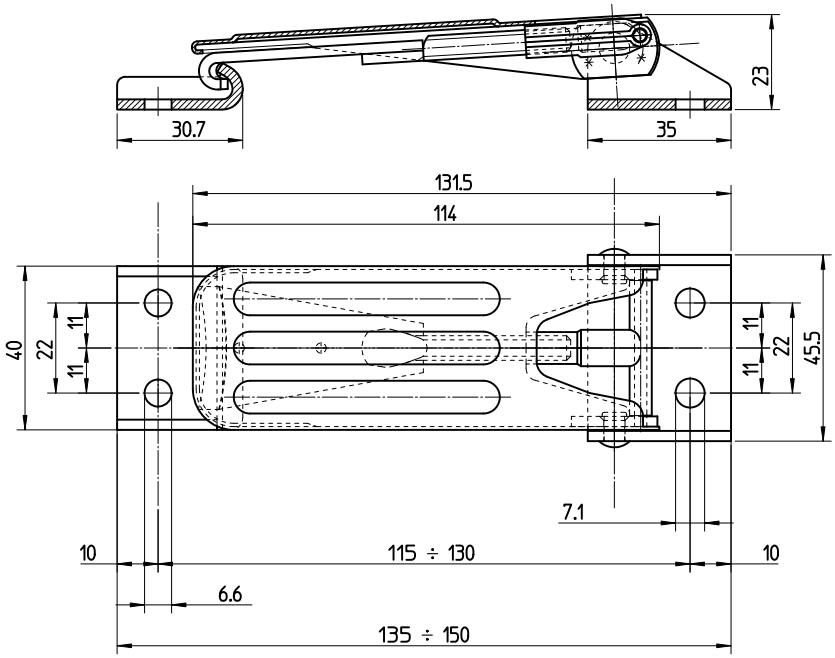

Code DC01 white galvanized	Product	Max working load (DaN) *	Max tension load (DaN) *	Package (pcs)
CS325AL501001	Latch + Striker plate	200	400	25
CS32500000001	Latch	200	400	100
CS005AL000001	Striker plate	-	-	25

MATERIAL - SURFACE TREATMENT
DC01 (Steel) white galvanized
AISI304 (Stainless steel)

NOTES
* 1 DaN (decanewton) = 1.02 Kgf (kilogram-force).

ACCESSORIES
The recommended standard striker plate is the one in the table below, but other available types are shown on the specific page.

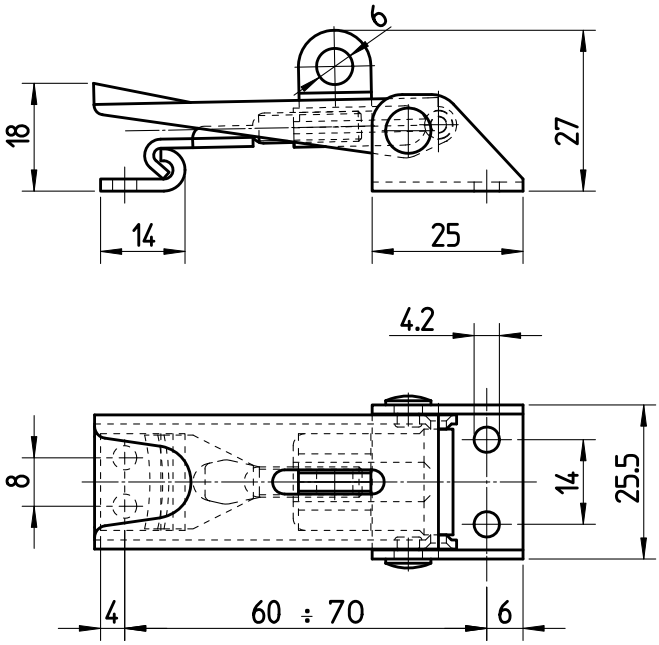

Code DC01 white galvanized	Code AISI304	Product	Max working load (DaN) *	Max tension load (DaN) *	Package (pcs)
CS355AM501001	**CS356AM600000**	Lattch + Striker plate	100	140	100
CS35500000001	**CS35600000000**	Latch	100	140	200
CS005AM000001	**CS006AM000000**	Striker plate	-	-	100

MATERIAL - SURFACE TREATMENT
DC01 (Steel) white galvanized

NOTES
* 1 DaN (decanewton) = 1.02 Kgf (kilogram-force).

ACCESSORIES
The recommended standard striker plate is the one in the table below, but other available types are shown on the specific page.

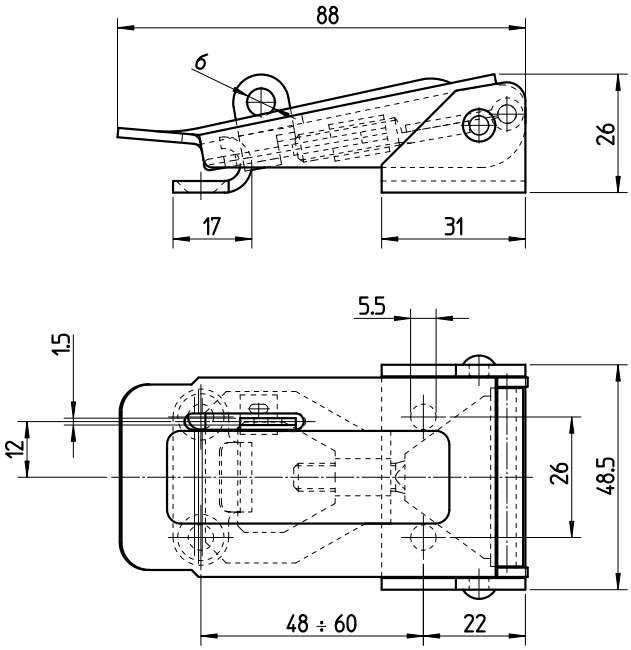

Code DC01 white galvanized	Product	Max working load (DaN) *	Max tension load (DaN) *	Package (pcs)
CS285AJ501001	Latch + Striker plate	150	300	25
CS28500000001	Latch	150	300	100
CS005AJ000001	Striker plate	-	-	25

MATERIAL - SURFACE TREATMENT
DC01 (Steel) white galvanized

NOTES
* 1 DaN (decanewton) = 1.02 Kgf (kilogram-force).

ACCESSORIES
The recommended standard striker plate is the one in the table below, but other available types are shown on the specific page.

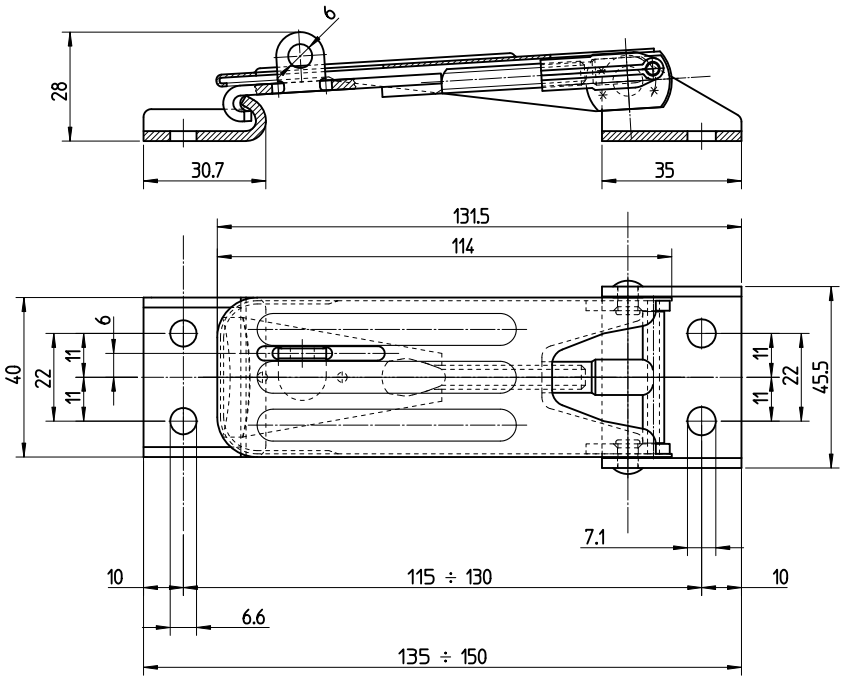

Code DC01 white galvanized	Product	Max working load (DaN) *	Max tension load (DaN) *	Package (pcs)
CS335AL501001	Latch + Striker plate	200	400	25
CS33500000001	Latch	200	400	100
CS005AL000001	Striker plate	-	-	25

MATERIAL - SURFACE TREATMENT
DC01 (Steel) white galvanized
AISI304 (Stainless steel)

NOTES
* 1 DaN (decanewton) = 1.02 Kgf (kilogram-force).

ACCESSORIES
The recommended standard striker plate is the one in the table below, but other available types are shown on the specific page.

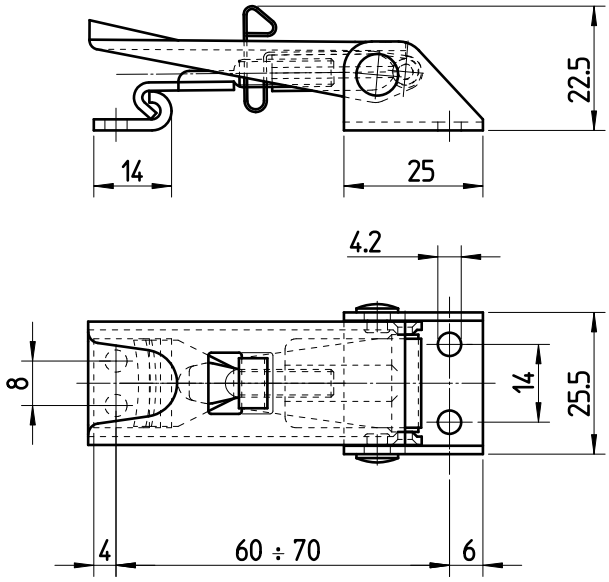

Code DC01 white galvanized	Code AISI304	Product	Max working load (DaN) *	Max tension load (DaN) *	Package (pcs)
CS365AM501001	**CS366AM600000**	Latch + Striker plate	100	140	100
CS36500000001	**CS36600000000**	Latch	100	140	200
CS005AM000001	**CS006AM000000**	Striker plate	-	-	100

MATERIAL - SURFACE TREATMENT
DC01 (Steel) white galvanized

NOTES
* 1 DaN (decanewton) = 1.02 Kgf (kilogram-force).

ACCESSORIES
The recommended standard striker plate is the one in the table below, but other available types are shown on the specific page.

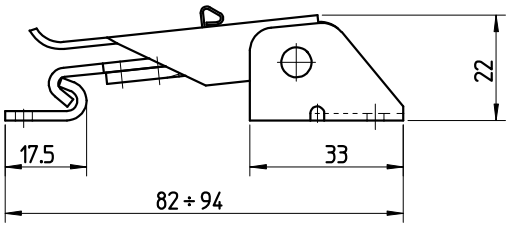

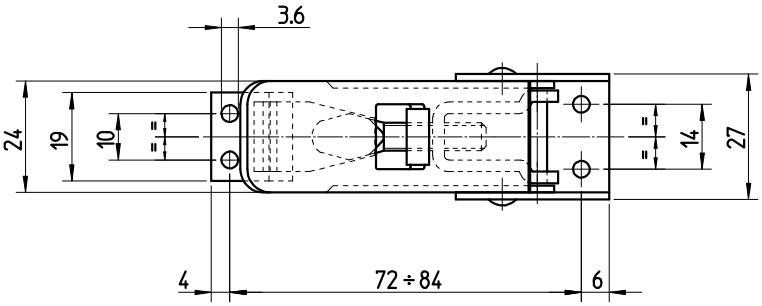

Code DC01 white galvanized	Product	Max working load (DaN) *	Max tension load (DaN) *	Package (pcs)
CS315AK501001	Latch + Striker plate	100	200	50
CS31500000001	Latch	100	200	200
CS005AK000001	Striker plate	-	-	50

MATERIAL - SURFACE TREATMENT
DC01 (Steel) white galvanized
DC01 (Steel) nickel-plated
AISI304 (Stainless steel)

NOTES
In the steel version, the holes on the recommended striker plate are countersunk.
* 1 DaN (decanewton) = 1.02 Kgf (kilogram-force).

ACCESSORIES
The recommended standard striker plate is the one in the table below, but other available types are shown on the specific page.

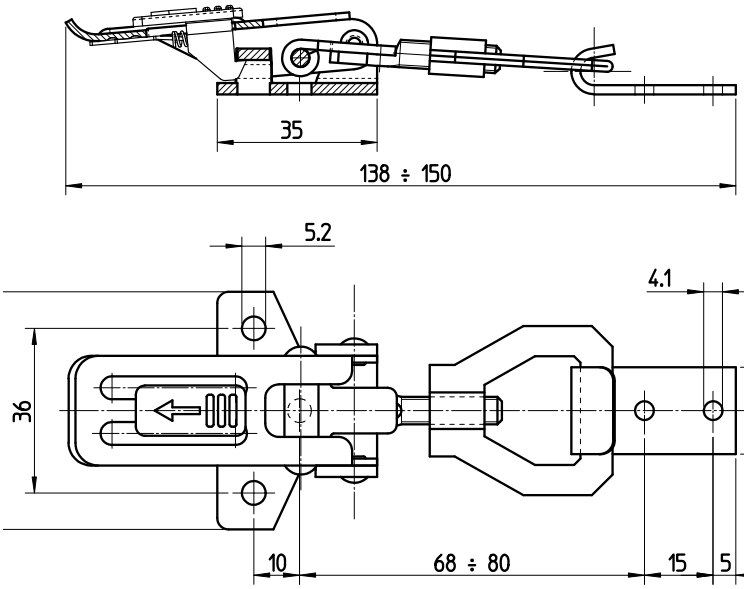

Code DC01 white galvanized	Code DC01 nickel-plated	Code AISI304	Product	Max working load (DaN) *	Max tension load (DaN) *	Package (pcs)
-	**CS185AI508008**	**CS186AI600000**	Latch + Striker plate	110	250	25
-	**CS18500000008**	**CS18600000000**	Latch	110	250	200
CS005AI000001	**CS005AI000008**	**CS006AI000000**	Striker plate	-	-	25

MATERIAL - SURFACE TREATMENT
DC01 (Steel) white galvanized
AISI304 (Stainless steel)

NOTES
* 1 DaN (decanewton) = 1.02 Kgf (kilogram-force).

ACCESSORIES
The recommended standard striker plate is the one in the table below, but other available types are shown on the specific page.

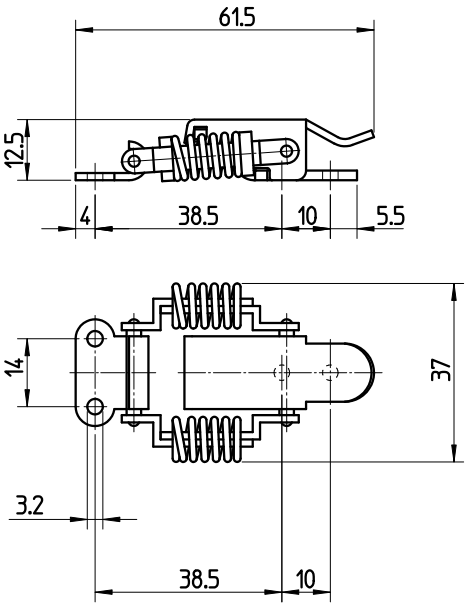

Code DC01 white galvanized	Code AISI304	Product	Max working load (DaN) *	Max tension load (DaN) *	Package (pcs)
CS375AN501001	**CS376AN600000**	Latch + Striker plate	50	150	100
CS37500000001	**CS37600000000**	Latch	50	150	500
CS005AN000001	**CS006AN000000**	Striker plate	-	-	100

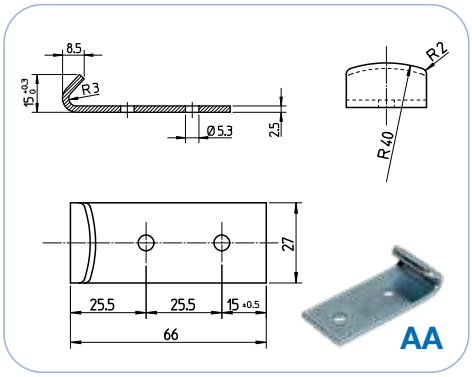

AA

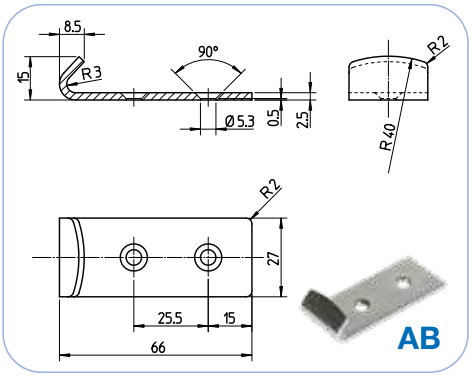

AB

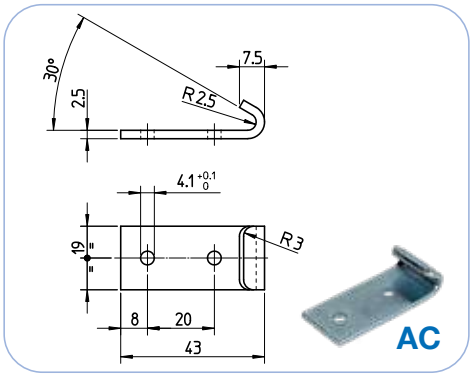

AC

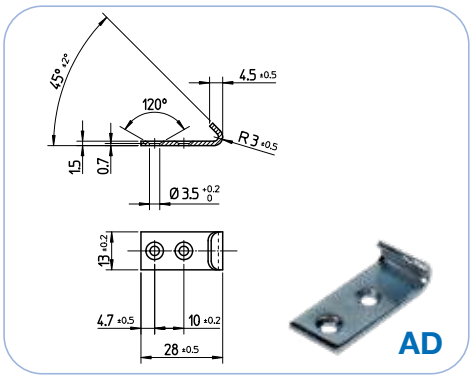

AD

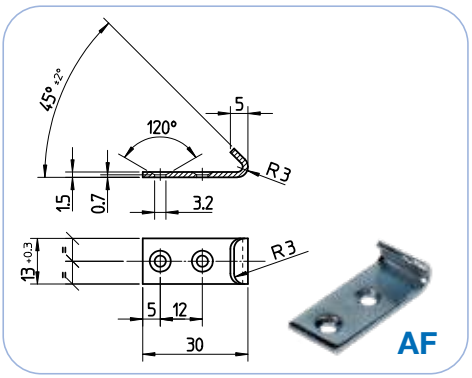

AF

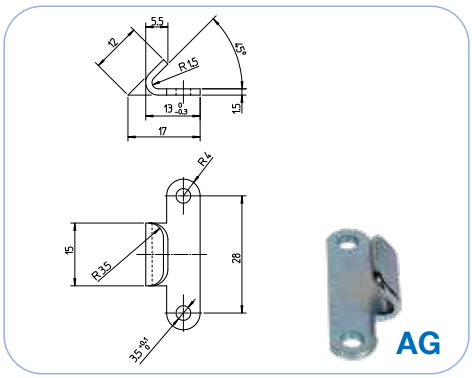

AG

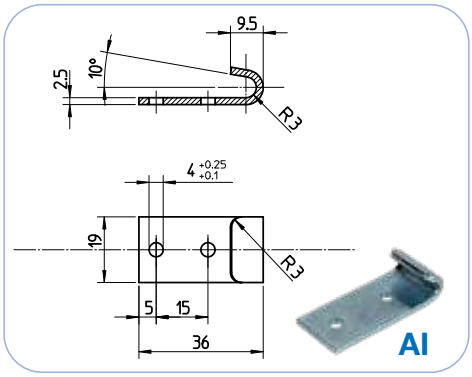

AI

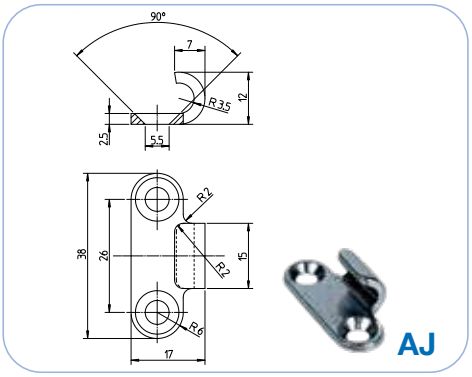

AJ

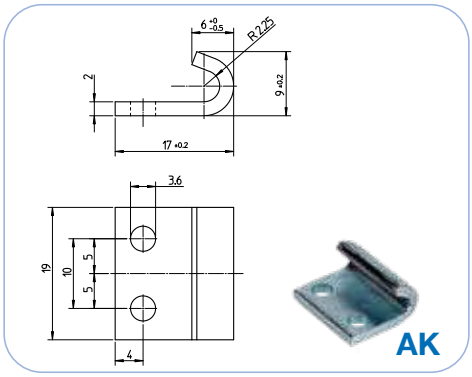

AK

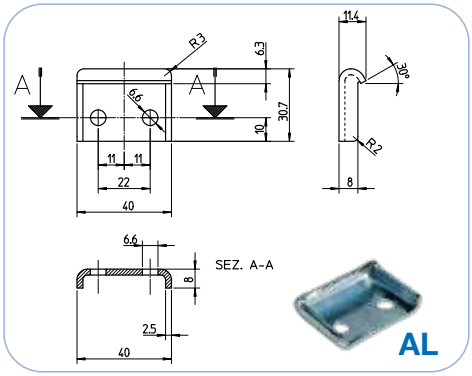

AL

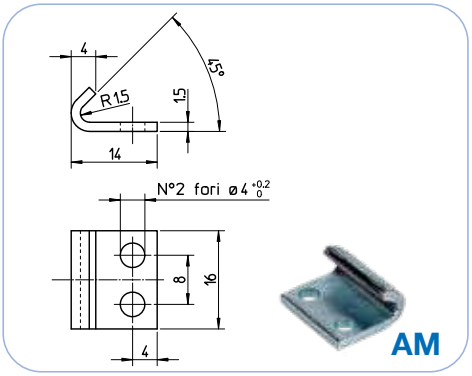

AM

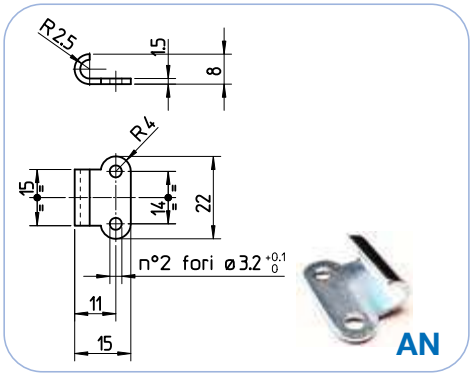

AN

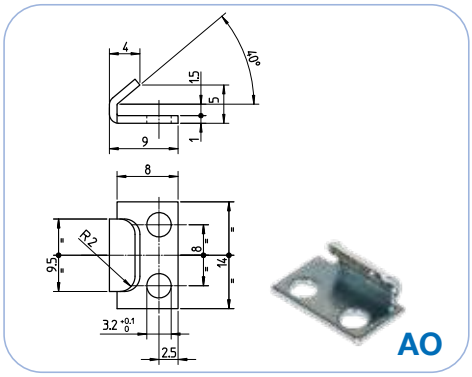

AO

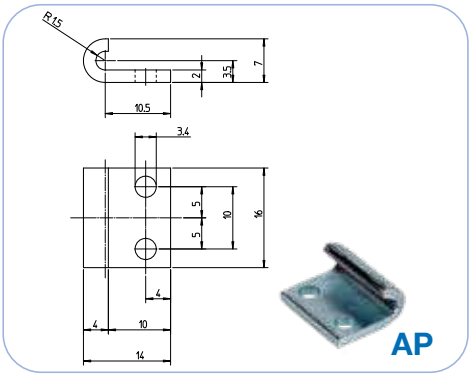

AP

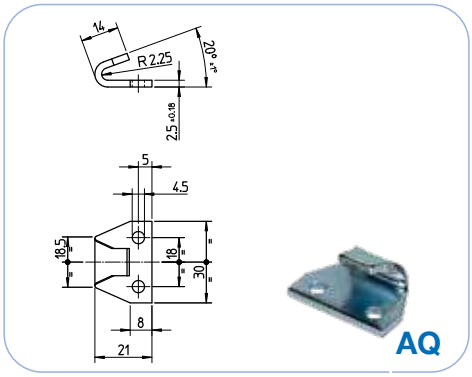

AQ

MATERIAL - SURFACE TREATMENT
DC01 (Steel)
DC01 (Steel) white galvanized
DC01 (Steel) nickel-plated
AISI304 (Stainless steel)

Code DC01	Code DC01 white galvanized	Code DC01 nickel-plated	Code AISI304	Product	Package (pcs)
-	-	-	**CS006AA000000**	AA	25
CS005AB000000	**CS005AB000001**	**CS005AB000008**	-	AB	25
CS005AC000000	**CS005AC000001**	**CS005AC000008**	**CS006AC000000**	AC	50
CS005AD000000	**CS005AD000001**	**CS005AD000008**	**CS006AD000000**	AD	200
CS005AF000000	-	-	-	AF	500
-	**CS005AF000001**	**CS005AF000008**	**CS006AF000000**	AF	150
CS005AG000000	**CS005AG000001**	**CS005AG000008**	**CS006AG000000**	AG	200
CS005AI000000	-	-	-	AI	200
-	**CS005AI000001**	**CS005AI000008**	**CS006AI000000**	AI	25
-	**CS005AJ000001**	-	**CS006AJ000000**	AJ	25
-	**CS005AK000001**	**CS005AK000008**	-	AK	50
-	**CS005AL000001**	-	-	AL	25
-	**CS005AM000001**	-	**CS006AM000000**	AM	100
-	**CS005AN000001**	-	**CS006AN000000**	AN	100
-	**CS005AO000001**	-	-	AO	200
-	**CS005AP000001**	-	-	AP	100
-	**CS005AQ000001**	-	-	AQ	50

15

MAGNETS

Cylinder magnets
page 15.1

Plate magnets
page 15.7

Ring magnets
page 15.11

POT magnets
page 15.14

MATERIAL
Nd (Neodymium)

SURFACE TREATMENT
Nickel-plated

NOTES
The magnets are packaged with/without separator based on type.
* Data purely indicative since each method/instrument/environment is determined for the purpose of the laboratory test result.

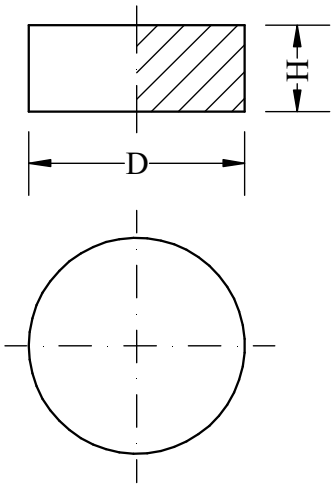

Code	D	H	Magnetization	Degree	Max operating temperature	Pole marked	Attractive force (Kg) *	Package (pcs)
MG01N00300108	3	2	Axial	35	80	No	0,1	1
MG01N00300208	3	3	Axial	35	80	No	0,2	1
MG01N00400108	4	2	Axial	35	80	No	0,25	1
MG01N00400208	4	3	Axial	35	80	No	0,3	1
MG01N00500208	5	2	Axial	35	80	No	0,35	1
MG01N00500408	5	3	Axial	35	80	No	0,45	1
MG01N00500508	5	4	Axial	35	80	No	0,6	1
MG01N00500608	5	5	Axial	35	80	No	0,65	1
MG01N00500108	5	10	Axial	35	80	No	0,65	1
MG01N00500308	5	20	Axial	35	80	No	0,75	1
MG01N00600208	6	2	Axial	35	80	No	0,45	1
MG01N00600508	6	3	Axial	35	80	No	0,55	1
MG01N00600608	6	4	Axial	35	80	No	0,75	1
MG01N00600708	6	5	Axial	35	80	No	0,85	1
MG01N00600808	6	6	Axial	35	80	No	0,95	1
MG01N00600108	6	10	Axial	35	80	No	1	1
MG01N00600308	6	20	Axial	35	80	No	1,15	1
MG01N00600408	6	24,5	Axial	35	80	No	1,2	1
MG01N00800208	8	2	Axial	35	80	No	0,55	1
MG01N00800408	8	3	Axial	35	80	No	1	1
MG01N00800508	8	4	Axial	35	80	No	1,2	1
MG01N00800608	8	5	Axial	35	80	No	1,3	1
MG01N00800708	8	8	Axial	35	80	No	1,5	1
MG01N00800108	8	10	Axial	35	80	No	1,9	1
MG01N00800308	8	25	Axial	35	80	No	2	1
MG01N00900108	9	2	Axial	35	80	No	0,7	1
MG01N00900208	9	3	Axial	35	80	No	1,2	1
MG01N00950108	9,5	1,5	Axial	35	80	No	0,6	1
MG01N01000308	10	2	Axial	35	80	No	0,7	1
MG01N01000408	10	3	Axial	35	80	No	1,4	1

MATERIAL
Nd (Neodymium)

SURFACE TREATMENT
Nickel-plated

NOTES
The magnets are packaged with/without separator based on type.
* Data purely indicative since each method/instrument/environment is determined for the purpose of the laboratory test result.

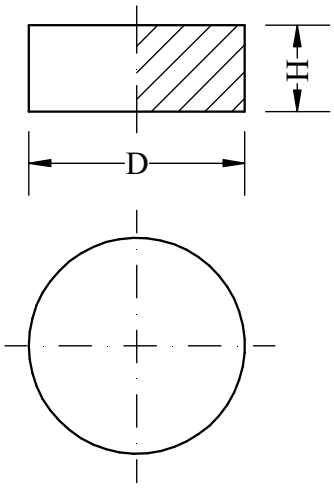

Code	D	H	Magnetization	Degree	Max operating temperature	Pole marked	Attractive force (Kg) *	Package (pcs)
MG01N01000508	10	4	Axial	35	80	No	1,7	1
MG01N01000608	10	5	Axial	35	80	No	2	1
MG01N01000108	10	10	Axial	35	80	No	2,8	1
MG01N01000208	10	12	Axial	35	80	No	3	1
MG01N01200108	12	2	Axial	35	80	No	1	1
MG01N01200208	12	3	Axial	35	80	No	1,7	1
MG01N01200308	12	4	Axial	35	80	No	2,2	1
MG01N01200408	12	5	Axial	35	80	No	2,7	1
MG01N01300108	13	10	Axial	35	80	No	4,5	1
MG01N01500208	15	2	Axial	35	80	No	1,4	1
MG01N01500308	15	2,5	Axial	35	80	No	1,8	1
MG01N01500408	15	3	Axial	35	80	No	2,2	1
MG01N01500508	15	5	Axial	35	80	No	3,2	1
MG01N01500108	15	10	Axial	50	80	No	6	1
MG01N01800108	18	2	Axial	35	80	No	1,8	1
MG01N01800208	18	3	Axial	35	80	No	2,8	1
MG01N01800308	18	5	Axial	35	80	No	5	1
MG01N02000108	20	2	Axial	35	80	No	2	1
MG01N02000208	20	3	Axial	35	80	No	3	1
MG01N02000308	20	5	Axial	35	80	No	5,5	1
MG01N02200208	22	3	Axial	35	80	No	3,4	1
MG01N02200108	22	10	Axial	35	80	No	10	1
MG01N02500108	25	10	Axial	35	80	No	12	1
MG01N02800108	28	10	Axial	35	80	No	14	1
MG01N04000108	40	10	Axial	35	80	No	20	1
MG01N05000108	50	10	Axial	35	80	No	25	1

MATERIAL
FRT (Ferrite)

NOTES
The magnets are packaged with/without separator based on type.
* Data purely indicative since each method/instrument/ environment is determined for the purpose of the laboratory test result.

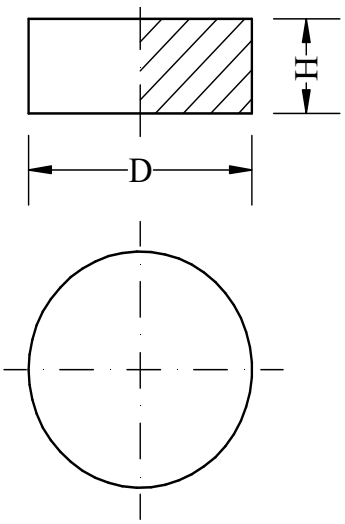

Code	D	H	Magnetization	Degree	Max operating temperature (°C)	Pole marked	Attractive force (Kg) *	Package (pcs)
MG01F02000100	20	3	Axial	30	300	No	0,1	1
MG01F02000200	20	5	Axial	30	300	No	0,4	1
MG01F02800200	28	3	Axial	30	300	No	0,3	1
MG01F02800300	28	5	Axial	30	300	No	0,5	1
MG01F02800100	28	10	Axial	30	300	No	1,2	1

MATERIAL
ALN (Alnico)

NOTES
The magnets are packaged with/without separator based on type.
* Data purely indicative since each method/instrument/ environment is determined for the purpose of the laboratory test result.

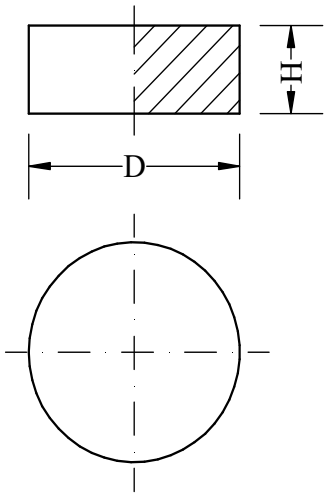

Code	D	H	Magnetization	Degree	Max operating temperature (°C)	Pole marked	Attractive force (Kg) *	Package (pcs)
MG01A00500100	5	20	Axial	LNG40	525	No	-	1
MG01A00500200	5	25	Axial	LNG40	525	No	-	1
MG01A00600100	6	20	Axial	LNG40	525	No	-	1
MG01A00600200	6	25	Axial	LNG40	525	No	-	1
MG01A00800100	8	10	Axial	LNG40	525	No	-	1
MG01A00800200	8	25	Axial	LNG40	525	No	-	1
MG01A00800300	8	40	Axial	LNG40	525	No	-	1

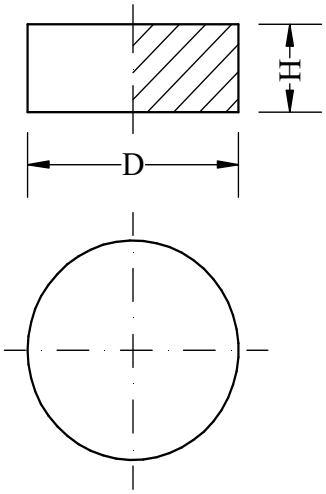

MATERIAL
SmCo (Samario cobalt)

NOTES
The magnets are packaged with/without separator based on type.
* Data purely indicative since each method/instrument/environment is determined for the purpose of the laboratory test result.

Code	D	H	Magnetization	Degree	Max operating temperature	Pole marked	Attractive force (Kg) *	Package (pcs)
MG01S00200100	2	2	Axial	2 / 17 - 30	300	No	0,1	1
MG01S00300100	3	2	Axial	2 / 17 - 30	300	No	0,15	1
MG01S00300200	3	3	Axial	2 / 17 - 30	300	No	0,18	1
MG01S00400100	4	2	Axial	2 / 17 - 30	300	No	0,2	1
MG01S00400200	4	3	Axial	2 / 17 - 30	300	No	0,4	1
MG01S00400300	4	5	Axial	2 / 17 - 30	300	No	0,6	1
MG01S00500200	5	2	Axial	2 / 17 - 30	300	No	0,3	1
MG01S00500300	5	3	Axial	2 / 17 - 30	300	No	0,4	1
MG01S00500400	5	5	Axial	2 / 17 - 30	300	No	0,65	1
MG01S00500500	5	8	Axial	2 / 17 - 30	300	No	0,75	1
MG01S00500100	5	10	Axial	2 / 17 - 30	300	No	1,6	1
MG01S00600200	6	2	Axial	2 / 17 - 30	300	No	0,4	1
MG01S00600300	6	3	Axial	2 / 17 - 30	300	No	0,6	1
MG01S00600400	6	5	Axial	2 / 17 - 30	300	No	0,8	1
MG01S00600500	6	6	Axial	2 / 17 - 30	300	No	1	1
MG01S00600600	6	8	Axial	2 / 17 - 30	300	No	1,2	1
MG01S00600100	6	10	Axial	2 / 17 - 30	300	No	1,2	1
MG01S00800200	8	2	Axial	2 / 17 - 30	300	No	0,55	1
MG01S00800300	8	3	Axial	2 / 17 - 30	300	No	0,8	1
MG01S00800400	8	5	Axial	2 / 17 - 30	300	No	1	1
MG01S00800500	8	6	Axial	2 / 17 - 30	300	No	1,5	1
MG01S00800600	8	8	Axial	2 / 17 - 30	300	No	1,8	1
MG01S00800100	8	10	Axial	2 / 17 - 30	300	No	2	1
MG01S00900100	9	2	Axial	2 / 17 - 30	300	No	0,6	1
MG01S00900200	9	3	Axial	2 / 17 - 30	300	No	0,9	1
MG01S01000200	10	2	Axial	2 / 17 - 30	300	No	0,6	1
MG01S01000300	10	3	Axial	2 / 17 - 30	300	No	1	1
MG01S01000400	10	4	Axial	2 / 17 - 30	300	No	1,2	1
MG01S01000500	10	5	Axial	2 / 17 - 30	300	No	1,7	1
MG01S01000600	10	6	Axial	2 / 17 - 30	300	No	2	1
MG01S01000100	10	10	Axial	2 / 17 - 30	300	No	2,5	1
MG01S01200100	12	2	Axial	2 / 17 - 30	300	No	0,8	1
MG01S01200200	12	3	Axial	2 / 17 - 30	300	No	1,2	1
MG01S01200300	12	5	Axial	2 / 17 - 30	300	No	2,2	1
MG01S01500100	15	2	Axial	2 / 17 - 30	300	No	1	1
MG01S01500200	15	3	Axial	2 / 17 - 30	300	No	1,5	1
MG01S01500300	15	5	Axial	2 / 17 - 30	300	No	2,5	1
MG01S01800100	18	5	Axial	2 / 17 - 30	300	No	3	1
MG01S02000200	20	5	Axial	2 / 17 - 30	300	No	3,5	1
MG01S02000100	20	10	Axial	2 / 17 - 30	300	No	7	1

MATERIAL
GMFRT (Ferrite rubber)

NOTES
The magnets are packaged with/without separator based on type.
* Data purely indicative since each method/instrument/ environment is determined for the purpose of the laboratory test result.

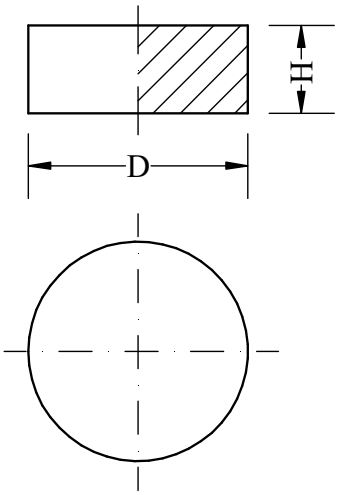

Code	D	H	Magnetization	Degree	Max operating temperature (°C)	Pole marked	Attractive force (Kg) *	Package (pcs)
MG01H01000100	10	3	Axial	5	80	No	-	1
MG01H02000100	20	4	Axial	5	80	No	-	1

MATERIAL
Nd (Neodymium)

SURFACE TREATMENT
Nickel-plated

NOTES
The magnets are packaged with/without separator based on type.
* Data purely indicative since each method/instrument/environment is determined for the purpose of the laboratory test result.

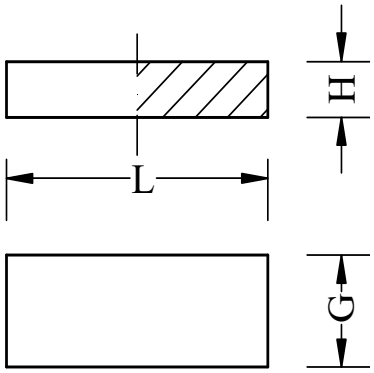

Code	G	L	H	Magnetization	Degree	Max operating temperature	Pole marked	Attractive force (Kg) *	Package (pcs)
MG02N00500108	5	10	2	Axial	35	80	No	0,55	1
MG02N00500208	5	10	3	Axial	35	80	No	0,95	1
MG02N00500308	5	25	3	Axial	35	80	No	2	1
MG02N01000108	10	10	2	Axial	35	80	No	1	1
MG02N01000208	10	10	3	Axial	35	80	No	1,5	1
MG02N01000308	10	10	5	Axial	35	80	No	2,5	1
MG02N01000408	10	20	2	Axial	35	80	No	1,5	1
MG02N01000508	10	20	3	Axial	35	80	No	2,5	1
MG02N01000608	10	20	5	Axial	35	80	No	4	1
MG02N01500108	15	30	5	Axial	35	80	No	6,5	1
MG02N01500208	15	50	10	Axial	35	80	No	15	1
MG02N01800108	18	18	5	Axial	30SH	150	Nord	5,5	1
MG02N02000208	20	20	5	Axial	35	80	No	6	1
MG02N02000108	20	20	10	Axial	35	80	No	11	1
MG02N02000408	20	40	5	Axial	35	80	No	8,5	1
MG02N02000308	20	40	10	Axial	35	80	No	16,5	1
MG02N02500108	25	50	10	Axial	35	80	No	28	1
MG02N02500208	25	50	20	Axial	35	80	No	35	1
MG02N05000108	50	50	10	Axial	35	80	No	28	1
MG02N05000208	50	50	15	Axial	35	80	No	45	1
MG02N05000308	50	50	20	Axial	35	80	No	60	1
MG02N05000408	50	50	25	Axial	35	80	No	80	1

MATERIAL
FRT (Ferrite)

NOTES
The magnets are packaged with/without separator based on type.
* Data purely indicative since each method/instrument/ environment is determined for the purpose of the laboratory test result.

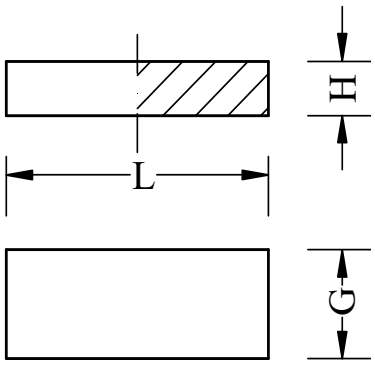

Code	G	L	H	Magnetization	Degree	Max operating temperature (°C)	Pole marked	Attractive force (Kg) *	Package (pcs)
MG02F01000100	10	20	5	Axial	35H	300	No	4	1
MG02F01600100	16	75	10	Axial	30BH	300	No	1,8	1
MG02F03400100	34	90	20	Axial	30BH	300	No	6	1
MG02F10000100	100	150	15	Axial	30BH	300	No	8	1
MG02F10000200	100	150	25,4	Axial	30BH	300	No	15	1

MATERIAL
SmCo (Samario cobalt)

NOTES
The magnets are packaged with/without separator based on type.
* Data purely indicative since each method/instrument/ environment is determined for the purpose of the laboratory test result.

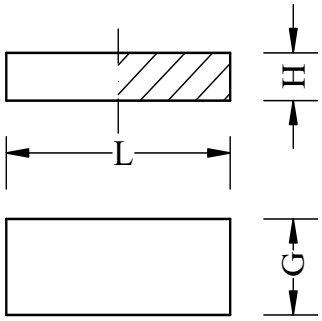

Code	G	L	H	Magnetization	Degree	Max operating temperature (°C)	Pole marked	Attractive force (Kg) *	Package (pcs)
MG02S00500100	5	10	2	Axial	2 / 17 - 30	300	No	0,5	1
MG02S00500200	5	20	2	Axial	2 / 17 - 30	300	No	0,7	1
MG02S00500300	5	20	3	Axial	2 / 17 - 30	300	No	1,2	1
MG02S01000100	10	10	2	Axial	2 / 17 - 30	300	No	0,8	1
MG02S01000200	10	20	3	Axial	2 / 17 - 30	300	No	1,7	1
MG02S01000300	10	20	5	Axial	2 / 17 - 30	300	No	3	1
MG02S02000100	20	20	3	Axial	2 / 17 - 30	300	No	2,5	1
MG02S02000200	20	20	5	Axial	2 / 17 - 30	300	No	4	1

MATERIAL
GMFRT (Ferrite rubber)

NOTES
The magnets are packaged with/without separator based on type.
* Data purely indicative since each method/instrument/ environment is determined for the purpose of the laboratory test result.

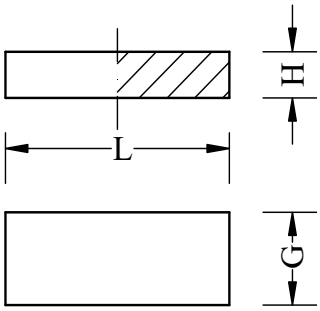

Code	G	L	H	Magnetization	Degree	Temperatura lavoro max (°C)	Polo contrassegnato	Attractive force (Kg) *	Package (pcs)
MG02H01500600	15	75	6	Axial	5	80	North	-	1
MG02H01500700	15	75	6	Axial	5	80	South	-	1
MG02H01500100	15	150	6	Axial	5	80	South	-	1
MG02H01500300	15	200	6	Axial	5	80	North	-	1
MG02H01500400	15	300	6	Axial	5	80	North	-	1
MG02H01500500	15	300	6	Axial	5	80	South	-	1
MG02H01500200	15	1.500	6	Axial	5	80	North	-	1

MATERIAL
Nd (Neodymium)

SURFACE TREATMENT
Nickel-plated

NOTES
The magnets are packaged with/without separator based on type.
* Data purely indicative since each method/instrument/environment is determined for the purpose of the laboratory test result.

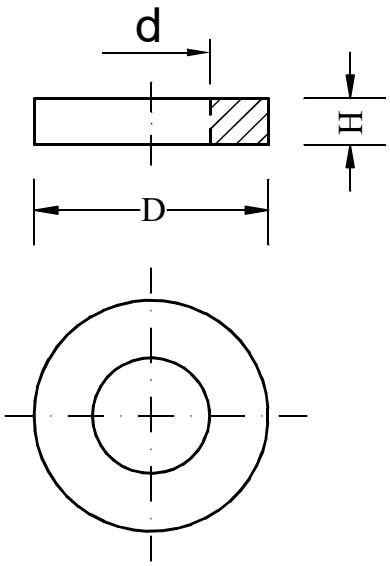

Code	D	d	H	Magnetization	Degree	Max operating temperature	Pole marked	Attractive force (Kg) *	Package (pcs)
MG03N00500108	5	2	10	Axial	35	80	No	0,5	1
MG03N01000108	10	5	2	Axial	35	80	No	0,7	1
MG03N01500208	15	9	2,5	Axial	35	80	No	1,3	1
MG03N01500108	15	10	2	Axial	35	80	No	1	1
MG03N01550108	15,5	7	2	Axial	35	80	No	1,3	1
MG03N02000108	20	10	2	Axial	35	80	No	1,7	1
MG03N02000208	20	10	3	Axial	35	80	No	2,7	1
MG03N02500108	25	10	5	Axial	35	80	No	7	1
MG03N03000108	30	15	3	Axial	35	80	No	4	1
MG03N03000208	30	15	5	Axial	35	80	No	7,5	1
MG03N04000208	40	20	5	Axial	35	80	No	8	1
MG03N04000108	40	20	10	Axial	35	80	No	16	1
MG03N05000308	50	25	10	Axial	35	80	No	20	1

MATERIAL
SmCo (Samario cobalt)

NOTES
The magnets are packaged with/without separator based on type.
* Data purely indicative since each method/instrument/ environment is determined for the purpose of the laboratory test result.

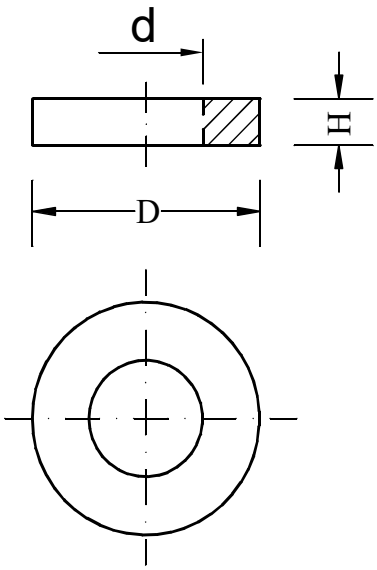

Code	D	d	H	Magnetization	Degree	Max operating temperature (°C)	Pole marked	Attractive force (Kg) *	Package (pcs)
MG03S01000100	10	5	2	Axial	2 / 17 - 30	300	No	0,3	1
MG03S02000100	20	10	2	Axial	2 / 17 - 30	300	No	1	1
MG03S02000200	20	10	5	Axial	2 / 17 - 30	300	No	1,8	1

MATERIAL
Nd (Neodymium)

SURFACE TREATMENT
Nickel-plated

NOTES
The magnets are packaged with/without separator based on type.
* Data purely indicative since each method/instrument/environment is determined for the purpose of the laboratory test result.

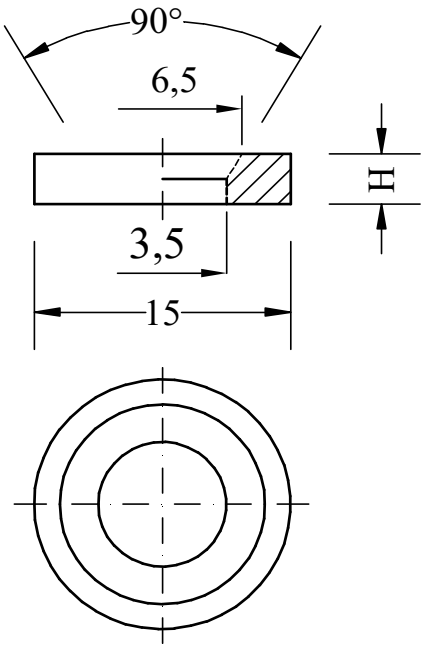

Code	D	d	V	H	A	Magnetization	Degree	Temperatura lavoro max (°C)	Pole countersinking	Pole marked	Attractive force (Kg) *	Package (pcs)
MG04N01500108	15	3,5	6,5	10	90°	Axial	35	80	North	No	5,5	1
MG04N01500208	15	3,5	6,5	10	90°	Axial	35	80	South	No	5,5	1
MG04N01500308	15	3,5	6,5	5	90°	Axial	35	80	North	No	3,5	1
MG04N01500408	15	3,5	6,5	5	90°	Axial	35	80	South	No	3,5	1

MATERIAL - SURFACE TREATMENT
Magnet: Nd (Neodymium) nickel-plated
Body: AC (Steel) galvanized white
Coating: GM (Rubber) black

NOTES
The magnets are packaged with/without separator based on type.
* Data purely indicative since each method/instrument/environment is determined for the purpose of the laboratory test result.

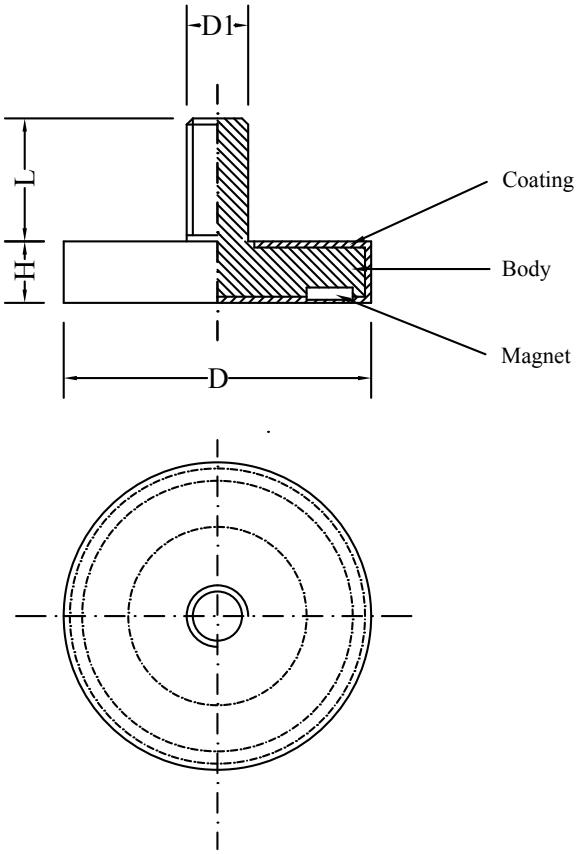

Code	D	H	D1	L	Magnetization	Degree	Attractive force (Kg) *	Package (pcs)
MG06N06600100	66	8,5	M8	15	Axial	45	18	1
MG06N08800100	88	8,5	M8	15	Axial	45	42	1

MATERIAL - SURFACE TREATMENT

Magnet: Nd (Neodymium) nickel-plated
Body: AC (Steel) galvanized white
Coating: GM (Rubber) black

NOTES

The magnets are packaged with/without separator based on type.
* Data purely indicative since each method/instrument/environment is determined for the purpose of the laboratory test result.

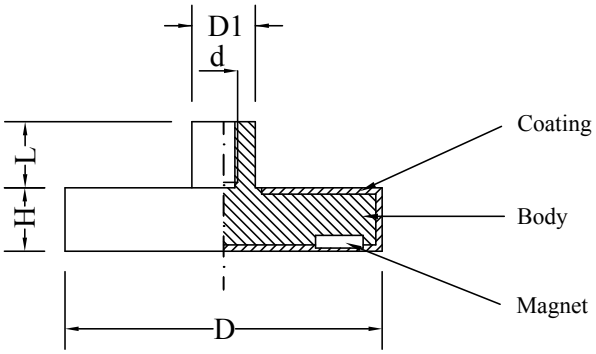

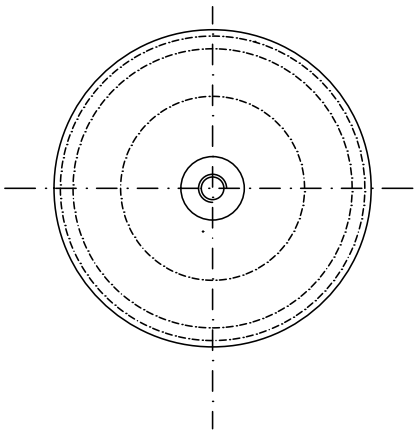

Code	D	H	d	L	D1	Magnetization	Degree	Attractive force (Kg) *	Package (pcs)
MG07N04600100	46	6	M4	4,5	8	Axial	45	8,5	1
MG07N06600100	66	8,5	M5	6,5	10	Axial	45	18	1
MG07N08800100	88	8,5	M8	8,5	12	Axial	42	42	1

MATERIAL - SURFACE TREATMENT
Magnet: Nd (Neodymium) nickel-plated
Body: AC (Steel) galvanized white
Coating: GM (Rubber) black

NOTES
The magnets are packaged with/without separator based on type.
* Data purely indicative since each method/instrument/environment is determined for the purpose of the laboratory test result.

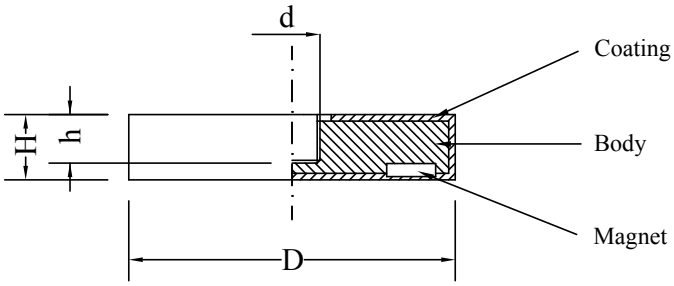

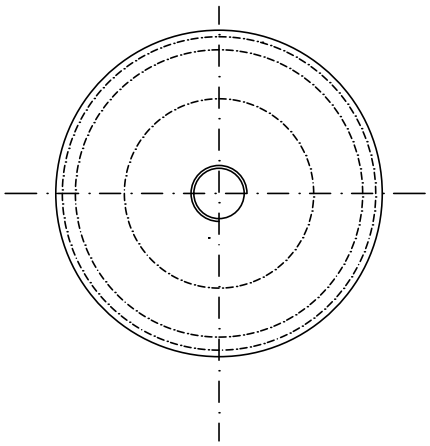

Code	D	H	d	h	Magnetization	Degree	Attractive force (Kg) *	Package (pcs)
MG05N02200100	22	6	M4	4	Axial	45	5	1
MG05N04300100	43	6	M4	4	Axial	35	8	1
MG05N06600100	66	8,5	M5	6,5	Axial	38	18	1
MG05N08800100	88	8,5	M8	6,5	Axial	42	42	1

MATERIAL - SURFACE TREATMENT
Magnet: Nd (Neodymium) nickel-plated
Body: OT (Brass)
Expander: AC (Steel)

NOTES
The magnets are packaged with/without separator based on type.
* Data purely indicative since each method/instrument/ environment is determined for the purpose of the laboratory test result.

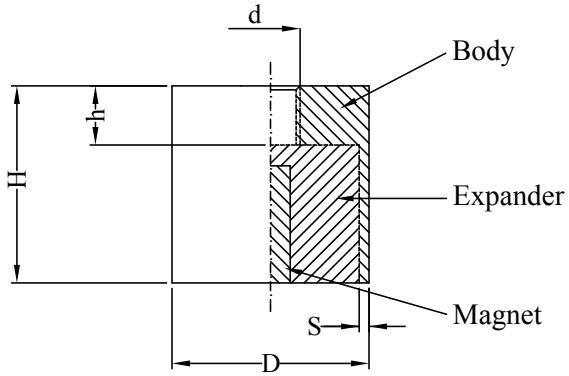

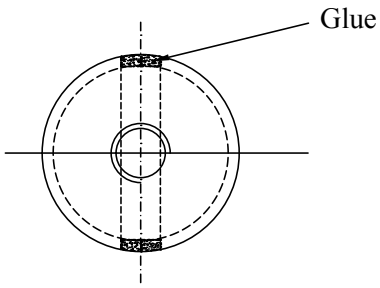

Code	D	H	d	h	S	Magnetization	Degree	Attractive force (Kg) *	Package (pcs)
MG08N01000100	10	10	M3	3	1	Axial	52	5	1
MG08N01500100	15	15	M3	3	1,5	Axial	52	14	1
MG08N02000100	20	20	M4	4	2	Axial	52	26	1

MATERIAL - SURFACE TREATMENT
Magnet: FRT (Ferrite)
Body: OT (Brass)
Expander: AC (Steel)

NOTES
The magnets are packaged with/without separator based on type.
* Data purely indicative since each method/instrument/environment is determined for the purpose of the laboratory test result.

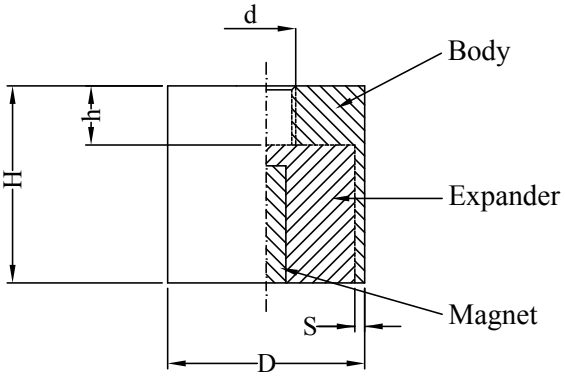

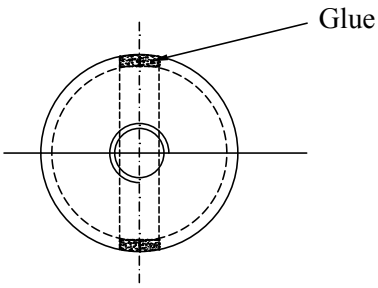

Code	D	H	d	h	S	Magnetization	Degree	Attractive force (Kg) *	Package (pcs)
MG08F01000100	10	10	M3	3	1	Axial	44H	1	1
MG08F01500100	15	15	M3	3	1,5	Axial	44H	4,5	1
MG08F02000100	20	20	M4	4	2	Axial	44H	7,5	1

MATERIAL - SURFACE TREATMENT
Magnet: SmCo (Samario cobalt)
Body: OT (Brass)
Expander: AC (Steel)

NOTES
The magnets are packaged with/without separator based on type.
* Data purely indicative since each method/instrument/ environment is determined for the purpose of the laboratory test result.

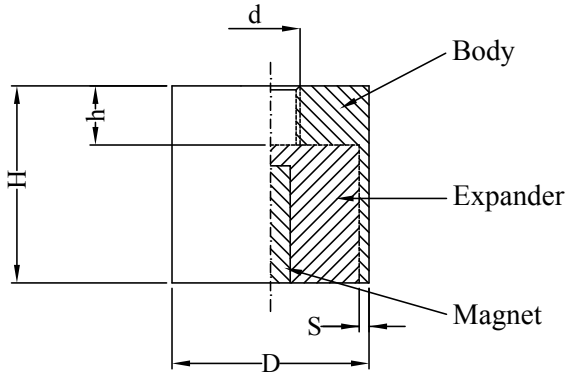

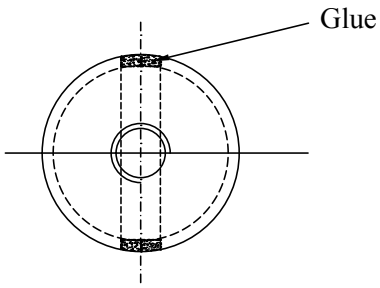

Code	D	H	d	h	S	Magnetization	Degree	Attractive force (Kg) *	Package (pcs)
MG08S01000100	10	10	M3	3	1	Axial	2 / 17 - 30	2	1
MG08S01500100	15	15	M3	3	1,5	Axial	2 / 17 - 30	12	1
MG08S02000100	20	20	M4	4	2	Axial	2 / 17 - 30	14	1

MATERIAL - SURFACE TREATMENT
Magnet: Nd (Neodymium) nickel-plated
Body: AC (Steel) nickel-plated

NOTES
The magnets are packaged with/without separator based on type.
* Data purely indicative since each method/instrument/ environment is determined for the purpose of the laboratory test result.

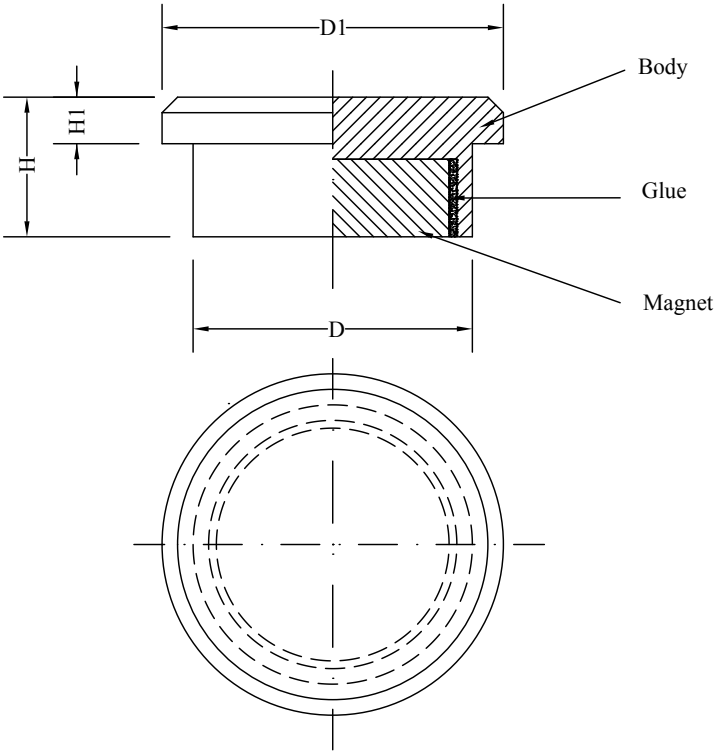

Code	D	H	D1	H1	Magnetization	Degree	Attractive force (Kg) *	Package (pcs)
MG09N01800100	18	9	22	3	Axial	35	7	1

MATERIAL - SURFACE TREATMENT
Magnet: Nd (Neodymium) nickel-plated
Body: AC (Steel) nickel-plated

NOTES
The magnets are packaged with/without separator based on type.
* Data purely indicative since each method/instrument/environment is determined for the purpose of the laboratory test result.

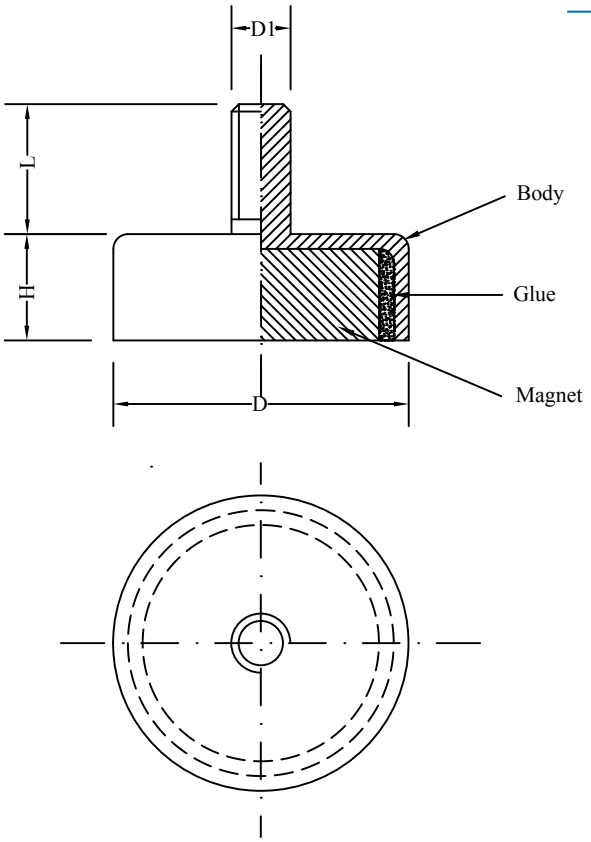

Code	D	H	D1	L	Magnetization	Degree	Attractive force (Kg) *	Package (pcs)
MG10N02000100	20	7,2	M4	8,8	Axial	35	12	1
MG10N02200100	22	6	M5	15	Axial	35	8	1
MG10N03000100	30	6,4	M5	10,4	Axial	35	29	1

MATERIAL - SURFACE TREATMENT
Magnet: FRT (Ferrite)
Body: AC (Steel) galvanized white

NOTES
The magnets are packaged with/without separator based on type.
* Data purely indicative since each method/instrument/ environment is determined for the purpose of the laboratory test result.

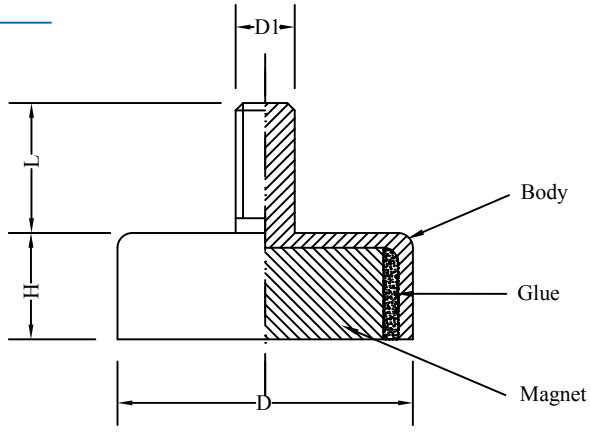

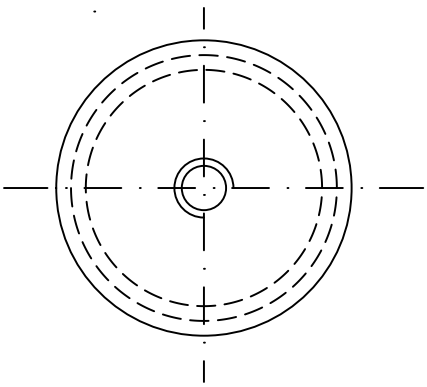

Code	D	H	D1	L	Magnetization	Degree	Attractive force (Kg) *	Package (pcs)
MG10F02000100	20	6	M3	7	Axial	30	3	1
MG10F03200100	32	7	M4	8	Axial	30	8	1

MATERIAL - SURFACE TREATMENT
Magnet: Nd (Neodymium) nickel-plated
Body: AC (Steel) nickel-plated

NOTES
The magnets are packaged with/without separator based on type.
* Data purely indicative since each method/instrument/environment is determined for the purpose of the laboratory test result.

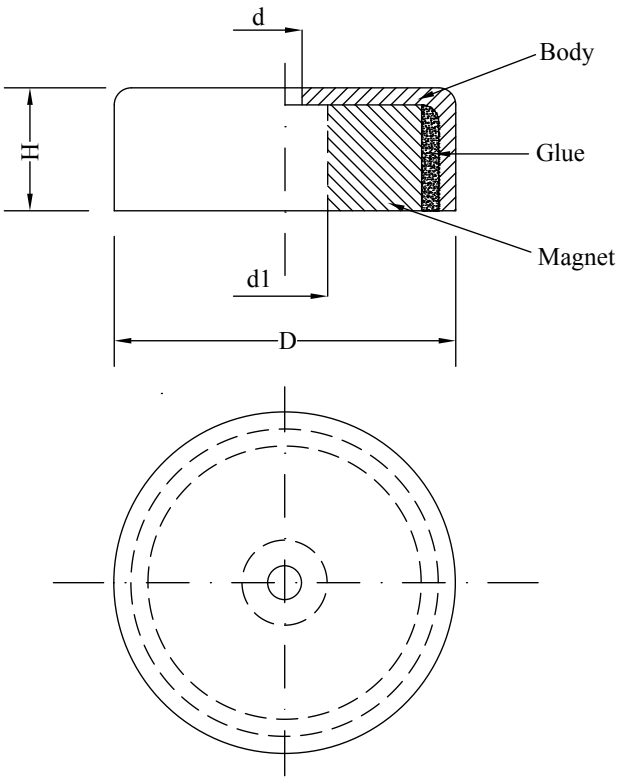

Code	D	H	d	d1	Magnetization	Degree	Attractive force (Kg) *	Package (pcs)
MG11N02000100	20	7,2	4,5	8	Axial	35	8	1
MG11N03000100	30	6,4	5,5	9	Axial	35	27	1

MATERIAL - SURFACE TREATMENT
Magnet: FRT (Ferrite)
Body: AC (Steel) galvanized white

NOTES
The magnets are packaged with/without separator based on type.
* Data purely indicative since each method/instrument/ environment is determined for the purpose of the laboratory test result.

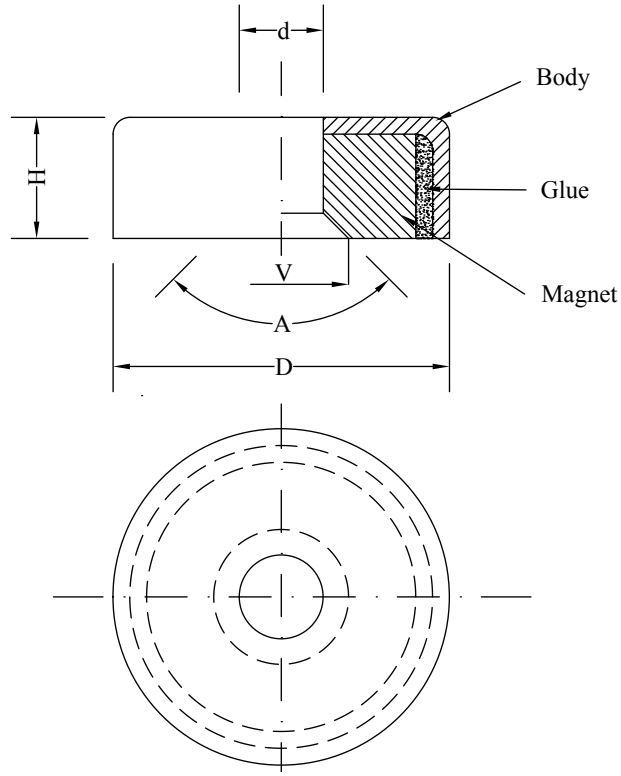

Code	D	H	d	V	A	Magnetization	Degree	Attractive force (Kg) *	Package (pcs)
MG12F02000100	20	6	4,2	9	90°	Axial	30	2,7	1
MG12F03200100	32	7	5,5	10,4	90°	Axial	30	7,3	1

MATERIAL - SURFACE TREATMENT
Magnet: Nd (Neodymium) nickel-plated
Body: AC (Steel) nickel-plated

NOTES
The magnets are packaged with/without separator based on type.
* Data purely indicative since each method/instrument/environment is determined for the purpose of the laboratory test result.

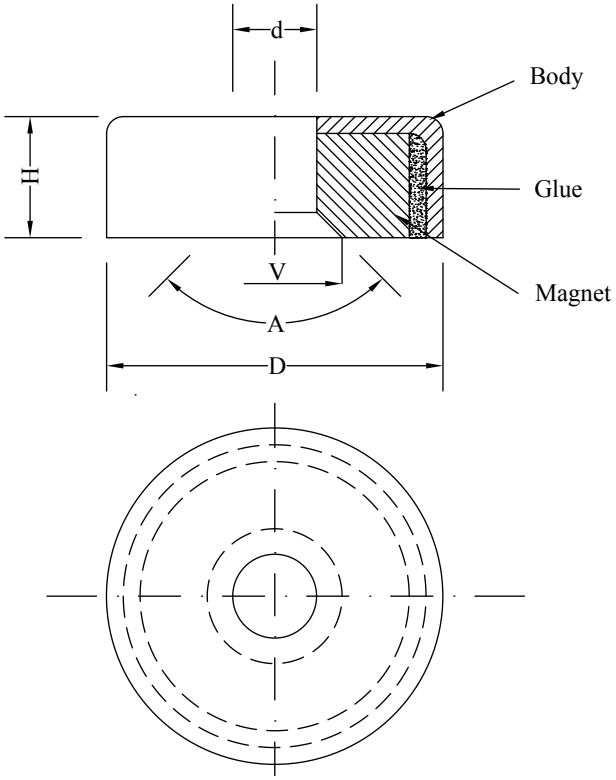

Code	D	H	d	V	A	Magnetization	Degree	Attractive force (Kg) *	Package (pcs)
MG12N02000100	20	7,2	4,5	8,6	90°	Axial	35	10	1
MG12N03000100	30	6,4	5,5	11	90°	Axial	35	29	1
MG12N03200100	32	7	5,5	13	90°	Axial	35	7,5	1

16

POSITIONING AND INDEXING ELEMENTS

Spring plungers
page 16.1

Indexing plungers
page 16.14

Cam action indexing plungers - *page 16.42*

Ball lock pins
page 16.47

Accessories
page 16.61

Steel
MATERIAL - SURFACE TREATMENT
Body: Cl 5.8 (Steel) burnished
Ball: AC (Steel) tempered
Spring: Cl D (Steel for springs)

Stainless steel
MATERIAL - SURFACE TREATMENT
Body: AISI303 (Stainless steel)
Ball: AISI420 (Stainless steel) tempered
Spring: AISI301 (Stainless steel)

NOTES
F = Applicable elastic force between F1 and F2.

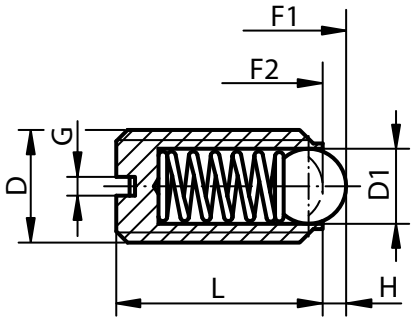

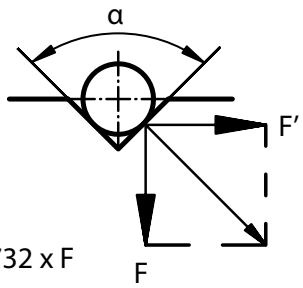

α = 60°, F' = 1,732 x F
α = 90°, F' = F
α = 120°, F' = 0,577 x F

Standard elastic force

Code Cl 5.8	Code AISI303	D	D1	L	H	G	Spring force initial pressure F1 (approx. N)	Spring force final pressure F2 (approx. N)	Pack. Cl 5.8 (pcs)	Pack. AISI303 (pcs)
KP030903	**KP031003**	M3	1,5	7	0,4	0,4	1,5	3	50	10
KP030904	**KP031004**	M4	2,5	9	0,8	0,6	4	10	50	25
KP030905	**KP031005**	M5	3	12	0,9	0,8	6	11	50	25
KP030906	**KP031006**	M6	3,5	14	1	1	9	13	50	25
KP030908	**KP031008**	M8	5	16	1,5	1,2	15	30	50	10
KP030910	**KP031010**	M10	6	19	2	1,6	20	35	50	10
KP030912	**KP031012**	M12	8	22	2,5	2	30	55	25	10
KP030916	**KP031016**	M16	10	24	3,5	2,5	65	125	25	10
KP030920	**KP031020**	M20	12	30	4,5	2,5	80	160	10	5

Enhanced elastic force

Code Cl 5.8	Code AISI303	D	D1	L	H	G	Spring force initial pressure F1 (approx. N)	Spring force final pressure F2 (approx. N)	Pack. Cl 5.8 (pcs)	Pack. AISI303 (pcs)
KP0309203	**KP0310203**	M3	1,5	7	0,4	0,4	5	7	50	10
KP0309204	**KP0310204**	M4	2,5	9	0,8	0,6	12	22	50	10
KP0309205	**KP0310205**	M5	3	12	0,9	0,8	19	30	50	10
KP0309206	**KP0310206**	M6	3,5	14	1	1	28	40	50	10
KP0309208	**KP0310208**	M8	5	16	1,5	1,2	47	73	50	10
KP0309210	**KP0310210**	M10	6	19	2	1,6	66	100	25	10
KP0309212	**KP0310212**	M12	8	22	2,5	2	66	120	25	10
KP0309216	**KP0310216**	M16	10	24	3,5	2,5	90	180	10	10
KP0309220	**KP0310220**	M20	12	30	4,5	2,5	115	240	10	5

Long model, standard elastic force

Code Cl 5.8	Code AISI303	D	D1	L	H	G	Spring force initial pressure F1 (approx. N)	Spring force final pressure F2 (approx. N)	Pack. Cl 5.8 (pcs)	Pack. AISI303 (pcs)
KP0309404	**KP0310404**	M4	2,5	16	0,8	0,6	4	10	10	10
KP0309405	**KP0310405**	M5	3	20	0,9	0,8	6	11	10	10
KP0309406	**KP0310406**	M6	3,5	25	1	1	9	13	10	10
KP0309408	**KP0310408**	M8	5	30	1,5	1,2	15	30	10	10
KP0309410	**KP0310410**	M10	6	35	2	1,6	20	35	5	5
KP0309412	**KP0310412**	M12	8	40	2,5	2	30	55	5	5
KP0309416	**KP0310416**	M16	10	45	3,5	2,5	65	125	5	5

Thermoplastic body, POM ball
MATERIAL - SURFACE TREATMENT
Body: TMP (Thermoplastic) blackish grey
Ball: POM (Acetylene) white
Spring: AISI301 (Stainless steel)

Thermoplastic body, stainless steel ball
MATERIAL - SURFACE TREATMENT
Body: TMP (Thermoplastic) blackish grey
Ball: AISI420 (Stainless steel) tempered
Spring: AISI301 (Stainless steel)

NOTES
F = Applicable elastic force between F1 and F2.

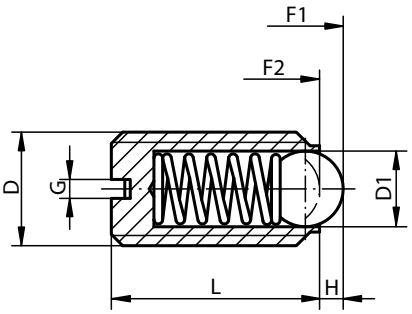

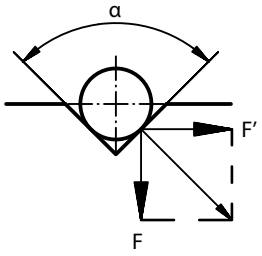

α = 60°, F' = 1,732 x F
α = 90°, F' = F
α = 120°, F' = 0,577 x F

Code POM ball	Code AISI 420 ball	D	D1	L	H	G	Spring force initial pressure F1 (approx. N)	Spring force final pressure F2 (approx. N)	Package (pcs)
KP031106	**KP031206**	M6	3,5	14	1	1	9	13	25
KP031108	**KP031208**	M8	5	16	1,5	1,2	15	30	25
KP031110	**KP031210**	M10	6	19	2	1,6	20	40	25

SLOTTED SPRING PLUNGER - THRUST PIN
steel

Steel
MATERIAL - SURFACE TREATMENT
Body: Cl 5.8 (Steel) burnished
Pin: AC (Steel) tempered
Spring: Cl D (Steel for springs)

Stainless steel
MATERIAL - SURFACE TREATMENT
Body: AISI303 (Stainless steel)
Pin: AISI420 (Stainless steel) tempered
Spring: AISI301 (Stainless steel)

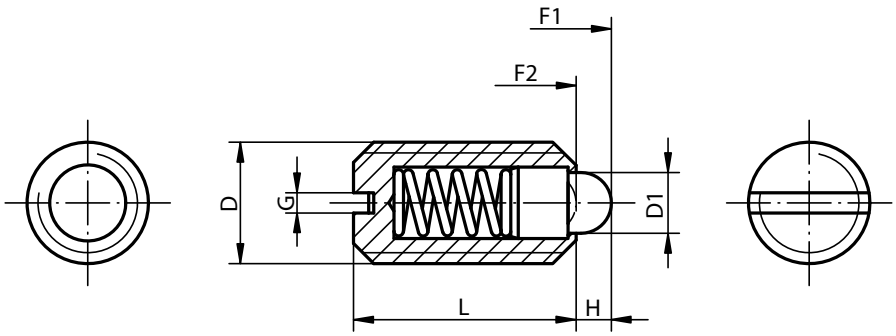

Standard elastic force

Code Cl 5.8	Code AISI303	D	D1	L	H	G	Spring force initial pressure F1 (approx. N)	Spring force final pressure F2 (approx. N)	Pack. Cl 5.8 (pcs)	Pack. AISI303 (pcs)
KP031304	**KP031404**	M4	1,8	9	1,5	0,6	6	20	50	10
KP031305	**KP031405**	M5	2,4	12	2	0,8	6	20	50	10
KP031306	**KP031406**	M6	2,7	14	2	1	7	20	50	10
KP031308	**KP031408**	M8	4	16	2	1,2	15	30	50	10
KP031310	**KP031410**	M10	4,5	19	2,5	1,6	20	35	50	10
KP031312	**KP031412**	M12	6	22	3,5	2	30	55	25	5
KP031316	**KP031416**	M16	8,5	24	4,5	2,5	45	100	10	5
KP031320	**KP031420**	M20	10	30	6,5	2,5	60	120	10	5

Light elastic force

Code Cl 5.8	Code AISI303	D	D1	L	H	G	Spring force initial pressure F1 (approx. N)	Spring force final pressure F2 (approx. N)	Pack. Cl 5.8 (pcs)	Pack. AISI303 (pcs)
KP0313104	**KP0314104**	M4	1,8	9	1,5	0,6	3	10	25	10
KP0313105	**KP0314105**	M5	2,4	12	2	0,8	3	10	25	10
KP0313106	**KP0314106**	M6	2,7	14	2	1	4	10	25	10
KP0313108	**KP0314108**	M8	4	16	2	1,2	7	15	25	10
KP0313110	**KP0314110**	M10	4,5	19	2,5	1,6	9	16	25	10
KP0313112	**KP0314112**	M12	6	22	3,5	2	14	26	10	5
KP0313116	**KP0314116**	M16	8,5	24	4,5	2,5	22	50	10	5
KP0313120	**KP0314120**	M20	10	30	6,5	2,5	30	60	10	5

Enhanced elastic force

Code Cl 5.8	Code AISI303	D	D1	L	H	G	Spring force initial pressure F1 (approx. N)	Spring force final pressure F2 (approx. N)	Pack. Cl 5.8 (pcs)	Pack. AISI303 (pcs)
KP0313205	**KP0314205**	M5	2,4	12	2	0,8	9	25	25	10
KP0313206	**KP0314206**	M6	2,7	14	2	1	11	25	25	10
KP0313208	**KP0314208**	M8	4	16	2	1,2	22	43	25	10
KP0313210	**KP0314210**	M10	4,5	19	2,5	1,6	20	54	25	10
KP0313212	**KP0314212**	M12	6	22	3,5	2	36	94	10	5
KP0313216	**KP0314216**	M16	8,5	24	4,5	2,5	60	110	10	5

Steel
MATERIAL - SURFACE TREATMENT
Body: Cl 5.8 (Steel) burnished
Ball: AC (Steel) tempered
Spring: Cl D (Steel for springs)

Stainless steel
MATERIAL - SURFACE TREATMENT
Body: AISI303 (Stainless steel)
Ball: AISI420 (Stainless steel) tempered
Spring: AISI301 (Stainless steel)

NOTES
F = Applicable elastic force between F1 and F2

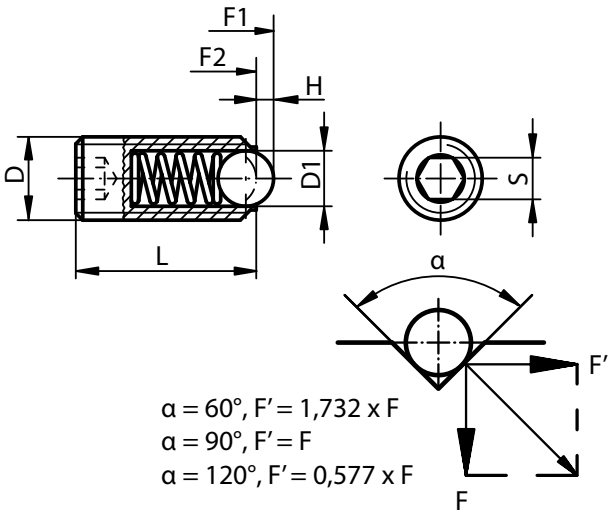

Standard elastic force

Code Cl 5.8	Code AISI303	D	D1	L	H	S	Spring force initial pressure F1 (approx. N)	Spring force final pressure F2 (approx. N)	Pack. Cl 5.8 (pcs)	Pack. AISI303 (pcs)
KP031503	**KP031603**	M3	1,5	9	0,4	1,5	1,5	3	25	10
KP031504	**KP031604**	M4	2,5	10	0,8	2	4	10	25	10
KP031505	**KP031605**	M5	3	14	0,9	2,5	6	11	25	10
KP031506	**KP031606**	M6	3,5	15	1	3	9	13	25	10
KP031508	**KP031608**	M8	5	18	1,5	4	15	30	25	10
KP031510	**KP031610**	M10	6	23	2	5	20	35	25	10
KP031512	**KP031612**	M12	8	26	2,5	6	30	55	10	5
KP031516	**KP031616**	M16	10	33	3,5	8	65	125	10	5
KP031520	**KP031620**	M20	12	43	4,5	10	80	160	5	1
KP031524	**KP031624**	M24	15	48	5,5	12	90	180	5	1

Enhanced elastic force

Code Cl 5.8	Code AISI303	D	D1	L	H	S	Spring force initial pressure F1 (approx. N)	Spring force final pressure F2 (approx. N)	Pack. Cl 5.8 (pcs)	Pack. AISI303 (pcs)
KP0315203	**KP0316203**	M3	1,5	9	0,4	1,5	5	7	25	10
KP0315204	**KP0316204**	M4	2,5	10	0,8	2	12	22	25	10
KP0315205	**KP0316205**	M5	3	14	0,9	2,5	19	30	25	10
KP0315206	**KP0316206**	M6	3,5	15	1	3	28	40	25	10
KP0315208	**KP0316208**	M8	5	18	1,5	4	47	73	25	10
KP0315210	**KP0316210**	M10	6	23	2	5	66	100	25	10
KP0315212	**KP0316212**	M12	8	26	2,5	6	66	120	10	5
KP0315216	**KP0316216**	M16	10	33	3,5	8	90	180	10	5
KP0315220	**KP0316220**	M20	12	43	4,5	10	115	240	5	1
KP0315224	**KP0316224**	M24	15	48	5,5	12	130	270	5	1

Long model, standard elastic force

Code Cl 5.8	Code AISI303	D	D1	L	H	S	Spring force initial pressure F1 (approx. N)	Spring force final pressure F2 (approx. N)	Pack. Cl 5.8 (pcs)	Pack. AISI303 (pcs)
KP0315404	**KP0316404**	M4	2,5	16	0,8	2	4	10	25	10
KP0315405	**KP0316405**	M5	3	20	0,9	2,5	6	11	25	10
KP0315406	**KP0316406**	M6	3,5	25	1	3	9	13	25	10
KP0315408	**KP0316408**	M8	5	30	1,5	4	15	30	25	10
KP0315410	**KP0316410**	M10	6	35	2	5	20	35	25	10
KP0315412	**KP0316412**	M12	8	40	2,5	6	30	55	10	5
KP0315416	**KP0316416**	M16	10	45	3,5	8	65	125	10	5

HEX SOCKET SPRING PLUNGER - THRUST PIN
steel

MATERIAL - SURFACE TREATMENT
Body: Cl 5.8 (Steel) burnished
Pin: AC (Steel) tempered
Spring: Cl D (Steel for springs)

NOTES
Grub screw is glued in.
1) Assembly key to be ordered separately (package 1 pcs).

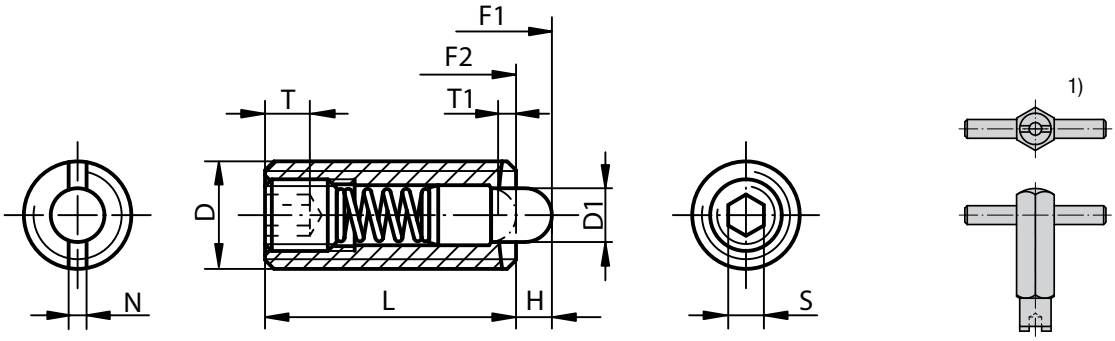

Standard elastic force

Code	D	D1	L	H	T	T1	N	S	Spring force initial pressure F1 (approx. N)	Spring force final pressure F2 (approx. N)	Code mounting key	Package (pcs)
KP031703	M3	1	10	1,5	1,5	1	0,4	0,7	0,5	3	KP0317903	25
KP031704	M4	1,5	15	1,5	2	0,6	0,6	1,3	5	16	KP0317904	25
KP031705	M5	2,4	18	2,3	2	0,8	0,8	1,5	6	20	KP0317905	25
KP031706	M6	2,7	20	2,5	2,5	1	1	2	7	20	KP0317906	25
KP031708	M8	3,5	22	3	3	1,4	1,2	2,5	9	35	KP0317908	10
KP031710	M10	4	22	3	3,5	1,4	1,6	3	9	35	KP0317910	10
KP031712	M12	6	28	4	5	2	2	4	12	55	KP0317912	10
KP031716	M16	7,5	32	5	6	2,5	2,5	5	45	100	KP0317916	10
KP031720	M20	10	40	7	8	3	2,5	6	60	120	-	5
KP031724	M24	12	52	10	10	3	2,5	8	80	160	-	5

Light elastic force

Code	D	D1	L	H	T	T1	N	S	Spring force initial pressure F1 (approx. N)	Spring force final pressure F2 (approx. N)	Code mounting key	Package (pcs)
KP0317104	M4	1,5	15	1,5	2	0,6	0,6	1,3	2	7	KP0317904	25
KP0317105	M5	2,4	18	2,3	2	0,8	0,8	1,5	3	10	KP0317905	25
KP0317106	M6	2,7	20	2,5	2,5	1	1	2	3	9	KP0317906	25
KP0317108	M8	3,5	22	3	3	1,4	1,2	2,5	4	16	KP0317908	10
KP0317110	M10	4	22	3	3,5	1,4	1,6	3	4	16	KP0317910	10
KP0317112	M12	6	28	4	5	2	2	4	5	27	KP0317912	10
KP0317116	M16	7,5	32	5	6	2,5	2,5	5	20	45	KP0317916	10

Enhanced elastic force

Code	D	D1	L	H	T	T1	N	S	Spring force initial pressure F1 (approx. N)	Spring force final pressure F2 (approx. N)	Code mounting key	Package (pcs)
KP0317205	M5	2,4	18	2,3	2	0,8	0,8	1,5	11	29	KP0317905	25
KP0317206	M6	2,7	20	2,5	2,5	1	1	2	14	37	KP0317906	25
KP0317208	M8	3,5	22	3	3	1,4	1,2	2,5	22	65	KP0317908	10
KP0317210	M10	4	22	3	3,5	1,4	1,6	3	19	70	KP0317910	10
KP0317212	M12	6	28	4	5	2	2	4	25	85	KP0317912	10
KP0317216	M16	7,5	32	5	6	2,5	2,5	5	60	150	KP0317916	10
KP0317220	M20	10	40	7	8	3	2,5	6	75	190	-	5
KP0317224	M24	12	52	10	10	3	2,5	8	95	240	-	5

MATERIAL - SURFACE TREATMENT
Body: Cl 5.8 (Steel) burnished
Pin: POM (Acetylene)
Spring: Cl D (Steel for springs)

NOTES
Grub screw is glued in.
1) Assembly key to be ordered separately (package 1 pcs).

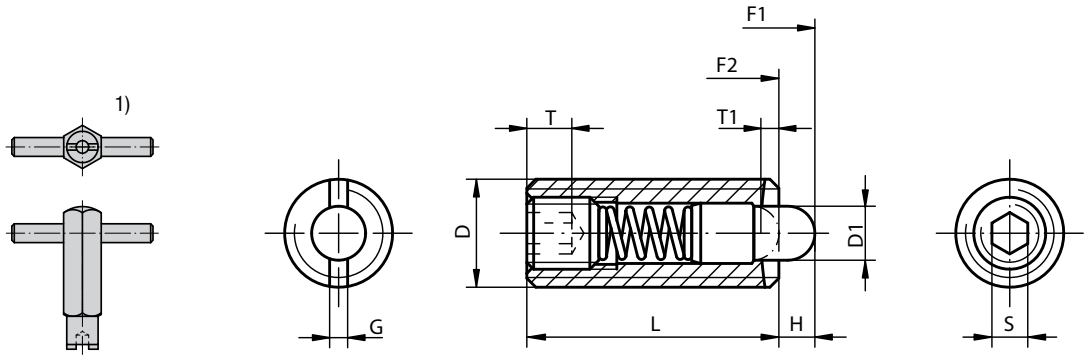

Standard elastic force

Code	D	D1	L	H	T	T1	G	S	Spring force initial pressure F1 (approx. N)	Spring force final pressure F2 (approx. N)	Code mounting key	Package (pcs)
KP031803	M3	1	10	1,5	1,5	1	0,4	0,7	0,5	3	KP0317903	25
KP031804	M4	1,5	15	1,5	2	0,6	0,6	1,3	5	16	KP0317904	25
KP031805	M5	2,4	18	2,3	2	0,8	0,8	1,5	6	20	KP0317905	25
KP031806	M6	2,7	20	2,5	2,5	1	1	2	7	20	KP0317906	25
KP031808	M8	3,5	22	3	3	1,4	1,2	2,5	9	35	KP0317908	10
KP031810	M10	4	22	3	3,5	1,4	1,6	3	9	35	KP0317910	10
KP031812	M12	6	28	4	5	2	2	4	12	55	KP0317912	10
KP031816	M16	7,5	32	5	6	2,5	2,5	5	45	100	KP0317916	10

Light elastic force

Code	D	D1	L	H	T	T1	G	S	Spring force initial pressure F1 (approx. N)	Spring force final pressure F2 (approx. N)	Code mounting key	Package (pcs)
KP0318104	M4	1,5	15	1,5	2	0,6	0,6	1,3	2	7	KP0317904	25
KP0318105	M5	2,4	18	2,3	2	0,8	0,8	1,5	3	10	KP0317905	25
KP0318106	M6	2,7	20	2,5	2,5	1	1	2	3	9	KP0317906	25
KP0318108	M8	3,5	22	3	3	1,4	1,2	2,5	4	16	KP0317908	10
KP0318110	M10	4	22	3	3,5	1,4	1,6	3	4	16	KP0317910	10
KP0318112	M12	6	28	4	5	2	2	4	5	27	KP0317912	10
KP0318116	M16	7,5	32	5	6	2,5	2,5	5	20	45	KP0317916	10

HEX SOCKET SPRING PLUNGER - THRUST PIN
stainless steel

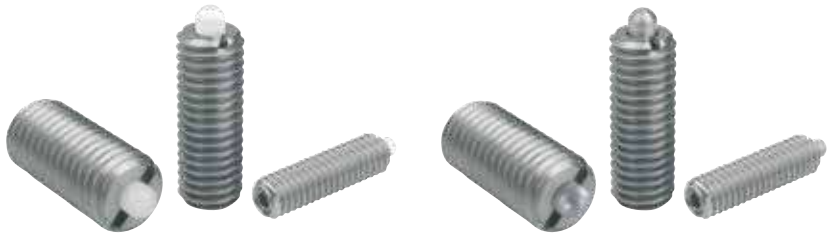

Stainless steel
MATERIAL - SURFACE TREATMENT
Body: AISI303 (Stainless steel)
Pin: AISI420 (Stainless steel) tempered
Spring: AISI301 (Stainless steel)

Stainless steel - POM pin
MATERIAL - SURFACE TREATMENT
Body: AISI303 (Stainless steel)
Pin: POM (Acetylene)
Spring: AISI301 (Stainless steel)

NOTES
Grub screw is glued in.
1) Assembly key to be ordered separately (package 1 pcs).

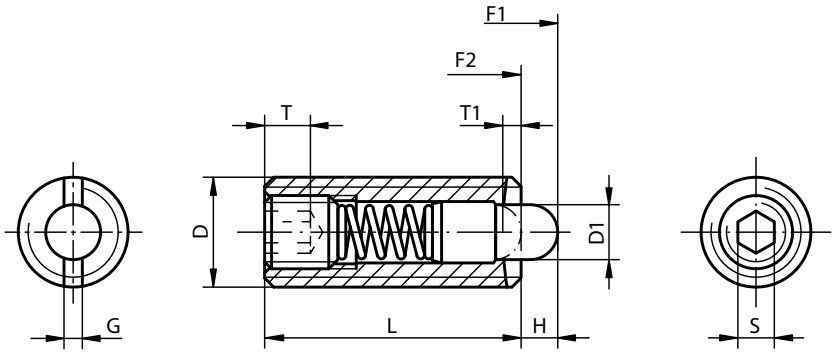

Standard elastic force

Code AISI 420 pin	Code POM pin	D	D1	L	H	T	T1	G	S	Spring force initial pressure F1 (approx. N)	Spring force final pressure F2 (approx. N)	Code mounting key	Package (pcs)
KP031903	**KP032003**	M3	1	10	1,5	1,5	1	0,4	0,7	0,5	3	KP0317903	10
KP031904	**KP032004**	M4	1,5	15	1,5	2	0,6	0,6	1,3	5	16	KP0317904	10
KP031905	**KP032005**	M5	2,4	18	2,3	2	0,8	0,8	1,5	5	17	KP0317905	10
KP031906	**KP032006**	M6	2,7	20	2,5	2,5	1	1	2	6	17	KP0317906	10
KP031908	**KP032008**	M8	3,5	22	3	3	1,4	1,2	2,5	7	29	KP0317908	10
KP031910	**KP032010**	M10	4	22	3	3,5	1,4	1,6	3	8	31	KP0317910	5
KP031912	**KP032012**	M12	6	28	4	5	2	2	4	10	47	KP0317912	5
KP031916	**KP032016**	M16	7,5	32	5	6	2,5	2,5	5	45	100	KP0317916	5

Enhanced elastic force

Code AISI 420 pin	D	D1	L	H	T	T1	G	S	Spring force initial pressure F1 (approx. N)	Spring force final pressure F2 (approx. N)	Code mounting key	Package (pcs)
KP0319205	M5	2,4	18	2,3	2	0,8	0,8	1,5	9	26	KP0317905	10
KP0319206	M6	2,7	20	2,5	2,5	1	1	2	11	35	KP0317906	10
KP0319208	M8	3,5	22	3	3	1,4	1,2	2,5	15	48	KP0317908	10
KP0319210	M10	4	22	3	3,5	1,4	1,6	3	15	58	KP0317910	5
KP0319212	M12	6	28	4	5	2	2	4	19	74	KP0317912	5

Long-Lok, the most advanced thread locking method

Long-Lok gives you the following advantages:

1. Vibration resistance
The integrated Long-Lok thread lock secures spring plungers efficiently.
No loosening or falling out after impacts, knocks or vibrations.

2. Extremly high loosening torque
The resilient nylon insert is squeezed like a wedge between the thread of the spring plunger and the fastening component.
By means of the nylon locking system, the thread backlash is shifted to one side, which in turn causes surface pressure at the thread flanks.
The resulting loosening torque is higher than that achieved with most conventional, mechanical methods.

3. Secure in every position
Long-Lok requires neither initial tension nor any defined position.
This is ideal for the positioning of the spring plungers.

4. Saves assembly time and storage space
Long-Lok is integrated into the spring plungers. There are no additional components. No circlips, no spring washers, no locking nuts.
As a result, assembly and stocking costs are reduced considerably.

5. For repeated use
When using the Long-Lok the first time, it requires a slightly higher tightening torque.
After third or fourth use, the last reached value remains nearly constant.

6. Ideal solution, from M3 to M16
Light-weight or heavy-weight: name your requirements! We will supply you with the suitable spring plungers with integrated Long-Lok thread lock.

SLOTTED SPRING PLUNGER - BALL
with Long-Lok safety insert

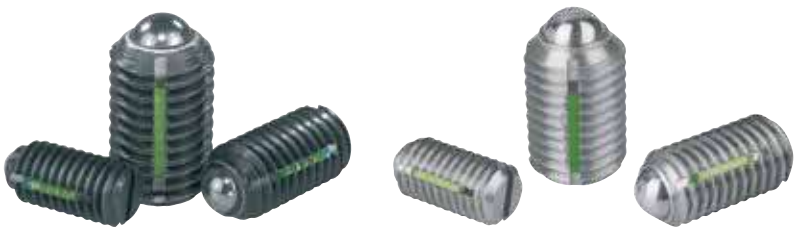

Steel
MATERIAL - SURFACE TREATMENT

Body:	Cl 5.8 (Steel) burnished
Ball:	AC (Steel) tempered
Spring:	Cl D (Steel for springs)
Long-Lok insert:	PA (Polyamide)

Stainless steel
MATERIAL - SURFACE TREATMENT

Body:	AISI303 (Stainless steel)
Ball:	AISI420 (Stainless steel) tempered
Spring:	AISI301 (Stainless steel)
Long-Lok insert:	PA (Polyamide)

NOTES
L2 = approx. 2x thread pitch
F = Applicable elastic force between F1 and F2

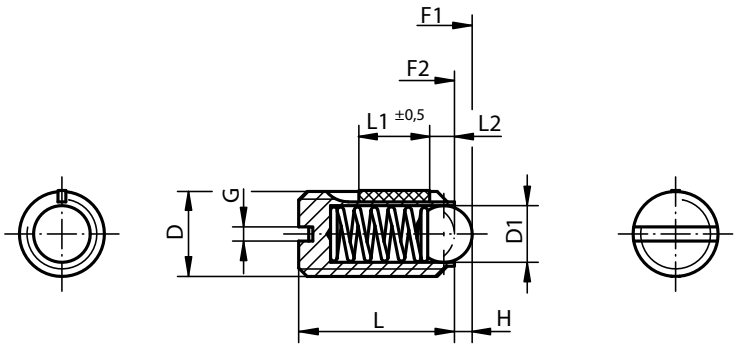

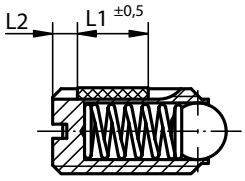

D = M3, M4, M5, M6

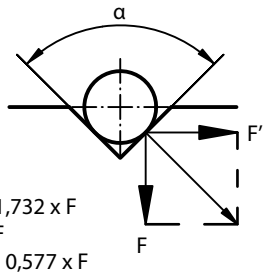

α = 60°, F′ = 1,732 x F
α = 90°, F′ = F
α = 120°, F′ = 0,577 x F

Standard elastic force

Code Cl 5.8	Code AISI303	D	D1	L	L1	H	G	Spring force initial pressure F1 (approx. N)	Spring force final pressure F2 (approx. N)	Tightening torque (Nm)	Unscrewing torque (Nm)	Package (pcs)
KP032103	**KP032203**	M3	1,5	7	4	0,4	0,4	1,5	3	0,1	0,07	10
KP032104	**KP032204**	M4	2,5	9	5	0,8	0,6	4	10	0,18	0,12	10
KP032105	**KP032205**	M5	3	12	6	0,9	0,8	6	11	0,12	0,08	10
KP032106	**KP032206**	M6	3,5	14	7	1	1	9	13	0,43	0,21	10
KP032108	**KP032208**	M8	5	16	8	1,2	1,2	15	30	1,09	0,37	10
KP032110	**KP032210**	M10	6	19	9	1,6	1,6	20	35	1,36	0,62	10
KP032112	**KP032212**	M12	8	22	10	2	2	30	55	2,03	1,36	5
KP032116	**KP032216**	M16	10	24	14	2,5	2,5	65	125	3,95	2,95	5

Enhanced elastic force

Code Cl 5.8	Code AISI303	D	D1	L	L1	H	G	Spring force initial pressure F1 (approx. N)	Spring force final pressure F2 (approx. N)	Tightening torque (Nm)	Unscrewing torque (Nm)	Package (pcs)
KP0321203	**KP0322203**	M3	1,5	7	4	0,4	0,4	5	7	0,1	0,07	10
KP0321204	**KP0322204**	M4	2,5	9	5	0,8	0,6	12	22	0,18	0,12	10
KP0321205	**KP0322205**	M5	3	12	6	0,9	0,8	19	30	0,12	0,08	10
KP0321206	**KP0322206**	M6	3,5	14	7	1	1	28	40	0,43	0,21	10
KP0321208	**KP0322208**	M8	5	16	8	1,2	1,2	47	73	1,09	0,37	10
KP0321210	**KP0322210**	M10	6	19	9	1,6	1,6	66	100	1,36	0,62	10
KP0321212	**KP0322212**	M12	8	22	10	2	2	66	120	2,03	1,36	5
KP0321216	**KP0322216**	M16	10	24	14	2,5	2,5	90	180	3,95	2,95	5

Steel
MATERIAL - SURFACE TREATMENT
Body: Cl 5.8 (Steel) burnished
Ball: AC (Steel) tempered
Spring: Cl D (Steel for springs)
Long-Lok insert: PA (Polyamide)

Stainless steel
MATERIAL - SURFACE TREATMENT
Body: AISI303 (Stainless steel)
Ball: AISI420 (Stainless steel) tempered
Spring: AISI301 (Stainless steel)
Long-Lok insert: PA (Polyamide)

NOTES
L2 = approx. 2x thread pitch
F = Applicable elastic force between F1 and F2

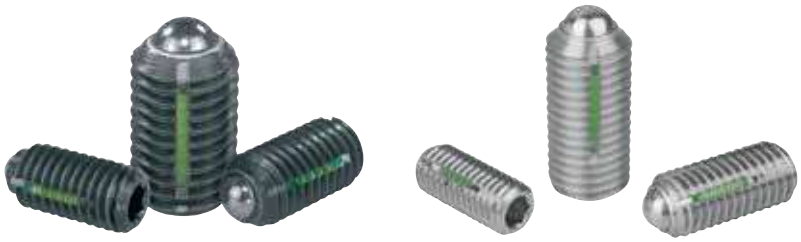

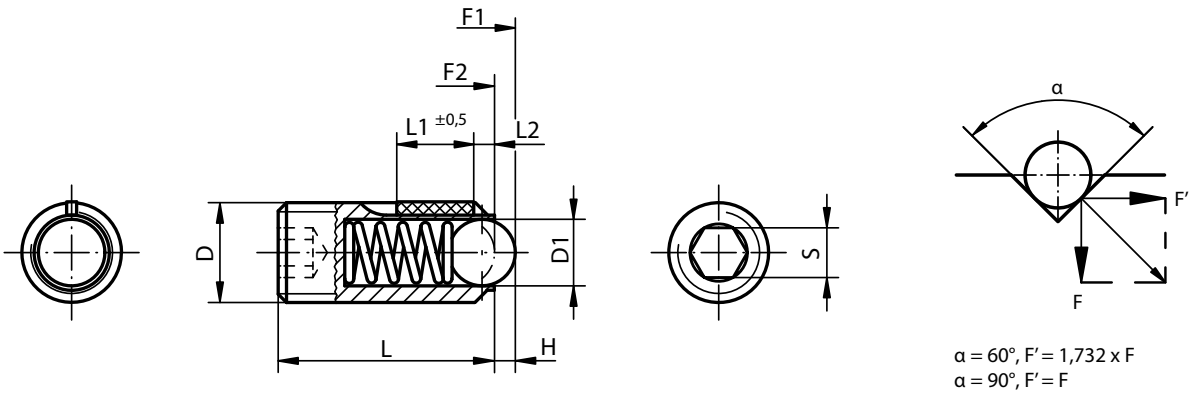

α = 60°, F' = 1,732 x F
α = 90°, F' = F
α = 120°, F' = 0,577 x F

Standard elastic force

Code Cl 5.8	Code AISI303	D	D1	L	L1	H	S	Spring force initial pressure F1 (approx. N)	Spring force final pressure F2 (approx. N)	Tightening torque (Nm)	Unscrewing torque (Nm)	Package (pcs)
KP032503	**KP032603**	M3	1,5	9	4	0,4	1,5	1,5	3	0,1	0,07	10
KP032504	**KP032604**	M4	2,5	10	5	0,8	2	4	10	0,18	0,12	10
KP032505	**KP032605**	M5	3	14	6	0,9	2,5	6	11	0,12	0,08	10
KP032506	**KP032606**	M6	3,5	15	7	1	3	9	13	0,44	0,21	10
KP032508	**KP032608**	M8	5	18	8	1,5	4	15	30	1,1	0,38	10
KP032510	**KP032610**	M10	6	23	9	2	5	20	35	1,3	0,6	10
KP032512	**KP032612**	M12	8	26	10	2,5	6	30	55	2	1,3	5
KP032516	**KP032616**	M16	10	33	14	3,5	8	65	125	3,9	3	5

Enhanced elastic force

Code Cl 5.8	Code AISI303	D	D1	L	L1	H	S	Spring force initial pressure F1 (approx. N)	Spring force final pressure F2 (approx. N)	Tightening torque (Nm)	Unscrewing torque (Nm)	Package (pcs)
KP0325203	**KP0326203**	M3	1,5	9	4	0,4	1,5	5	7	0,1	0,07	10
KP0325204	**KP0326204**	M4	2,5	10	5	0,8	2	12	22	0,18	0,12	10
KP0325205	**KP0326205**	M5	3	14	6	0,9	2,5	19	30	0,12	0,08	10
KP0325206	**KP0326206**	M6	3,5	15	7	1	3	28	40	0,44	0,21	10
KP0325208	**KP0326208**	M8	5	18	8	1,5	4	47	73	1,1	0,38	10
KP0325210	**KP0326210**	M10	6	23	9	2	5	66	100	1,3	0,6	10
KP0325212	**KP0326212**	M12	8	26	10	2,5	6	66	120	2	1,3	5
KP0325216	**KP0326216**	M16	10	33	14	3,5	8	90	180	3,9	3	5

Stainless steel body and ball
MATERIAL - SURFACE TREATMENT
Body: AISI303 (Stainless steel)
Ball: AISI420 (Stainless steel) tempered
Spring: AISI301 (Stainless steel)

Stainless steel body, POM ball
MATERIAL - SURFACE TREATMENT
Body: AISI303 (Stainless steel)
Ball: POM (Acetylene)
Spring: AISI301 (Stainless steel)

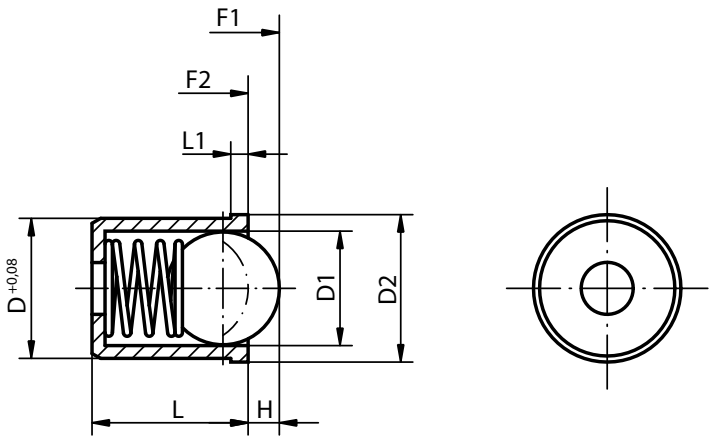

Code AISI420 ball	Code POM ball	D	D1	D2	L	L1	H	Spring force initial pressure F1 (approx. N)	Spring force final pressure F2 (approx. N)	Package (pcs)
KP033302	**-**	2	1,5	2,5	3	0,6	0,4	1,2	2,5	50
KP033303	**-**	3	2,5	3,5	4	0,8	0,65	1,7	3,4	50
KP033304	**KP0333304**	4	3	4,6	5	1	0,8	3	7	50
KP033305	**KP0333305**	5	4	5,6	6	1	1	4	7	50
KP033306	**KP0333306**	6	5	6,5	7	1	1,5	6	12	50
KP033308	**KP0333308**	8	6,5	8,5	9	1	1,8	6	12	50
KP033310	**KP0333310**	10	8	12	13,5	2,5	2,7	10	20	25
KP033312	**KP0333312**	12	10	14	16	2,5	3,5	15	25	25

Plastic body, stainless steel ball
MATERIAL - SURFACE TREATMENT
Body: TMP (Thermoplastic) black
Ball: AISI420 (Stainless steel) tempered
Spring: AISI301 (Stainless steel)

Plastic body, POM ball
MATERIAL - SURFACE TREATMENT
Body: TMP (Thermoplastic)
Ball: POM (Acetylene)
Spring: AISI301 (Stainless steel)

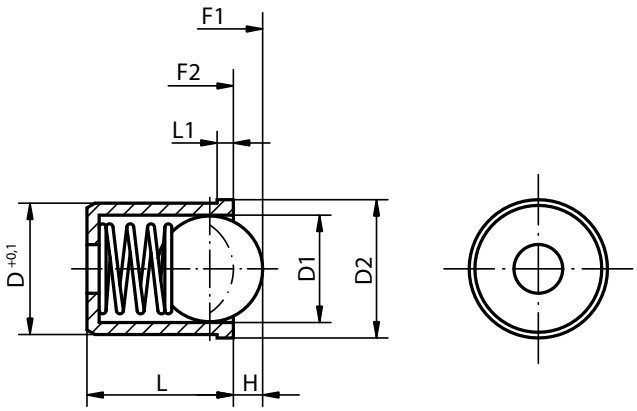

Code AISI303 ball	Code POM ball	D	D1	D2	L	L1	H	Spring force initial pressure F1 (approx. N)	Spring force final pressure F2 (approx. N)	Package (pcs)
KP033404	**KP0334204**	4	3	4,6	5	1	0,7	3	7	50
KP033405	**KP0334205**	5	4	5,6	6	1	1	4	7	50
KP033406	**KP0334206**	6	5	6,5	7	1	1,5	6	12	50
KP033408	**KP0334208**	8	6,5	8,5	9	1	1,8	6	12	50
KP033410	**KP0334210**	10	8	12	13,5	2,5	2,7	10	20	25
KP033412	**KP0334212**	12	10	14	16	2,5	3,5	15	25	25

SPRING PLUNGER
with head

Steel
MATERIAL - SURFACE TREATMENT
Body: Cl 5.8 (Steel) burnished
Ball: AC (Steel) tempered
Spring: Cl D (Steel for springs)

Stainless steel
MATERIAL - SURFACE TREATMENT
Body: AISI303 (Stainless steel)
Ball: AISI420 (Stainless steel) tempered
Spring: AISI301 (Stainless steel)

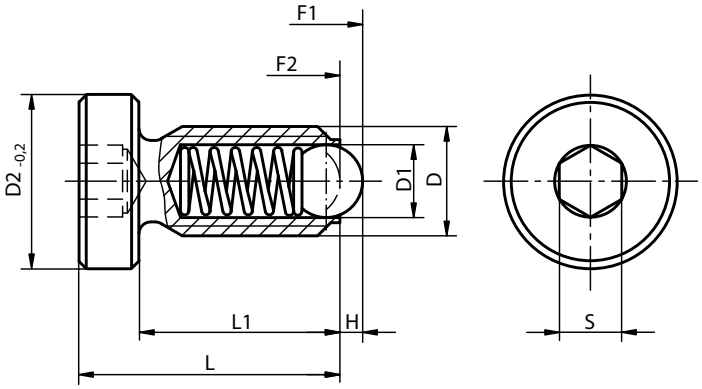

Code Cl 5.8	Code AISI303	D	D1	D2	L	L1	H	S	Spring force initial pressure F1 (approx. N)	Spring force final pressure F2 (approx. N)	Pack. Cl 5.8 (pcs)	Pack. AISI303 (pcs)
KP033606	**KP0336061**	M6	3,5	10	16	12	1	3	9	13	10	5
KP033608	**KP0336081**	M8	5	13	21	16	1,5	4	15	30	10	5
KP033610	**KP0336101**	M10	6	16	26	20	2	5	20	35	10	5
KP033612	**KP0336121**	M12	8	18	32	25	2,5	6	30	55	10	5

Steel
MATERIAL - SURFACE TREATMENT
Body: 11SMnPb30 (Steel) white galvanized
Indexing pin: AISI303 (Stainless steel)
Grip: TMP (Thermoplastic) blackish grey

Stainless steel
MATERIAL - SURFACE TREATMENT
Body: AISI303 (Stainless steel)
Indexing pin: AISI303 (Stainless steel)
Grip: TMP (Thermoplastic) blackish grey

NOTES
This affordable indexing plunger is ideal for applications that do not require extreme precision. Do not exceed the maximum torque indicated below during assembly. Special executions, fine thread available.

TYPE A
non-lockout type without lock nut

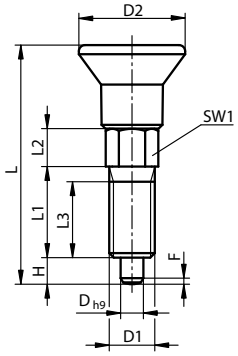

TYPE B
non-lockout type with lock nut

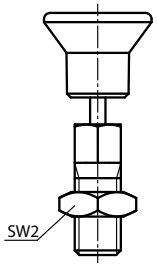

TYPE C
lockout type without lock nut

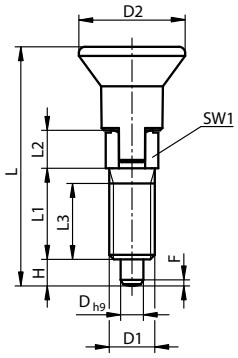

TYPE D
lockout type with lock nut

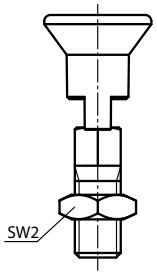

Steel, untempered indexing pin

Code	Type	D	D1	D2	L	L1	L2	L3	H	SW1	SW2	F	Spring force initial pressure F1 (approx. N)	Spring force final pressure F2 (approx. N)	Tightening torque max Nm	Package (pcs)
KP074701903060	A	3	M6	14	31,5	12	5	10	3,5	6	-	0,8 x 30°	4	10	2	1
KP074701004060	A	4	M6	14	36	15	6	13	4	6	-	1 x 30°	6	12	2	1
KP074701105080	A	5	M8	14	40	17	7	15	5	8	-	1,3 x 30°	6	12	7	1
KP074701206100	A	6	M10	18	47,5	20	8	17	6	10	-	1,8 x 30°	8	15	15	1
KP074701308120	A	8	M12	25	61,7	26	10	23	8	12	-	2,3 x 30°	8	19	20	1
KP074703903060	C	3	M6	14	31,5	12	5	10	3,5	6	-	0,8 x 30°	4	10	2	1
KP074703004060	C	4	M6	14	36	15	6	13	4	6	-	1 x 30°	6	12	2	1
KP074703105080	C	5	M8	14	40	17	7	15	5	8	-	1,3 x 30°	6	12	7	1
KP074703206100	C	6	M10	18	47,5	20	8	17	6	10	-	1,8 x 30°	8	15	15	1
KP074703308120	C	8	M12	25	61,7	26	10	23	8	12	-	2,3 x 30°	8	19	20	1
KP074702903060	B	3	M6	14	31,5	12	5	10	3,5	6	10	0,8 x 30°	4	10	2	1
KP074702004060	B	4	M6	14	36	15	6	13	4	6	10	1 x 30°	6	12	2	1
KP074702105080	B	5	M8	14	40	17	7	15	5	8	13	1,3 x 30°	6	12	7	1
KP074702206100	B	6	M10	18	47,5	20	8	17	6	10	17	1,8 x 30°	8	15	15	1
KP074702308120	B	8	M12	25	61,7	26	10	23	8	12	19	2,3 x 30°	8	19	20	1
KP074704903060	D	3	M6	14	31,5	12	5	10	3,5	6	10	0,8 x 30°	4	10	2	1
KP074704004060	D	4	M6	14	36	15	6	13	4	6	10	1 x 30°	6	12	2	1
KP074704105080	D	5	M8	14	40	17	7	15	5	8	13	1,3 x 30°	6	12	7	1
KP074704206100	D	6	M10	18	47,5	20	8	17	6	10	17	1,8 x 30°	8	15	15	1
KP074704308120	D	8	M12	25	61,7	26	10	23	8	12	19	2,3 x 30°	8	19	20	1

Steel
MATERIAL - SURFACE TREATMENT
Body: 11SMnPb30 (Steel) white galvanized
Indexing pin: AISI303 (Stainless steel)
Grip: TMP (Thermoplastic) blackish grey

Stainless steel
MATERIAL - SURFACE TREATMENT
Body: AISI303 (Stainless steel)
Indexing pin: AISI303 (Stainless steel)
Grip: TMP (Thermoplastic) blackish grey

NOTES
This affordable indexing plunger is ideal for applications that do not require extreme precision. Do not exceed the maximum torque indicated below during assembly. Special executions, fine thread available.

TYPE A
non-lockout type
without lock nut

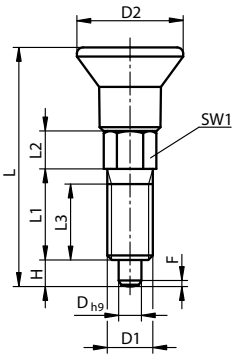

TYPE B
non-lockout type
with lock nut

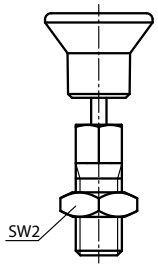

TYPE C
lockout type
without lock nut

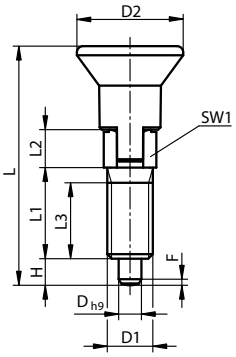

TYPE D
lockout type
with lock nut

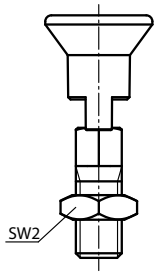

Stainless steel, untempered indexing pin

Code	Type	D	D1	D2	L	L1	L2	L3	H	SW1	SW2	F	Spring force initial pressure F1 (approx. N)	Spring force final pressure F2 (approx. N)	Tightening torque max Nm	Package (pcs)
KP074711903060	A	3	M6	14	31,5	12	5	10	3,5	6	-	0,8 x 30°	4	10	2	1
KP074711004060	A	4	M6	14	36	15	6	13	4	6	-	1 x 30°	6	12	2	1
KP074711105080	A	5	M8	14	40	17	7	15	5	8	-	1,3 x 30°	6	12	7	1
KP074711206100	A	6	M10	18	47,5	20	8	17	6	10	-	1,8 x 30°	8	15	15	1
KP074711308120	A	8	M12	25	61,7	26	10	23	8	12	-	2,3 x 30°	8	19	20	1
KP074713903060	C	3	M6	14	31,5	12	5	10	3,5	6	-	0,8 x 30°	4	10	2	1
KP074713004060	C	4	M6	14	36	15	6	13	4	6	-	1 x 30°	6	12	2	1
KP074713105080	C	5	M8	14	40	17	7	15	5	8	-	1,3 x 30°	6	12	7	1
KP074713206100	C	6	M10	18	47,5	20	8	17	6	10	-	1,8 x 30°	8	15	15	1
KP074713308120	C	8	M12	25	61,7	26	10	23	8	12	-	2,3 x 30°	8	19	20	1
KP074712903060	B	3	M6	14	31,5	12	5	10	3,5	6	10	0,8 x 30°	4	10	2	1
KP074712004060	B	4	M6	14	36	15	6	13	4	6	10	1 x 30°	6	12	2	1
KP074712105080	B	5	M8	14	40	17	7	15	5	8	13	1,3 x 30°	6	12	7	1
KP074712206100	B	6	M10	18	47,5	20	8	17	6	10	17	1,8 x 30°	8	15	15	1
KP074712308120	B	8	M12	25	61,7	26	10	23	8	12	19	2,3 x 30°	8	19	20	1
KP074714903060	D	3	M6	14	31,5	12	5	10	3,5	6	10	0,8 x 30°	4	10	2	1
KP074714004060	D	4	M6	14	36	15	6	13	4	6	10	1 x 30°	6	12	2	1
KP074714105080	D	5	M8	14	40	17	7	15	5	8	13	1,3 x 30°	6	12	7	1
KP074714206100	D	6	M10	18	47,5	20	8	17	6	10	17	1,8 x 30°	8	15	15	1
KP074714308120	D	8	M12	25	61,7	26	10	23	8	12	19	2,3 x 30°	8	19	20	1

Tempered steel
MATERIAL - SURFACE TREATMENT
Body: Cl 5.8 (Steel) burnished
Indexing pin: Cl 5.8 (Steel) tempered, ground, burnished
Grip: TMP (Thermoplastic) blackish grey

Tempered stainless steel
MATERIAL - SURFACE TREATMENT
Body: AISI303 (Stainless steel)
Indexing pin: AISI420 (Stainless steel) tempered, ground
Grip: TMP (Thermoplastic) blackish grey

Untempered stainless steel
MATERIAL - SURFACE TREATMENT
Body: AISI303 (Stainless steel)
Indexing pin: AISI303 (Stainless steel) ground
Grip: TMP (Thermoplastic) blackish grey

NOTES
Indexing plungers are used to prevent any change in locking position due to lateral forces. A new locking position can only be set after the plunger has been manually disengaged. If the plunger has to stay disengaged, and to prevent the pin from unlocking, we recommend using from C/D.

ACCESSORIES
Spacing rings KP06659...

TYPE A
non-lockout type
without lock nut

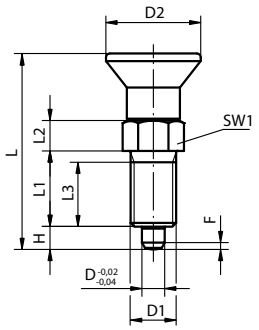

TYPE B
non-lockout type
with lock nut

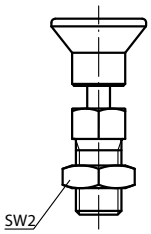

TYPE C
lockout type
without lock nut

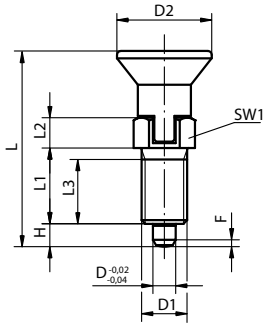

TYPE D
lockout type
with lock nut

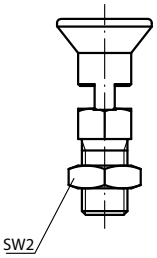

Steel, tempered indexing pin

Code	Type	D	D1	D2	L	L1	L2	L3	H	SW1	SW2	F	Spring force initial pressure F1 (approx. N)	Spring force final pressure F2 (approx. N)	Package (pcs)
KP03381903	A	3	M6 x 0,75	14	31,5	12	5	10	3,5	8	-	0,8 x 30°	4,5	10	1
KP03381004	A	4	M8 x 1	18	38,5	15	6	13	4	10	-	1 x 30°	6	12	1
KP03381105	A	5	M10 x 1	21	43,5	17	7	15	5	13	-	1,3 x 30°	5	12	1
KP03381206	A	6	M12 x 1,5	25	51,7	20	8	17	6	14	-	1,8 x 30°	6	14	1
KP03381308	A	8	M16 x 1,5	33	68	26	10	23	8	19	-	2,3 x 30°	15	35	1
KP03381410	A	10	M20 x 1,5	33	74	28	12	25	10	22	-	2,8 x 30°	15	34	1
KP03381412	A	12	M20 x 1,5	33	78	28	14	25	12	22	-	2,8 x 30°	15	39	1
KP03381516	A	16	M24 x 2	40	96	32	18	28	16	27	-	3,2 x 30°	20	46	1
KP03383903	C	3	M6 x 0,75	14	31,5	12	5	10	3,5	8	-	0,8 x 30°	4,5	10	1
KP03383004	C	4	M8 x 1	18	38,5	15	6	13	4	10	-	1 x 30°	6	12	1
KP03383105	C	5	M10 x 1	21	43,5	17	7	15	5	13	-	1,3 x 30°	5	12	1
KP03383206	C	6	M12 x 1,5	25	51,7	20	8	17	6	14	-	1,8 x 30°	6	14	1
KP03383308	C	8	M16 x 1,5	33	68	26	10	23	8	19	-	2,3 x 30°	15	35	1
KP03383410	C	10	M20 x 1,5	33	74	28	12	25	10	22	-	2,8 x 30°	15	34	1
KP03383412	C	12	M20 x 1,5	33	78	28	14	25	12	22	-	2,8 x 30°	15	39	1
KP03383516	C	16	M24 x 2	40	96	32	18	28	16	27	-	3,2 x 30°	20	46	1
KP03382903	B	3	M6 x 0,75	14	31,5	12	5	10	3,5	8	10	0,8 x 30°	4,5	10	1
KP03382004	B	4	M8 x 1	18	38,5	15	6	13	4	10	13	1 x 30°	6	12	1
KP03382105	B	5	M10 x 1	21	43,5	17	7	15	5	13	17	1,3 x 30°	5	12	1
KP03382206	B	6	M12 x 1,5	25	51,7	20	8	17	6	14	19	1,8 x 30°	6	14	1
KP03382308	B	8	M16 x 1,5	33	68	26	10	23	8	19	24	2,3 x 30°	15	35	1
KP03382410	B	10	M20 x 1,5	33	74	28	12	25	10	22	30	2,8 x 30°	15	34	1
KP03382412	B	12	M20 x 1,5	33	78	28	14	25	12	22	30	2,8 x 30°	15	39	1
KP03382516	B	16	M24 x 2	40	96	32	18	28	16	27	36	3,2 x 30°	20	46	1
KP03384903	D	3	M6 x 0,75	14	31,5	12	5	10	3,5	8	10	0,8 x 30°	4,5	10	1
KP03384004	D	4	M8 x 1	18	38,5	15	6	13	4	10	13	1 x 30°	6	12	1
KP03384105	D	5	M10 x 1	21	43,5	17	7	15	5	13	17	1,3 x 30°	5	12	1
KP03384206	D	6	M12 x 1,5	25	51,7	20	8	17	6	14	19	1,8 x 30°	6	14	1
KP03384308	D	8	M16 x 1,5	33	68	26	10	23	8	19	24	2,3 x 30°	15	35	1
KP03384410	D	10	M20 x 1,5	33	74	28	12	25	10	22	30	2,8 x 30°	15	34	1
KP03384412	D	12	M20 x 1,5	33	78	28	14	25	12	22	30	2,8 x 30°	15	39	1
KP03384516	D	16	M24 x 2	40	96	32	18	28	16	27	36	3,2 x 30°	20	46	1

TYPE A
non-lockout type
without lock nut

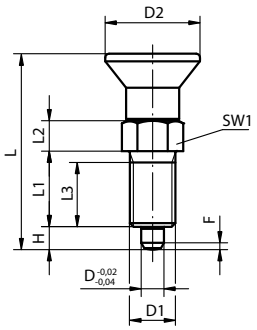

TYPE B
non-lockout type
with lock nut

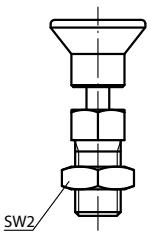

TYPE C
lockout type
without lock nut

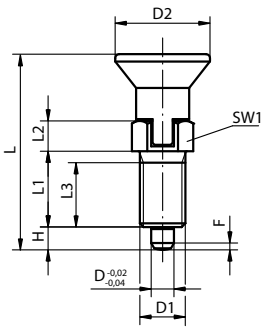

TYPE D
lockout type
with lock nut

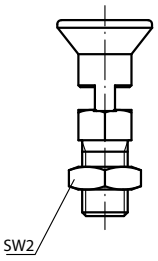

Tempered steel
MATERIAL - SURFACE TREATMENT
Body: Cl 5.8 (Steel) burnished
Indexing pin: Cl 5.8 (Steel) tempered, ground, burnished
Grip: TMP (Thermoplastic) blackish grey

Tempered stainless steel
MATERIAL - SURFACE TREATMENT
Body: AISI303 (Stainless steel)
Indexing pin: AISI420 (Stainless steel) tempered, ground
Grip: TMP (Thermoplastic) blackish grey

Untempered stainless steel
MATERIAL - SURFACE TREATMENT
Body: AISI303 (Stainless steel)
Indexing pin: AISI303 (Stainless steel) ground
Grip: TMP (Thermoplastic) blackish grey

NOTES
Indexing plungers are used to prevent any change in locking position due to lateral forces. A new locking position can only be set after the plunger has been manually disengaged. If the plunger has to stay disengaged, and to prevent the pin from unlocking, we recommend using from C/D.

ACCESSORIES
Spacing rings KP06659...

Stainless steel, tempered indexing pin

Code	Type	D	D1	D2	L	L1	L2	L3	H	SW1	SW2	F	Spring force initial pressure F1 (approx. N)	Spring force final pressure F2 (approx. N)	Package (pcs)
KP033801903	A	3	M6 x 0,75	14	31,5	12	5	10	3,5	8	-	0,8 x 30°	4,5	10	1
KP033801004	A	4	M8 x 1	18	38,5	15	6	13	4	10	-	1 x 30°	6	12	1
KP033801105	A	5	M10 x 1	21	43,5	17	7	15	5	13	-	1,3 x 30°	5	12	1
KP033801206	A	6	M12 x 1,5	25	51,7	20	8	17	6	14	-	1,8 x 30°	6	14	1
KP033801308	A	8	M16 x 1,5	33	68	26	10	23	8	19	-	2,3 x 30°	15	35	1
KP033801410	A	10	M20 x 1,5	33	74	28	12	25	10	22	-	2,8 x 30°	15	34	1
KP033801412	A	12	M20 x 1,5	33	78	28	14	25	12	22	-	2,8 x 30°	15	39	1
KP033801516	A	16	M24 x 2	40	96	32	18	28	16	27	-	3,2 x 30°	20	46	1
KP033803903	C	3	M6 x 0,75	14	31,5	12	5	10	3,5	8	-	0,8 x 30°	4,5	10	1
KP033803004	C	4	M8 x 1	18	38,5	15	6	13	4	10	-	1 x 30°	6	12	1
KP033803105	C	5	M10 x 1	21	43,5	17	7	15	5	13	-	1,3 x 30°	5	12	1
KP033803206	C	6	M12 x 1,5	25	51,7	20	8	17	6	14	-	1,8 x 30°	6	14	1
KP033803308	C	8	M16 x 1,5	33	68	26	10	23	8	19	-	2,3 x 30°	15	35	1
KP033803410	C	10	M20 x 1,5	33	74	28	12	25	10	22	-	2,8 x 30°	15	34	1
KP033803412	C	12	M20 x 1,5	33	78	28	14	25	12	22	-	2,8 x 30°	15	39	1
KP033803516	C	16	M24 x 2	40	96	32	18	28	16	27	-	3,2 x 30°	20	46	1
KP033802903	B	3	M6 x 0,75	14	31,5	12	5	10	3,5	8	10	0,8 x 30°	4,5	10	1
KP033802004	B	4	M8 x 1	18	38,5	15	6	13	4	10	13	1 x 30°	6	12	1
KP033802105	B	5	M10 x 1	21	43,5	17	7	15	5	13	17	1,3 x 30°	5	12	1
KP033802206	B	6	M12 x 1,5	25	51,7	20	8	17	6	14	19	1,8 x 30°	6	14	1
KP033802308	B	8	M16 x 1,5	33	68	26	10	23	8	19	24	2,3 x 30°	15	35	1
KP033802410	B	10	M20 x 1,5	33	74	28	12	25	10	22	30	2,8 x 30°	15	34	1
KP033802412	B	12	M20 x 1,5	33	78	28	14	25	12	22	30	2,8 x 30°	15	39	1
KP033802516	B	16	M24 x 2	40	96	32	18	28	16	27	36	3,2 x 30°	20	46	1
KP033804903	D	3	M6 x 0,75	14	31,5	12	5	10	3,5	8	10	0,8 x 30°	4,5	10	1
KP033804004	D	4	M8 x 1	18	38,5	15	6	13	4	10	13	1 x 30°	6	12	1
KP033804105	D	5	M10 x 1	21	43,5	17	7	15	5	13	17	1,3 x 30°	5	12	1
KP033804206	D	6	M12 x 1,5	25	51,7	20	8	17	6	14	19	1,8 x 30°	6	14	1
KP033804308	D	8	M16 x 1,5	33	68	26	10	23	8	19	24	2,3 x 30°	15	35	1
KP033804410	D	10	M20 x 1,5	33	74	28	12	25	10	22	30	2,8 x 30°	15	34	1
KP033804412	D	12	M20 x 1,5	33	78	28	14	25	12	22	30	2,8 x 30°	15	39	1
KP033804516	D	16	M24 x 2	40	96	32	18	28	16	27	36	3,2 x 30°	20	46	1

Tempered steel
MATERIAL - SURFACE TREATMENT
Body: Cl 5.8 (Steel) burnished
Indexing pin: Cl 5.8 (Steel) tempered, ground, burnished
Grip: TMP (Thermoplastic) blackish grey

Tempered stainless steel
MATERIAL - SURFACE TREATMENT
Body: AISI303 (Stainless steel)
Indexing pin: AISI420 (Stainless steel) tempered, ground
Grip: TMP (Thermoplastic) blackish grey

Untempered stainless steel
MATERIAL - SURFACE TREATMENT
Body: AISI303 (Stainless steel)
Indexing pin: AISI303 (Stainless steel) ground
Grip: TMP (Thermoplastic) blackish grey

NOTES
Indexing plungers are used to prevent any change in locking position due to lateral forces. A new locking position can only be set after the plunger has been manually disengaged. If the plunger has to stay disengaged, and to prevent the pin from unlocking, we recommend using from C/D.

ACCESSORIES
Spacing rings KP06659...

TYPE A
non-lockout type
without lock nut

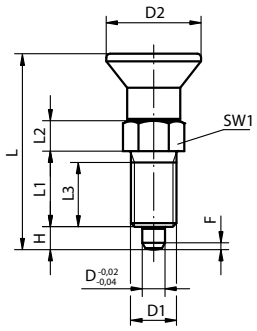

TYPE B
non-lockout type
with lock nut

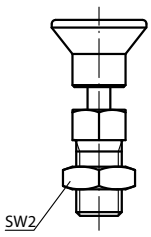

TYPE C
lockout type
without lock nut

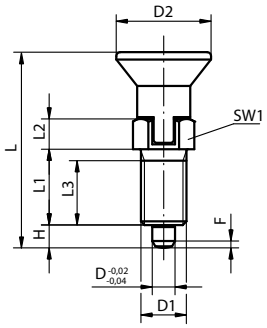

TYPE D
lockout type
with lock nut

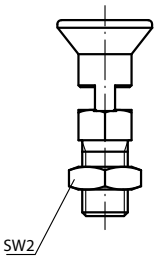

Stainless steel, untempered indexing pin

Code	Type	D	D1	D2	L	L1	L2	L3	H	SW1	SW2	F	Spring force initial pressure F1 (approx. N)	Spring force final pressure F2 (approx. N)	Package (pcs)
KP033811903	A	3	M6 x 0,75	14	31,5	12	5	10	3,5	8	-	0,8 x 30°	4,5	10	1
KP033811004	A	4	M8 x 1	18	38,5	15	6	13	4	10	-	1 x 30°	6	12	1
KP033811105	A	5	M10 x 1	21	43,5	17	7	15	5	13	-	1,3 x 30°	5	12	1
KP033811206	A	6	M12 x 1,5	25	51,7	20	8	17	6	14	-	1,8 x 30°	6	14	1
KP033811308	A	8	M16 x 1,5	33	68	26	10	23	8	19	-	2,3 x 30°	15	35	1
KP033811410	A	10	M20 x 1,5	33	74	28	12	25	10	22	-	2,8 x 30°	15	34	1
KP033811412	A	12	M20 x 1,5	33	78	28	14	25	12	22	-	2,8 x 30°	15	39	1
KP033811516	A	16	M24 x 2	40	96	32	18	28	16	27	-	3,2 x 30°	20	46	1
KP033813903	C	3	M6 x 0,75	14	31,5	12	5	10	3,5	8	-	0,8 x 30°	4,5	10	1
KP033813004	C	4	M8 x 1	18	38,5	15	6	13	4	10	-	1 x 30°	6	12	1
KP033813105	C	5	M10 x 1	21	43,5	17	7	15	5	13	-	1,3 x 30°	5	12	1
KP033813206	C	6	M12 x 1,5	25	51,7	20	8	17	6	14	-	1,8 x 30°	6	14	1
KP033813308	C	8	M16 x 1,5	33	68	26	10	23	8	19	-	2,3 x 30°	15	35	1
KP033813410	C	10	M20 x 1,5	33	74	28	12	25	10	22	-	2,8 x 30°	15	34	1
KP033813412	C	12	M20 x 1,5	33	78	28	14	25	12	22	-	2,8 x 30°	15	39	1
KP033813516	C	16	M24 x 2	40	96	32	18	28	16	27	-	3,2 x 30°	20	46	1
KP033812903	B	3	M6 x 0,75	14	31,5	12	5	10	3,5	8	10	0,8 x 30°	4,5	10	1
KP033812004	B	4	M8 x 1	18	38,5	15	6	13	4	10	13	1 x 30°	6	12	1
KP033812105	B	5	M10 x 1	21	43,5	17	7	15	5	13	17	1,3 x 30°	5	12	1
KP033812206	B	6	M12 x 1,5	25	51,7	20	8	17	6	14	19	1,8 x 30°	6	14	1
KP033812308	B	8	M16 x 1,5	33	68	26	10	23	8	19	24	2,3 x 30°	15	35	1
KP033812410	B	10	M20 x 1,5	33	74	28	12	25	10	22	30	2,8 x 30°	15	34	1
KP033812412	B	12	M20 x 1,5	33	78	28	14	25	12	22	30	2,8 x 30°	15	39	1
KP033812516	B	16	M24 x 2	40	96	32	18	28	16	27	36	3,2 x 30°	20	46	1
KP033814903	D	3	M6 x 0,75	14	31,5	12	5	10	3,5	8	10	0,8 x 30°	4,5	10	1
KP033814004	D	4	M8 x 1	18	38,5	15	6	13	4	10	13	1 x 30°	6	12	1
KP033814105	D	5	M10 x 1	21	43,5	17	7	15	5	13	17	1,3 x 30°	5	12	1
KP033814206	D	6	M12 x 1,5	25	51,7	20	8	17	6	14	19	1,8 x 30°	6	14	1
KP033814308	D	8	M16 x 1,5	33	68	26	10	23	8	19	24	2,3 x 30°	15	35	1
KP033814410	D	10	M20 x 1,5	33	74	28	12	25	10	22	30	2,8 x 30°	15	34	1
KP033814412	D	12	M20 x 1,5	33	78	28	14	25	12	22	30	2,8 x 30°	15	39	1
KP033814516	D	16	M24 x 2	40	96	32	18	28	16	27	36	3,2 x 30°	20	46	1

INDEXING PLUNGER
stainless steel

TYPE A
non-lockout type
without lock nut

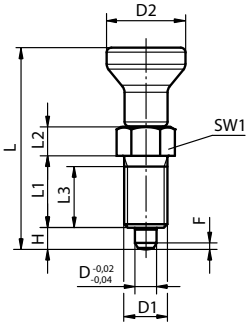

TYPE B
non-lockout type
with lock nut

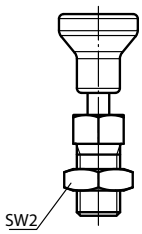

TYPE C
lockout type
without lock nut

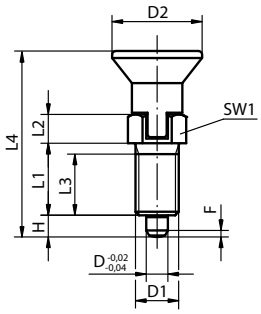

TYPE D
lockout type
with lock nut

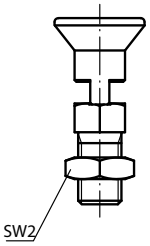

Tempered stainless steel
MATERIAL - SURFACE TREATMENT
Body: AISI303 (Stainless steel)
Indexing pin: AISI420 (Stainless steel) tempered
Grip: AISI303 (Stainless steel) electrolytic polishing

Tempered stainless steel
MATERIAL - SURFACE TREATMENT
Body: AISI303 (Stainless steel)
Indexing pin: AISI303 (Stainless steel)
Grip: AISI303 (Stainless steel) electrolytic polishing

ACCESSORIES
Spacing rings KP06659...

Steel, tempered indexing pin

Code	Type	D	D1	D2	L	L1	L2	L3	L4	H	SW1	SW2	F	Spring force initial pressure F1 (approx. N)	Spring force final pressure F2 (approx. N)	Package (pcs)
KP0632001903	A	3	M6 x 0,75	14	34,5	12	5	10	-	3,5	8	-	0,8 x 30°	4,5	10	1
KP0632001004	A	4	M8 x 1	18	43	15	6	13	-	4	10	-	1 x 30°	6	12	1
KP0632001105	A	5	M10 x 1	21	50	17	7	15	-	5	13	-	1,3 x 30°	5	12	1
KP0632001206	A	6	M12 x 1,5	25	59	20	8	17	-	6	14	-	1,8 x 30°	6	14	1
KP0632001308	A	8	M16 x 1,5	33	77	26	10	23	-	8	19	-	2,3 x 30°	15	35	1
KP0632001410	A	10	M20 x 1,5	33	83	28	12	25	-	10	22	-	2,8 x 30°	15	34	1
KP0632001412	A	12	M20 x 1,5	33	87	28	14	25	-	12	22	-	2,8 x 30°	15	39	1
KP0632001516	A	16	M24 x 2	40	106	32	18	28	-	16	27	-	3,2 x 30°	20	46	1
KP0632002903	B	3	M6 x 0,75	14	34,5	12	5	10	-	3,5	8	10	0,8 x 30°	4,5	10	1
KP0632002004	B	4	M8 x 1	18	43	15	6	13	-	4	10	13	1 x 30°	6	12	1
KP0632002105	B	5	M10 x 1	21	50	17	7	15	-	5	13	17	1,3 x 30°	5	12	1
KP0632002206	B	6	M12 x 1,5	25	59	20	8	17	-	6	14	19	1,8 x 30°	6	14	1
KP0632002308	B	8	M16 x 1,5	33	77	26	10	23	-	8	19	24	2,3 x 30°	15	35	1
KP0632002410	B	10	M20 x 1,5	33	83	28	12	25	-	10	22	30	2,8 x 30°	15	34	1
KP0632002412	B	12	M20 x 1,5	33	87	28	14	25	-	12	22	30	2,8 x 30°	15	39	1
KP0632002516	B	16	M24 x 2	40	106	32	18	28	-	16	27	36	3,2 x 30°	20	46	1
KP0632003903	C	3	M6 x 0,75	14	-	12	5	10	31,5	3,5	8	-	0,8 x 30°	4,5	10	1
KP0632003004	C	4	M8 x 1	18	-	15	6	13	38,5	4	10	-	1 x 30°	6	12	1
KP0632003105	C	5	M10 x 1	21	-	17	7	15	43,5	5	13	-	1,3 x 30°	5	12	1
KP0632003206	C	6	M12 x 1,5	25	-	20	8	17	51,7	6	14	-	1,8 x 30°	6	14	1
KP0632003308	C	8	M16 x 1,5	33	-	26	10	23	68	8	19	-	2,3 x 30°	15	35	1
KP0632003410	C	10	M20 x 1,5	33	-	28	12	25	74	10	22	-	2,8 x 30°	15	34	1
KP0632003412	C	12	M20 x 1,5	33	-	28	14	25	78	12	22	-	2,8 x 30°	15	39	1
KP0632003516	C	16	M24 x 2	40	-	32	18	28	96	16	27	-	3,2 x 30°	20	46	1
KP0632004903	D	3	M6 x 0,75	14	-	12	5	10	31,5	3,5	8	10	0,8 x 30°	4,5	10	1
KP0632004004	D	4	M8 x 1	18	-	15	6	13	38,5	4	10	13	1 x 30°	6	12	1
KP0632004105	D	5	M10 x 1	21	-	17	7	15	43,5	5	13	17	1,3 x 30°	5	12	1
KP0632004206	D	6	M12 x 1,5	25	-	20	8	17	51,7	6	14	19	1,8 x 30°	6	14	1
KP0632004308	D	8	M16 x 1,5	33	-	26	10	23	68	8	19	24	2,3 x 30°	15	35	1
KP0632004410	D	10	M20 x 1,5	33	-	28	12	25	74	10	22	30	2,8 x 30°	15	34	1
KP0632004412	D	12	M20 x 1,5	33	-	28	14	25	78	12	22	30	2,8 x 30°	15	39	1
KP0632004516	D	16	M24 x 2	40	-	32	18	28	96	16	27	36	3,2 x 30°	20	46	1

Tempered stainless steel
MATERIAL - SURFACE TREATMENT
Body: AISI303 (Stainless steel)
Indexing pin: AISI420 (Stainless steel) tempered
Grip: AISI303 (Stainless steel) electrolytic polishing

Tempered stainless steel
MATERIAL - SURFACE TREATMENT
Body: AISI303 (Stainless steel)
Indexing pin: AISI303 (Stainless steel)
Grip: AISI303 (Stainless steel) electrolytic polishing

ACCESSORIES
Spacing rings KP06659...

TYPE A
non-lockout type
without lock nut

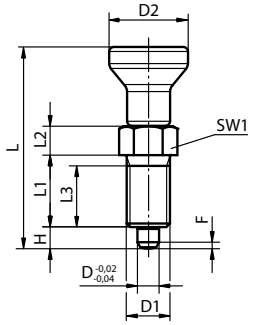

TYPE B
non-lockout type
with lock nut

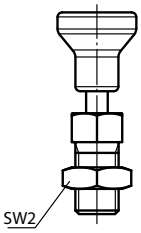

TYPE C
lockout type
without lock nut

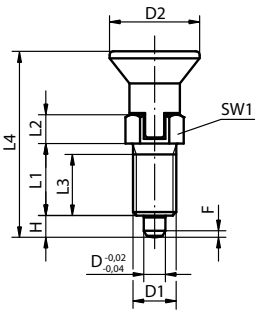

TYPE D
lockout type
with lock nut

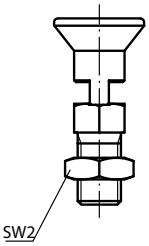

Untempered indexing pin

Code	Type	D	D1	D2	L	L1	L2	L3	L4	H	SW1	SW2	F	Spring force initial pressure F1 (approx. N)	Spring force final pressure F2 (approx. N)	Package (pcs)
KP0632111903	A	3	M6 x 0,75	14	34,5	12	5	10	-	3,5	8	-	0,8 x 30°	4,5	10	1
KP0632111004	A	4	M8 x 1	18	43	15	6	13	-	4	10	-	1 x 30°	6	12	1
KP0632111105	A	5	M10 x 1	21	50	17	7	15	-	5	13	-	1,3 x 30°	5	12	1
KP0632111206	A	6	M12 x 1,5	25	59	20	8	17	-	6	14	-	1,8 x 30°	6	14	1
KP0632111308	A	8	M16 x 1,5	33	77	26	10	23	-	8	19	-	2,3 x 30°	15	35	1
KP0632111410	A	10	M20 x 1,5	33	83	28	12	25	-	10	22	-	2,8 x 30°	15	34	1
KP0632111412	A	12	M20 x 1,5	33	87	28	14	25	-	12	22	-	2,8 x 30°	15	39	1
KP0632111516	A	16	M24 x 2	40	106	32	18	28	-	16	27	-	3,2 x 30°	20	46	1
KP0632112903	B	3	M6 x 0,75	14	34,5	12	5	10	-	3,5	8	10	0,8 x 30°	4,5	10	1
KP0632112004	B	4	M8 x 1	18	43	15	6	13	-	4	10	13	1 x 30°	6	12	1
KP0632112105	B	5	M10 x 1	21	50	17	7	15	-	5	13	17	1,3 x 30°	5	12	1
KP0632112206	B	6	M12 x 1,5	25	59	20	8	17	-	6	14	19	1,8 x 30°	6	14	1
KP0632112308	B	8	M16 x 1,5	33	77	26	10	23	-	8	19	24	2,3 x 30°	15	35	1
KP0632112410	B	10	M20 x 1,5	33	83	28	12	25	-	10	22	30	2,8 x 30°	15	34	1
KP0632112412	B	12	M20 x 1,5	33	87	28	14	25	-	12	22	30	2,8 x 30°	15	39	1
KP0632112516	B	16	M24 x 2	40	106	32	18	28	-	16	27	36	3,2 x 30°	20	46	1
KP0632113903	C	3	M6 x 0,75	14	-	12	5	10	31,5	3,5	8	-	0,8 x 30°	4,5	10	1
KP0632113004	C	4	M8 x 1	18	-	15	6	13	38,5	4	10	-	1 x 30°	6	12	1
KP0632113105	C	5	M10 x 1	21	-	17	7	15	43,5	5	13	-	1,3 x 30°	5	12	1
KP0632113206	C	6	M12 x 1,5	25	-	20	8	17	51,7	6	14	-	1,8 x 30°	6	14	1
KP0632113308	C	8	M16 x 1,5	33	-	26	10	23	68	8	19	-	2,3 x 30°	15	35	1
KP0632113410	C	10	M20 x 1,5	33	-	28	12	25	74	10	22	-	2,8 x 30°	15	34	1
KP0632113412	C	12	M20 x 1,5	33	-	28	14	25	78	12	22	-	2,8 x 30°	15	39	1
KP0632113516	C	16	M24 x 2	40	-	32	18	28	96	16	27	-	3,2 x 30°	20	46	1
KP0632114903	D	3	M6 x 0,75	14	-	12	5	10	31,5	3,5	8	10	0,8 x 30°	4,5	10	1
KP0632114004	D	4	M8 x 1	18	-	15	6	13	38,5	4	10	13	1 x 30°	6	12	1
KP0632114105	D	5	M10 x 1	21	-	17	7	15	43,5	5	13	17	1,3 x 30°	5	12	1
KP0632114206	D	6	M12 x 1,5	25	-	20	8	17	51,7	6	14	19	1,8 x 30°	6	14	1
KP0632114308	D	8	M16 x 1,5	33	-	26	10	23	68	8	19	24	2,3 x 30°	15	35	1
KP0632114410	D	10	M20 x 1,5	33	-	28	12	25	74	10	22	30	2,8 x 30°	15	34	1
KP0632114412	D	12	M20 x 1,5	33	-	28	14	25	78	12	22	30	2,8 x 30°	15	39	1
KP0632114516	D	16	M24 x 2	40	-	32	18	28	96	16	27	36	3,2 x 30°	20	46	1

INDEXING PLUNGER
short type

Steel
MATERIAL - SURFACE TREATMENT
Body: Cl 5.8 (Steel) burnished
Indexing pin: Cl 5.8 (Steel) tempered, ground and burnished
Grip: TMP (Thermoplastic) blackish grey

Stainless steel
MATERIAL - SURFACE TREATMENT
Body: AISI303 (Stainless steel)
Indexing pin: AISI303 (Stainless steel) ground
Grip: TMP (Thermoplastic) blackish grey

ACCESSORIES
Spacing rings KP06659...

TYPE A
non-lockout type
without lock nut

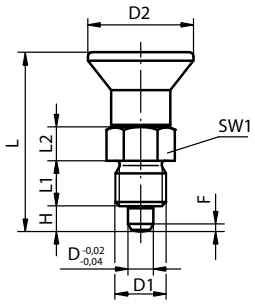

TYPE B
non-lockout type
with lock nut

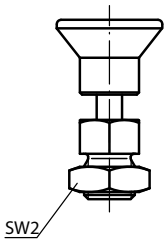

TYPE C
lockout type
without lock nut

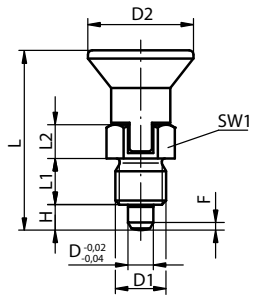

TYPE D
lockout type
with lock nut

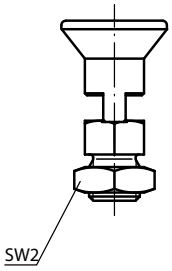

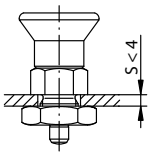

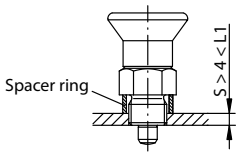

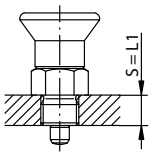

Steel, tempered indexing pin

Code	Type	D	D1	D2	L	L1	L2	H	SW1	SW2	F	Spring force initial pressure F1 (approx. N)	Spring force final pressure F2 (approx. N)	Package (pcs)
KP06315903	A	3	M6 x 0,75	14	25,5	6	5	3,5	8	-	0,8 x 30°	4	10	1
KP06315004	A	4	M8 x 1	18	29,5	6	6	4	10	-	1 x 30°	4	12	1
KP06315105	A	5	M10 x 1	21	34,5	8	7	5	13	-	1,3 x 30°	5	12	1
KP06315206	A	6	M12 x 1,5	25	41,7	10	8	6	14	-	1,8 x 30°	6	14	1
KP06315308	A	8	M16 x 1,5	33	54	12	10	8	19	-	2,3 x 30°	14	28	1
KP06315410	A	10	M20 x 1,5	33	61	15	12	10	22	-	2,8 x 30°	15	32	1
KP06317903	C	3	M6 x 0,75	14	25,5	6	5	3,5	8	-	0,8 x 30°	4	10	1
KP06317004	C	4	M8 x 1	18	29,5	6	6	4	10	-	1 x 30°	4	12	1
KP06317105	C	5	M10 x 1	21	34,5	8	7	5	13	-	1,3 x 30°	5	12	1
KP06317206	C	6	M12 x 1,5	25	41,7	10	8	6	14	-	1,8 x 30°	6	14	1
KP06317308	C	8	M16 x 1,5	33	54	12	10	8	19	-	2,3 x 30°	14	28	1
KP06317410	C	10	M20 x 1,5	33	61	15	12	10	22	-	2,8 x 30°	15	32	1
KP06316903	B	3	M6 x 0,75	14	25,5	6	5	3,5	8	10	0,8 x 30°	4	10	1
KP06316004	B	4	M8 x 1	18	29,5	6	6	4	10	13	1 x 30°	4	12	1
KP06316105	B	5	M10 x 1	21	34,5	8	7	5	13	17	1,3 x 30°	5	12	1
KP06316206	B	6	M12 x 1,5	25	41,7	10	8	6	14	19	1,8 x 30°	6	14	1
KP06316308	B	8	M16 x 1,5	33	54	12	10	8	19	24	2,3 x 30°	14	28	1
KP06316410	B	10	M20 x 1,5	33	61	15	12	10	22	30	2,8 x 30°	15	32	1
KP06318903	D	3	M6 x 0,75	14	25,5	6	5	3,5	8	10	0,8 x 30°	4	10	1
KP06318004	D	4	M8 x 1	18	29,5	6	6	4	10	13	1 x 30°	4	12	1
KP06318105	D	5	M10 x 1	21	34,5	8	7	5	13	17	1,3 x 30°	5	12	1
KP06318206	D	6	M12 x 1,5	25	41,7	10	8	6	14	19	1,8 x 30°	6	14	1
KP06318308	D	8	M16 x 1,5	33	54	12	10	8	19	24	2,3 x 30°	14	28	1
KP06318410	D	10	M20 x 1,5	33	61	15	12	10	22	30	2,8 x 30°	15	32	1

Steel
MATERIAL - SURFACE TREATMENT
Body: Cl 5.8 (Steel) burnished
Indexing pin: Cl 5.8 (Steel)
tempered, ground and burnished
Grip: TMP (Thermoplastic) blackish grey

Stainless steel
MATERIAL - SURFACE TREATMENT
Body: AISI303 (Stainless steel)
Indexing pin: AISI303 (Stainless steel) ground
Grip: TMP (Thermoplastic) blackish grey

ACCESSORIES
Spacing rings KP06659...

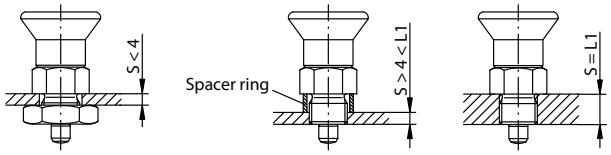

TYPE A
non-lockout type
without lock nut

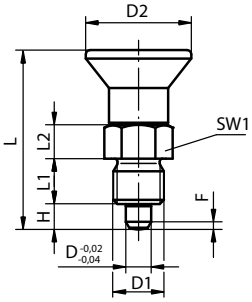

TYPE B
non-lockout type
with lock nut

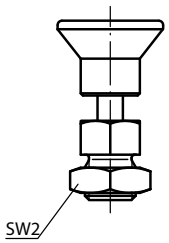

TYPE C
lockout type
without lock nut

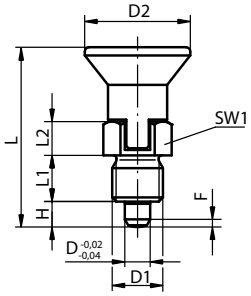

TYPE D
lockout type
with lock nut

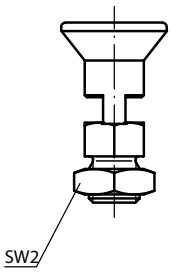

Stainless steel, untempered indexing pin

Code	Type	D	D1	D2	L	L1	L2	H	SW1	SW2	F	Spring force initial pressure F1 (approx. N)	Spring force final pressure F2 (approx. N)	Package (pcs)
KP063115903	A	3	M6 x 0,75	14	25,5	6	5	3,5	8	10	-	4	10	1
KP063115004	A	4	M8 x 1	18	29,5	6	6	4	10	13	-	4	12	1
KP063115105	A	5	M10 x 1	21	34,5	8	7	5	13	17	-	5	12	1
KP063115206	A	6	M12 x 1,5	25	41,7	10	8	6	14	19	-	6	14	1
KP063115308	A	8	M16 x 1,5	33	54	12	10	8	19	24	-	14	28	1
KP063115410	A	10	M20 x 1,5	33	61	15	12	10	22	30	-	15	32	1
KP063117903	C	3	M6 x 0,75	14	25,5	6	5	3,5	8	10	-	4	10	1
KP063117004	C	4	M8 x 1	18	29,5	6	6	4	10	13	-	4	12	1
KP063117105	C	5	M10 x 1	21	34,5	8	7	5	13	17	-	5	12	1
KP063117206	C	6	M12 x 1,5	25	41,7	10	8	6	14	19	-	6	14	1
KP063117308	C	8	M16 x 1,5	33	54	12	10	8	19	24	-	14	28	1
KP063117410	C	10	M20 x 1,5	33	61	15	12	10	22	30	-	15	32	1
KP063116903	B	3	M6 x 0,75	14	25,5	6	5	3,5	8	10	0,8 x 30°	4	10	1
KP063116004	B	4	M8 x 1	18	29,5	6	6	4	10	13	1 x 30°	4	12	1
KP063116105	B	5	M10 x 1	21	34,5	8	7	5	13	17	1,3 x 30°	5	12	1
KP063116206	B	6	M12 x 1,5	25	41,7	10	8	6	14	19	1,8 x 30°	6	14	1
KP063116308	B	8	M16 x 1,5	33	54	12	10	8	19	24	2,3 x 30°	14	28	1
KP063116410	B	10	M20 x 1,5	33	61	15	12	10	22	30	2,8 x 30°	15	32	1
KP063118903	D	3	M6 x 0,75	14	25,5	6	5	3,5	8	10	0,8 x 30°	4	10	1
KP063118004	D	4	M8 x 1	18	29,5	6	6	4	10	13	1 x 30°	4	12	1
KP063118105	D	5	M10 x 1	21	34,5	8	7	5	13	17	1,3 x 30°	5	12	1
KP063118206	D	6	M12 x 1,5	25	41,7	10	8	6	14	19	1,8 x 30°	6	14	1
KP063118308	D	8	M16 x 1,5	33	54	12	10	8	19	24	2,3 x 30°	14	28	1
KP063118410	D	10	M20 x 1,5	33	61	15	12	10	22	30	2,8 x 30°	15	32	1

INDEXING PLUNGER
with extended indexing pin

Tempered steel
MATERIAL - SURFACE TREATMENT
Body: Cl 5.8 (Steel) burnished
Indexing pin: Cl 5.8 (Steel) tempered, ground and burnished
Grip: TMP (Thermoplastic) blackish grey

Tempered stainless steel
MATERIAL - SURFACE TREATMENT
Body: AISI303 (Stainless steel)
Indexing pin: AISI420 (Stainless steel) tempered, ground
Grip: TMP (Thermoplastic) blackish grey

Untempered stainless steel
MATERIAL - SURFACE TREATMENT
Body: AISI303 (Stainless steel)
Indexing pin: AISI303 (Stainless steel) ground
Grip: TMP (Thermoplastic) blackish grey

ACCESSORIES
Spacing rings KP06659...

TYPE A
non-lockout type
without lock nut

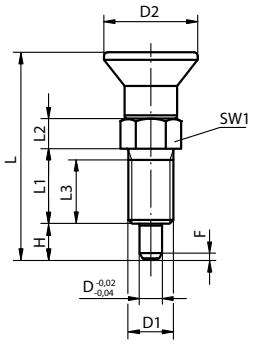

TYPE B
non-lockout type
with lock nut

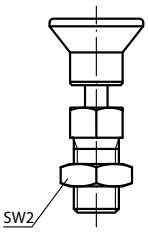

TYPE C
lockout type
without lock nut

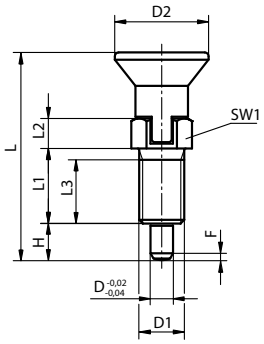

TYPE D
lockout type
with lock nut

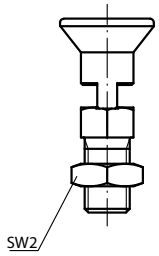

Steel, tempered indexing pin

Code	Type	D	D1	D2	L	L1	L2	L3	H	SW1	SW2	F	Spring force initial pressure F1 (approx. N)	Spring force final pressure F2 (approx. N)	Package (pcs)
KP063021903	A	3	M6 x 0,75	14	33	12	5	10	5	8	-	0,8 x 30°	4,5	12	1
KP063021004	A	4	M8 x 1	18	40,5	15	6	13	6	10	-	1 x 30°	6	15	1
KP063021105	A	5	M10 x 1	21	46,5	17	7	15	8	13	-	1,3 x 30°	5	16	1
KP063021206	A	6	M12 x 1,5	25	54,7	20	8	17	9	14	-	1,8 x 30°	6	18	1
KP063021308	A	8	M16 x 1,5	33	72	26	10	23	12	19	-	2,3 x 30°	15	45	1
KP063021410	A	10	M20 x 1,5	33	79	28	12	25	15	22	-	2,8 x 30°	15	43	1
KP063021412	A	12	M20 x 1,5	33	84	28	14	25	18	22	-	2,8 x 30°	15	51	1
KP063021516	A	16	M24 x 2	40	104	32	18	28	24	27	-	3,2 x 30°	20	60	1
KP063022903	B	3	M6 x 0,75	14	33	12	5	10	5	8	10	0,8 x 30°	4,5	12	1
KP063022004	B	4	M8 x 1	18	40,5	15	6	13	6	10	13	1 x 30°	6	15	1
KP063022105	B	5	M10 x 1	21	46,5	17	7	15	8	13	17	1,3 x 30°	5	16	1
KP063022206	B	6	M12 x 1,5	25	54,7	20	8	17	9	14	19	1,8 x 30°	6	18	1
KP063022308	B	8	M16 x 1,5	33	72	26	10	23	12	19	24	2,3 x 30°	15	45	1
KP063022410	B	10	M20 x 1,5	33	79	28	12	25	15	22	30	2,8 x 30°	15	43	1
KP063022412	B	12	M20 x 1,5	33	84	28	14	25	18	22	30	2,8 x 30°	15	51	1
KP063022516	B	16	M24 x 2	40	104	32	18	28	24	27	36	3,2 x 30°	20	60	1
KP063023105	C	5	M10 x 1	21	49,5	17	10	15	8	13	-	1,3 x 30°	5	16	1
KP063023206	C	6	M12 x 1,5	25	57,7	20	11	17	9	14	-	1,8 x 30°	6	18	1
KP063023308	C	8	M16 x 1,5	33	76	26	14	23	12	19	-	2,3 x 30°	15	45	1
KP063024105	D	5	M10 x 1	21	49,5	17	10	15	8	13	17	1,3 x 30°	5	16	1
KP063024206	D	6	M12 x 1,5	25	57,7	20	11	17	9	14	19	1,8 x 30°	6	18	1
KP063024308	D	8	M16 x 1,5	33	76	26	14	23	12	19	24	2,3 x 30°	15	45	1

Tempered steel
MATERIAL - SURFACE TREATMENT
Body: Cl 5.8 (Steel) burnished
Indexing pin: Cl 5.8 (Steel) tempered, ground and burnished
Grip: TMP (Thermoplastic) blackish grey

Tempered stainless steel
MATERIAL - SURFACE TREATMENT
Body: AISI303 (Stainless steel)
Indexing pin: AISI420 (Stainless steel) tempered, ground
Grip: TMP (Thermoplastic) blackish grey

Untempered stainless steel
MATERIAL - SURFACE TREATMENT
Body: AISI303 (Stainless steel)
Indexing pin: AISI303 (Stainless steel) ground
Grip: TMP (Thermoplastic) blackish grey

ACCESSORIES
Spacing rings KP06659...

TYPE A
non-lockout type
without lock nut

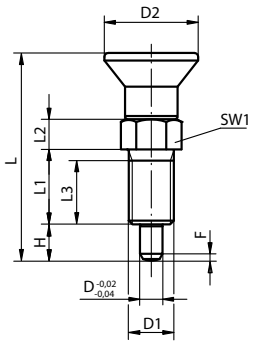

TYPE B
non-lockout type
with lock nut

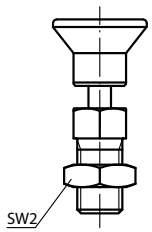

TYPE C
lockout type
without lock nut

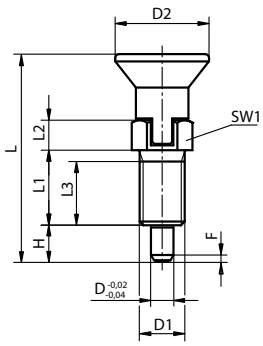

TYPE D
lockout type
with lock nut

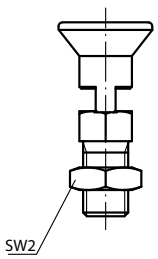

Stainless steel, tempered indexing pin

Code	Type	D	D1	D2	L	L1	L2	L3	H	SW1	SW2	F	Spring force initial pressure F1 (approx. N)	Spring force final pressure F2 (approx. N)	Package (pcs)
KP0630201903	A	3	M6 x 0,75	14	33	12	5	10	5	8	-	0,8 x 30°	4,5	12	1
KP0630201004	A	4	M8 x 1	18	40,5	15	6	13	6	10	-	1 x 30°	6	15	1
KP0630201105	A	5	M10 x 1	21	46,5	17	7	15	8	13	-	1,3 x 30°	5	16	1
KP0630201206	A	6	M12 x 1,5	25	54,7	20	8	17	9	14	-	1,8 x 30°	6	18	1
KP0630201308	A	8	M16 x 1,5	33	72	26	10	23	12	19	-	2,3 x 30°	15	45	1
KP0630201410	A	10	M20 x 1,5	33	79	28	12	25	15	22	-	2,8 x 30°	15	43	1
KP0630201412	A	12	M20 x 1,5	33	84	28	14	25	18	22	-	2,8 x 30°	15	51	1
KP0630201516	A	16	M24 x 2	40	104	32	18	28	24	27	-	3,2 x 30°	20	60	1
KP0630202903	B	3	M6 x 0,75	14	33	12	5	10	5	8	10	0,8 x 30°	4,5	12	1
KP0630202004	B	4	M8 x 1	18	40,5	15	6	13	6	10	13	1 x 30°	6	15	1
KP0630202105	B	5	M10 x 1	21	46,5	17	7	15	8	13	17	1,3 x 30°	5	16	1
KP0630202206	B	6	M12 x 1,5	25	54,7	20	8	17	9	14	19	1,8 x 30°	6	18	1
KP0630202308	B	8	M16 x 1,5	33	72	26	10	23	12	19	24	2,3 x 30°	15	45	1
KP0630202410	B	10	M20 x 1,5	33	79	28	12	25	15	22	30	2,8 x 30°	15	43	1
KP0630202412	B	12	M20 x 1,5	33	84	28	14	25	18	22	30	2,8 x 30°	15	51	1
KP0630202516	B	16	M24 x 2	40	104	32	18	28	24	27	36	3,2 x 30°	20	60	1
KP0630203105	C	5	M10 x 1	21	49,5	17	10	15	8	13	-	1,3 x 30°	5	16	1
KP0630203206	C	6	M12 x 1,5	25	57,7	20	11	17	9	14	-	1,8 x 30°	6	18	1
KP0630203308	C	8	M16 x 1,5	33	76	26	14	23	12	19	-	2,3 x 30°	15	45	1
KP0630204105	D	5	M10 x 1	21	49,5	17	10	15	8	13	17	1,3 x 30°	5	16	1
KP0630204206	D	6	M12 x 1,5	25	57,7	20	11	17	9	14	19	1,8 x 30°	6	18	1
KP0630204308	D	8	M16 x 1,5	33	76	26	14	23	12	19	24	2,3 x 30°	15	45	1

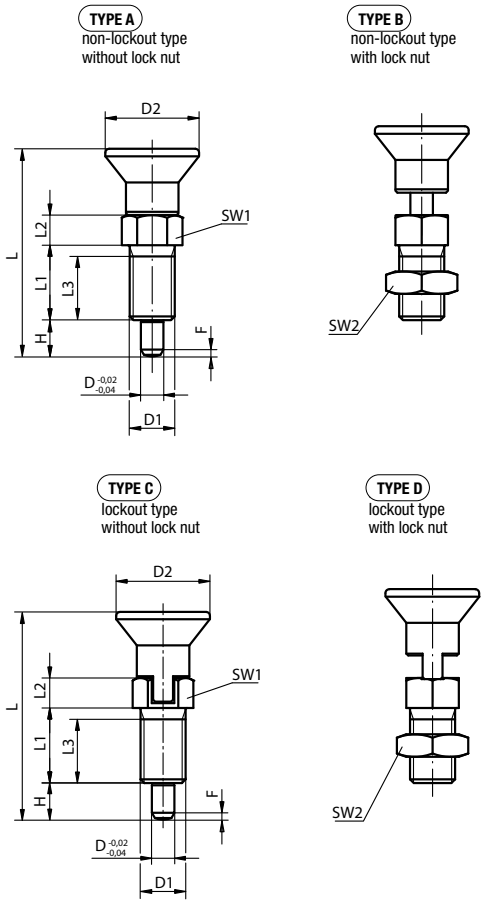

Tempered steel
MATERIAL - SURFACE TREATMENT
Body: Cl 5.8 (Steel) burnished
Indexing pin: Cl 5.8 (Steel) tempered, ground and burnished
Grip: TMP (Thermoplastic) blackish grey

Tempered stainless steel
MATERIAL - SURFACE TREATMENT
Body: AISI303 (Stainless steel)
Indexing pin: AISI420 (Stainless steel) tempered, ground
Grip: TMP (Thermoplastic) blackish grey

Untempered stainless steel
MATERIAL - SURFACE TREATMENT
Body: AISI303 (Stainless steel)
Indexing pin: AISI303 (Stainless steel) ground
Grip: TMP (Thermoplastic) blackish grey

ACCESSORIES
Spacing rings KP06659...

Stainless steel, untempered indexing pin

Code	Type	D	D1	D2	L	L1	L2	L3	H	SW1	SW2	F	Spring force initial pressure F1 (approx. N)	Spring force final pressure F2 (approx. N)	Package (pcs)
KP0630211903	A	3	M6 x 0,75	14	33	12	5	10	5	8	-	0,8 x 30°	4,5	12	1
KP0630211004	A	4	M8 x 1	18	40,5	15	6	13	6	10	-	1 x 30°	6	15	1
KP0630211105	A	5	M10 x 1	21	46,5	17	7	15	8	13	-	1,3 x 30°	5	16	1
KP0630211206	A	6	M12 x 1,5	25	54,7	20	8	17	9	14	-	1,8 x 30°	6	18	1
KP0630211308	A	8	M16 x 1,5	33	72	26	10	23	12	19	-	2,3 x 30°	15	45	1
KP0630211410	A	10	M20 x 1,5	33	79	28	12	25	15	22	-	2,8 x 30°	15	43	1
KP0630211412	A	12	M20 x 1,5	33	84	28	14	25	18	22	-	2,8 x 30°	15	51	1
KP0630211516	A	16	M24 x 2	40	104	32	18	28	24	27	-	3,2 x 30°	20	60	1
KP0630212903	B	3	M6 x 0,75	14	33	12	5	10	5	8	10	0,8 x 30°	4,5	12	1
KP0630212004	B	4	M8 x 1	18	40,5	15	6	13	6	10	13	1 x 30°	6	15	1
KP0630212105	B	5	M10 x 1	21	46,5	17	7	15	8	13	17	1,3 x 30°	5	16	1
KP0630212206	B	6	M12 x 1,5	25	54,7	20	8	17	9	14	19	1,8 x 30°	6	18	1
KP0630212308	B	8	M16 x 1,5	33	72	26	10	23	12	19	24	2,3 x 30°	15	45	1
KP0630212410	B	10	M20 x 1,5	33	79	28	12	25	15	22	30	2,8 x 30°	15	43	1
KP0630212412	B	12	M20 x 1,5	33	84	28	14	25	18	22	30	2,8 x 30°	15	51	1
KP0630212516	B	16	M24 x 2	40	104	32	18	28	24	27	36	3,2 x 30°	20	60	1
KP0630213105	C	5	M10 x 1	21	49,5	17	10	15	8	13	-	1,3 x 30°	5	16	1
KP0630213206	C	6	M12 x 1,5	25	57,7	20	11	17	9	14	-	1,8 x 30°	6	18	1
KP0630213308	C	8	M16 x 1,5	33	76	26	14	23	12	19	-	2,3 x 30°	15	45	1
KP0630214105	D	5	M10 x 1	21	49,5	17	10	15	8	13	17	1,3 x 30°	5	16	1
KP0630214206	D	6	M12 x 1,5	25	57,7	20	11	17	9	14	19	1,8 x 30°	6	18	1
KP0630214308	D	8	M16 x 1,5	33	76	26	14	23	12	19	24	2,3 x 30°	15	45	1

Steel
MATERIAL - SURFACE TREATMENT
Body: 11SMnPb30 (Steel) burnished
Indexing pin: 11SMnPb30 (Steel) tempered, ground, burnished
Grip: TMP (Thermoplastic)

Stainless steel
MATERIAL - SURFACE TREATMENT
Body: AISI303 (Stainless steel)
Indexing pin: AISI420 (Stainless steel) tempered, ground
Grip: TMP (Thermoplastic)

COLOUR
Grip: GN Blackish grey
R2 Red RAL 3020

ACCESSORIES
Spacing rings KP06659...

TYPE A
without lock nut

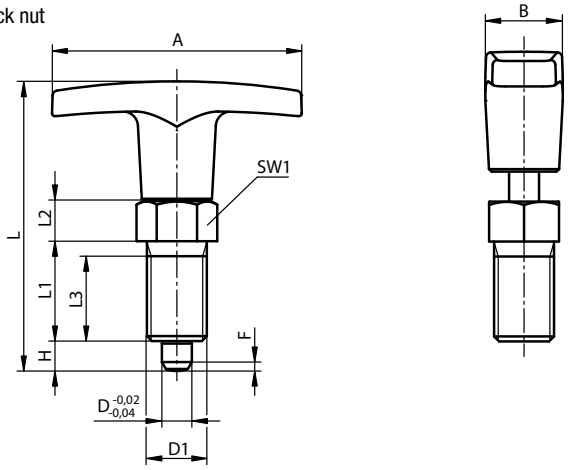

TYPE B
with lock nut

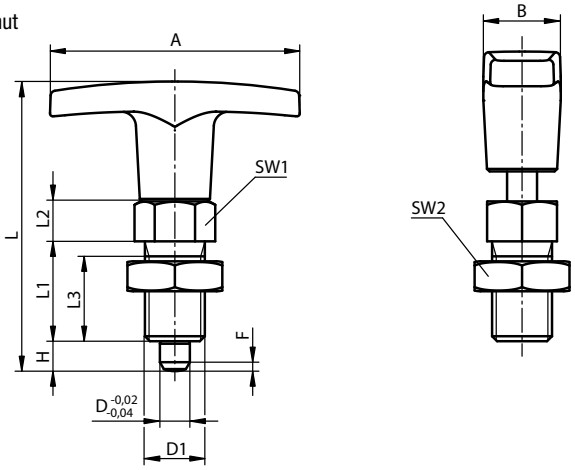

Steel, tempered indexing pin

Code GN	Code R2	Type	A	B	D	D1	L	L1	L2	L3	H	SW1	SW2	F	Spring force initial pressure F1 (approx. N)	Spring force final pressure F2 (approx. N)	Package (pcs)
KP11245206	**KP1124520684**	A	50	15,5	6	M12 x 1,5	58	20	8	17	6	14	-	1,8 x 30°	6	14	1
KP11245308	**KP1124530884**	A	60	18	9	M16 x 1,5	77	26	10	23	8	19	-	2,3 x 30°	15	35	1
KP11245410	**KP1124541084**	A	72	19	10	M20 x 1,5	84	28	12	25	10	22	-	2,8 x 30°	15	34	1
KP11246206	**KP1124620684**	B	50	15,5	6	M12 x 1,5	58	20	8	17	6	14	19	1,8 x 30°	6	14	1
KP11246308	**KP1124630884**	B	60	18	9	M16 x 1,5	77	26	10	23	8	19	24	2,3 x 30°	15	35	1
KP11246410	**KP1124641084**	B	72	19	10	M20 x 1,5	84	28	12	25	10	22	30	2,8 x 30°	15	34	1

Steel
MATERIAL - SURFACE TREATMENT
Body: 11SMnPb30 (Steel) burnished
Indexing pin: 11SMnPb30 (Steel) tempered, ground, burnished
Grip: TMP (Thermoplastic)

Stainless steel
MATERIAL - SURFACE TREATMENT
Body: AISI303 (Stainless steel)
Indexing pin: AISI420 (Stainless steel) tempered, ground
Grip: TMP (Thermoplastic)

COLOUR
Grip: GN Blackish grey
R2 Red RAL 3020

ACCESSORIES
Spacing rings KP06659...

TYPE A
without lock nut

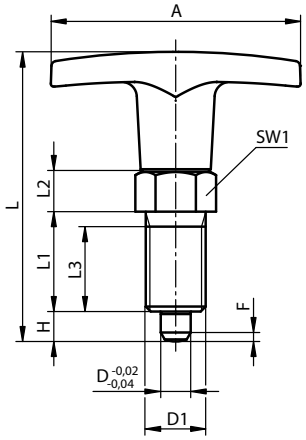

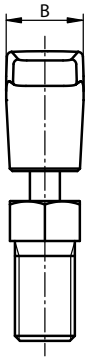

TYPE B
with lock nut

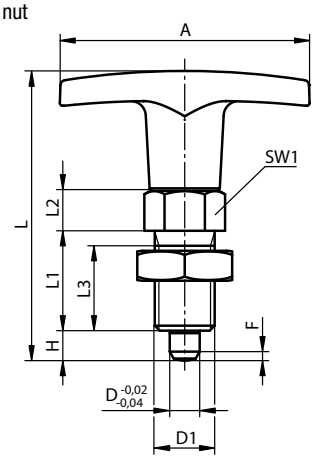

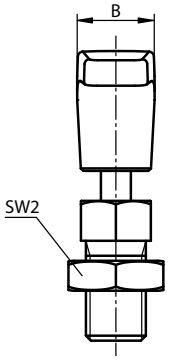

Stainless steel, tempered indexing pin

Code GN	Code R2	Type	A	B	D	D1	L	L1	L2	L3	H	SW1	SW2	F	Spring force initial pressure F1 (approx. N)	Spring force final pressure F2 (approx. N)	Package (pcs)
KP112405206	**KP11240520684**	A	50	15,5	6	M12 x 1,5	58	20	8	17	6	14	-	1,8 x 30°	6	14	1
KP112405308	**KP11240530884**	A	60	18	8	M16 x 1,5	77	26	10	23	8	19	-	2,3 x 30°	15	35	1
KP112405410	**KP11240541084**	A	72	19	10	M20 x 1,5	84	28	12	25	10	22	-	2,8 x 30°	15	34	1
KP112406206	**KP11240620684**	B	50	15,5	6	M12 x 1,5	58	20	8	17	6	14	19	1,8 x 30°	6	14	1
KP112406308	**KP11240630884**	B	60	18	8	M16 x 1,5	77	26	10	23	8	19	24	2,3 x 30°	15	35	1
KP112406410	**KP11240641084**	B	72	19	10	M20 x 1,5	84	28	12	25	10	22	30	2,8 x 30°	15	34	1

MATERIAL - SURFACE TREATMENT

Body: 11SMnPb30 (Steel) burnished
Indexing pin: Cl 5.8 (Steel)
tempered, ground and burnished
Grip: TMP (Thermoplastic) blackish grey
Lock marking: AL (Aluminium) red anodized

NOTES

When the lock mark is visible the plunger is either completely disengaged or only partly in the index position.
1) Marking ring.

ACCESSORIES

Spacing rings KP06659...

TYPE A
non-lockout type
without lock nut

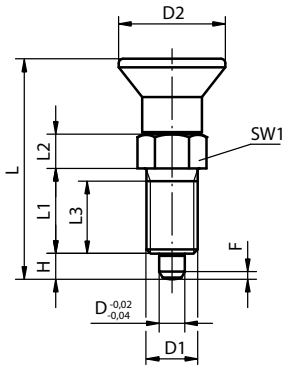

TYPE B
non-lockout type
with lock nut

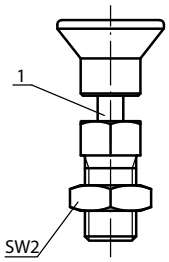

Code	Type	D	D1	D2	L	L1	L2	L3	H	SW1	SW2	F	Spring force initial pressure F1 (approx. N)	Spring force final pressure F2 (approx. N)	Package (pcs)
KP114971105	A	5	M10 x 1	21	43,5	17	7	15	5	13	-	1,3 x 30°	5	12	1
KP114971206	A	6	M12 x 1,5	25	51,7	20	8	17	6	14	-	1,8 x 30°	6	14	1
KP114971308	A	8	M16 x 1,5	33	68	26	10	23	8	19	-	2,3 x 30°	15	35	1
KP114972105	B	5	M10 x 1	21	43,5	17	7	15	5	13	17	1,3 x 30°	5	12	1
KP114972206	B	6	M12 x 1,5	25	51,7	20	8	17	6	14	19	1,8 x 30°	6	14	1
KP114972308	B	8	M16 x 1,5	33	68	26	10	23	8	19	24	2,3 x 30°	15	35	1

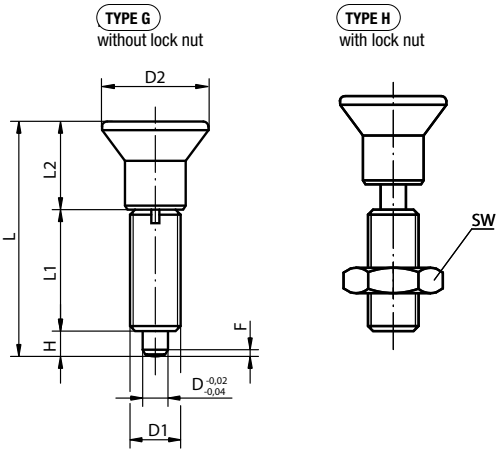

Indexing plunger
with screw-in washer

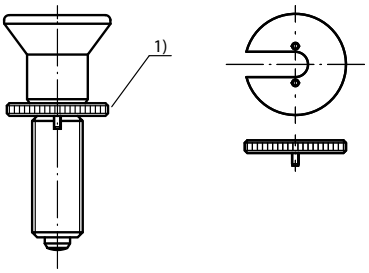

Steel
MATERIAL - SURFACE TREATMENT
Body: Cl 5.8 (Steel)
Indexing pin: Cl 5.8 (Steel) tempered, ground, burnished
Grip: TMP (Thermoplastic) blackish grey

Tempered stainless steel
MATERIAL - SURFACE TREATMENT
Body: AISI303 (Stainless steel)
Indexing pin: AISI420 (Stainless steel) tempered, ground
Grip: TMP (Thermoplastic) blackish grey

Untempered stainless steel
MATERIAL - SURFACE TREATMENT
Body: AISI303 (Stainless steel)
Indexing pin: AISI303 (Stainless steel) ground
Grip: TMP (Thermoplastic) blackish grey

NOTES
1) A washer is available separately to aid by screwing in the indexing plungers. The washer slides beneath the mushroom knob so that the carrier pins engage in the slot.

ACCESSORIES
Spacing rings KP06659...

Steel, tempered indexing pin

Code	Type	D	D1	D2	L	L1	L2	H	SW	F	Spring force initial pressure F1 (approx. N)	Spring force final pressure F2 (approx. N)	Screw-in washer code	Pack. (pcs)
KP034301903	G	3	M6 x 0,75	14	31,5	17	11	3,5	-	0,8 x 30°	4,5	10	KP034499	1
KP034301004	G	4	M8 x 1	18	38,5	21	13,5	4	-	1,3 x 30°	6	12	KP034490	1
KP034301105	G	5	M10 x 1	21	43,5	24	14,5	5	-	1,3 x 30°	5	12	KP034491	1
KP034301206	G	6	M12 x 1,5	25	51,7	28	17,7	6	-	1,8 x 30°	6	14	KP034492	1
KP034301308	G	8	M16 x 1,5	33	68	36	24	8	-	2,3 x 30°	15	35	KP034493	1
KP034301410	G	10	M20 x 1,5	33	74	40	24	10	-	2,8 x 30°	15	34	KP034494	1
KP034301412	G	12	M20 x 1,5	33	78	42	24	12	-	2,8 x 30°	15	39	KP034494	1
KP034301516	G	16	M24 x 2	40	96	50	30	16	-	3,2 x 30°	20	46	KP034495	1
KP034302903	H	3	M6 x 0,75	14	31,5	17	11	3,5	10	0,8 x 30°	4,5	10	KP034499	1
KP034302004	H	4	M8 x 1	18	38,5	21	13,5	4	13	1,3 x 30°	6	12	KP034490	1
KP034302105	H	5	M10 x 1	21	43,5	24	14,5	5	17	1,3 x 30°	5	12	KP034491	1
KP034302206	H	6	M12 x 1,5	25	51,7	28	17,7	6	19	1,8 x 30°	6	14	KP034492	1
KP034302308	H	8	M16 x 1,5	33	68	36	24	8	24	2,3 x 30°	15	35	KP034493	1
KP034302410	H	10	M20 x 1,5	33	74	40	24	10	30	2,8 x 30°	15	34	KP034494	1
KP034302412	H	12	M20 x 1,5	33	78	42	24	12	30	2,8 x 30°	15	39	KP034494	1
KP034302516	H	16	M24 x 2	40	96	50	30	16	36	3,2 x 30°	20	46	KP034495	1

Steel
MATERIAL - SURFACE TREATMENT
Body: Cl 5.8 (Steel)
Indexing pin: Cl 5.8 (Steel) tempered, ground, burnished
Grip: TMP (Thermoplastic) blackish grey

Tempered stainless steel
MATERIAL - SURFACE TREATMENT
Body: AISI303 (Stainless steel)
Indexing pin: AISI420 (Stainless steel) tempered, ground
Grip: TMP (Thermoplastic) blackish grey

Untempered stainless steel
MATERIAL - SURFACE TREATMENT
Body: AISI303 (Stainless steel)
Indexing pin: AISI303 (Stainless steel) ground
Grip: TMP (Thermoplastic) blackish grey

NOTES
1) A washer is available separately to aid by screwing in the indexing plungers. The washer slides beneath the mushroom knob so that the carrier pins engage in the slot.

ACCESSORIES
Spacing rings KP06659...

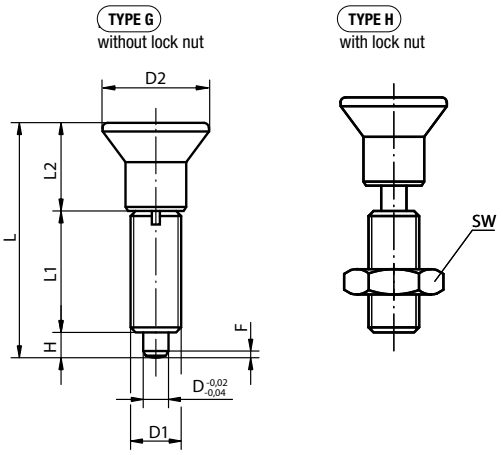

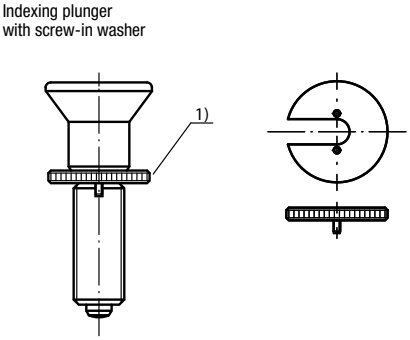

Stainless steel, tempered indexing pin

Code	Type	D	D1	D2	L	L1	L2	H	SW	F	Spring force initial pressure F1 (approx. N)	Spring force final pressure F2 (approx. N)	Screw-in washer code	Pack. (pcs)
KP034311903	G	3	M6 x 0,75	14	31,5	17	11	3,5	-	0,8 x 30°	4,5	10	KP034499	1
KP034311004	G	4	M8 x 1	18	38,5	21	13,5	4	-	1,3 x 30°	6	12	KP034490	1
KP034311105	G	5	M10 x 1	21	43,5	24	14,5	5	-	1,3 x 30°	5	12	KP034491	1
KP034311206	G	6	M12 x 1,5	25	51,7	28	17,7	6	-	1,8 x 30°	6	14	KP034492	1
KP034311308	G	8	M16 x 1,5	33	68	36	24	8	-	2,3 x 30°	15	35	KP034493	1
KP034311410	G	10	M20 x 1,5	33	74	40	24	10	-	2,8 x 30°	15	34	KP034494	1
KP034311412	G	12	M20 x 1,5	33	78	42	24	12	-	2,8 x 30°	15	39	KP034494	1
KP034311516	G	16	M24 x 2	40	96	50	30	16	-	3,2 x 30°	20	46	KP034495	1
KP034312903	H	3	M6 x 0,75	14	31,5	17	11	3,5	10	0,8 x 30°	4,5	10	KP034499	1
KP034312004	H	4	M8 x 1	18	38,5	21	13,5	4	13	1,3 x 30°	6	12	KP034490	1
KP034312105	H	5	M10 x 1	21	43,5	24	14,5	5	17	1,3 x 30°	5	12	KP034491	1
KP034312206	H	6	M12 x 1,5	25	51,7	28	17,7	6	19	1,8 x 30°	6	14	KP034492	1
KP034312308	H	8	M16 x 1,5	33	68	36	24	8	24	2,3 x 30°	15	35	KP034493	1
KP034312410	H	10	M20 x 1,5	33	74	40	24	10	30	2,8 x 30°	15	34	KP034494	1
KP034312412	H	12	M20 x 1,5	33	78	42	24	12	30	2,8 x 30°	15	39	KP034494	1
KP034312516	H	16	M24 x 2	40	96	50	30	16	36	3,2 x 30°	20	46	KP034495	1

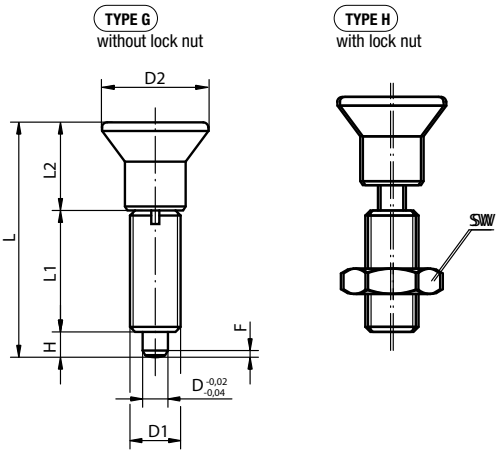

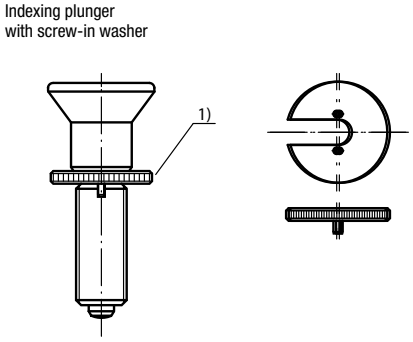

Steel
MATERIAL - SURFACE TREATMENT
Body: Cl 5.8 (Steel)
Indexing pin: Cl 5.8 (Steel) tempered, ground, burnished
Grip: TMP (Thermoplastic) blackish grey

Tempered stainless steel
MATERIAL - SURFACE TREATMENT
Body: AISI303 (Stainless steel)
Indexing pin: AISI420 (Stainless steel) tempered, ground
Grip: TMP (Thermoplastic) blackish grey

Untempered stainless steel
MATERIAL - SURFACE TREATMENT
Body: AISI303 (Stainless steel)
Indexing pin: AISI303 (Stainless steel) ground
Grip: TMP (Thermoplastic) blackish grey

NOTES
1) A washer is available separately to aid by screwing in the indexing plungers. The washer slides beneath the mushroom knob so that the carrier pins engage in the slot.

ACCESSORIES
Spacing rings KP06659...

Stainless steel, untempered indexing pin

Code	Type	D	D1	D2	L	L1	L2	H	SW	F	Spring force initial pressure F1 (approx. N)	Spring force final pressure F2 (approx. N)	Screw-in washer code	Pack. (pcs)
KP03431903	G	3	M6 x 0,75	14	31,5	17	11	3,5	-	0,8 x 30°	4,5	10	KP034499	1
KP03431004	G	4	M8 x 1	18	38,5	21	13,5	4	-	1,3 x 30°	6	12	KP034490	1
KP03431105	G	5	M10 x 1	21	43,5	24	14,5	5	-	1,3 x 30°	5	12	KP034491	1
KP03431206	G	6	M12 x 1,5	25	51,7	28	17,7	6	-	1,8 x 30°	6	14	KP034492	1
KP03431308	G	8	M16 x 1,5	33	68	36	24	8	-	2,3 x 30°	15	35	KP034493	1
KP03431410	G	10	M20 x 1,5	33	74	40	24	10	-	2,8 x 30°	15	34	KP034494	1
KP03431412	G	12	M20 x 1,5	33	78	42	24	12	-	2,8 x 30°	15	39	KP034494	1
KP03431516	G	16	M24 x 2	40	96	50	30	16	-	3,2 x 30°	20	46	KP034495	1
KP03432903	H	3	M6 x 0,75	14	31,5	17	11	3,5	10	0,8 x 30°	4,5	10	KP034499	1
KP03432004	H	4	M8 x 1	18	38,5	21	13,5	4	13	1,3 x 30°	6	12	KP034490	1
KP03432105	H	5	M10 x 1	21	43,5	24	14,5	5	17	1,3 x 30°	5	12	KP034491	1
KP03432206	H	6	M12 x 1,5	25	51,7	28	17,7	6	19	1,8 x 30°	6	14	KP034492	1
KP03432308	H	8	M16 x 1,5	33	68	36	24	8	24	2,3 x 30°	15	35	KP034493	1
KP03432410	H	10	M20 x 1,5	33	74	40	24	10	30	2,8 x 30°	15	34	KP034494	1
KP03432412	H	12	M20 x 1,5	33	78	42	24	12	30	2,8 x 30°	15	39	KP034494	1
KP03432516	H	16	M24 x 2	40	96	50	30	16	36	3,2 x 30°	20	46	KP034495	1

Tempered stainless steel
MATERIAL - SURFACE TREATMENT
Body: AISI303 (Stainless steel)
Indexing pin: AISI420 (Stainless steel) tempered
Grip: AISI303 (Stainless steel) electrolytic polishing

Untempered stainless steel
MATERIAL - SURFACE TREATMENT
Body: AISI303 (Stainless steel)
Indexing pin: AISI420 (Stainless steel)
Grip: AISI303 (Stainless steel) electrolytic polishing

NOTES
1) A washer is available separately to aid by screwing in the indexing plungers. The washer slides beneath the mushroom knob so that the carrier pins engage in the slot.

ACCESSORIES
Spacing rings KP06659...

TYPE G
without lock nut

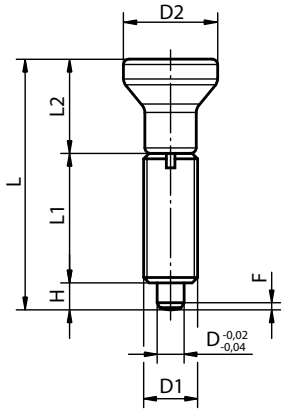

TYPE H
with lock nut

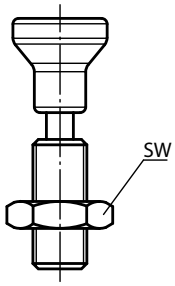

Indexing plunger
with screw-in washer

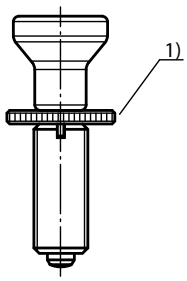

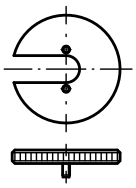

Stainless steel, tempered indexing pin

Code	Type	D	D1	D2	L	L1	L2	H	SW	F	Spring force initial pressure F1 (approx. N)	Spring force final pressure F2 (approx. N)	Screw-in washer code	Pack. (pcs)
KP0634001903	G	3	M6 x 0,75	14	34,5	17	14	3,5	-	0,8 x 30°	4,5	10	KP034499	1
KP0634001004	G	4	M8 x 1	18	43	21	18	4	-	1,3 x 30°	6	12	KP034490	1
KP0634001105	G	5	M10 x 1	21	50	24	21	5	-	1,3 x 30°	5	12	KP034491	1
KP0634001206	G	6	M12 x 1,5	25	59	28	25	6	-	1,8 x 30°	6	14	KP034492	1
KP0634001308	G	8	M16 x 1,5	33	77	36	33	8	-	2,3 x 30°	15	35	KP034493	1
KP0634001410	G	10	M20 x 1,5	33	83	40	33	10	-	2,8 x 30°	15	34	KP034494	1
KP0634001412	G	12	M20 x 1,5	33	87	42	33	12	-	2,8 x 30°	15	39	KP034494	1
KP0634001516	G	16	M24 x 2	40	106	50	40	16	-	3,2 x 30°	20	46	KP034495	1
KP0634002903	H	3	M6 x 0,75	14	34,5	17	14	3,5	10	0,8 x 30°	4,5	10	KP034499	1
KP0634002004	H	4	M8 x 1	18	43	21	18	4	13	1,3 x 30°	6	12	KP034490	1
KP0634002105	H	5	M10 x 1	21	50	24	21	5	17	1,3 x 30°	5	12	KP034491	1
KP0634002206	H	6	M12 x 1,5	25	59	28	25	6	19	1,8 x 30°	6	14	KP034492	1
KP0634002308	H	8	M16 x 1,5	33	77	36	33	8	24	2,3 x 30°	15	35	KP034493	1
KP0634002410	H	10	M20 x 1,5	33	83	40	33	10	30	2,8 x 30°	15	34	KP034494	1
KP0634002412	H	12	M20 x 1,5	33	87	42	33	12	30	2,8 x 30°	15	39	KP034494	1
KP0634002516	H	16	M24 x 2	40	106	50	40	16	36	3,2 x 30°	20	46	KP034495	1

Tempered stainless steel
MATERIAL - SURFACE TREATMENT
Body: AISI303 (Stainless steel)
Indexing pin: AISI420 (Stainless steel) tempered
Grip: AISI303 (Stainless steel) electrolytic polishing

Untempered stainless steel
MATERIAL - SURFACE TREATMENT
Body: AISI303 (Stainless steel)
Indexing pin: AISI420 (Stainless steel)
Grip: AISI303 (Stainless steel) electrolytic polishing

NOTES
1) A washer is available separately to aid by screwing in the indexing plungers. The washer slides beneath the mushroom knob so that the carrier pins engage in the slot.

ACCESSORIES
Spacing rings KP06659...

TYPE G
without lock nut

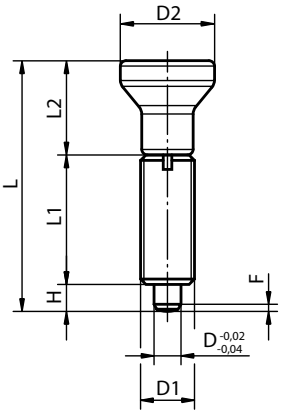

TYPE H
with lock nut

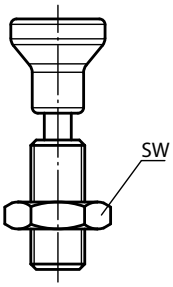

Indexing plunger
with screw-in washer

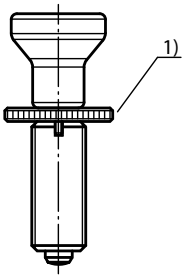

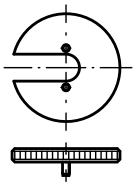

Stainless steel, untempered indexing pin

Code	Type	D	D1	D2	L	L1	L2	H	SW	F	Spring force initial pressure F1 (approx. N)	Spring force final pressure F2 (approx. N)	Screw-in washer code	Pack. (pcs)
KP0634111903	G	3	M6 x 0,75	14	34,5	17	14	3,5	-	0,8 x 30°	4,5	10	KP034499	1
KP0634111004	G	4	M8 x 1	18	43	21	18	4	-	1,3 x 30°	6	12	KP034490	1
KP0634111105	G	5	M10 x 1	21	50	24	21	5	-	1,3 x 30°	5	12	KP034491	1
KP0634111206	G	6	M12 x 1,5	25	59	28	25	6	-	1,8 x 30°	6	14	KP034492	1
KP0634111308	G	8	M16 x 1,5	33	77	36	33	8	-	2,3 x 30°	15	35	KP034493	1
KP0634111410	G	10	M20 x 1,5	33	83	40	33	10	-	2,8 x 30°	15	34	KP034494	1
KP0634111412	G	12	M20 x 1,5	33	87	42	33	12	-	2,8 x 30°	15	39	KP034494	1
KP0634111516	G	16	M24 x 2	40	106	50	40	16	-	3,2 x 30°	20	46	KP034495	1
KP0634112903	H	3	M6 x 0,75	14	34,5	17	14	3,5	10	0,8 x 30°	4,5	10	KP034499	1
KP0634112004	H	4	M8 x 1	18	43	21	18	4	13	1,3 x 30°	6	12	KP034490	1
KP0634112105	H	5	M10 x 1	21	50	24	21	5	17	1,3 x 30°	5	12	KP034491	1
KP0634112206	H	6	M12 x 1,5	25	59	28	25	6	19	1,8 x 30°	6	14	KP034492	1
KP0634112308	H	8	M16 x 1,5	33	77	36	33	8	24	2,3 x 30°	15	35	KP034493	1
KP0634112410	H	10	M20 x 1,5	33	83	40	33	10	30	2,8 x 30°	15	34	KP034494	1
KP0634112412	H	12	M20 x 1,5	33	87	42	33	12	30	2,8 x 30°	15	39	KP034494	1
KP0634112516	H	16	M24 x 2	40	106	50	40	16	36	3,2 x 30°	20	46	KP034495	1

MATERIAL
Cl 5.8 (Steel)

SURFACE TREATMENT
White galvanized

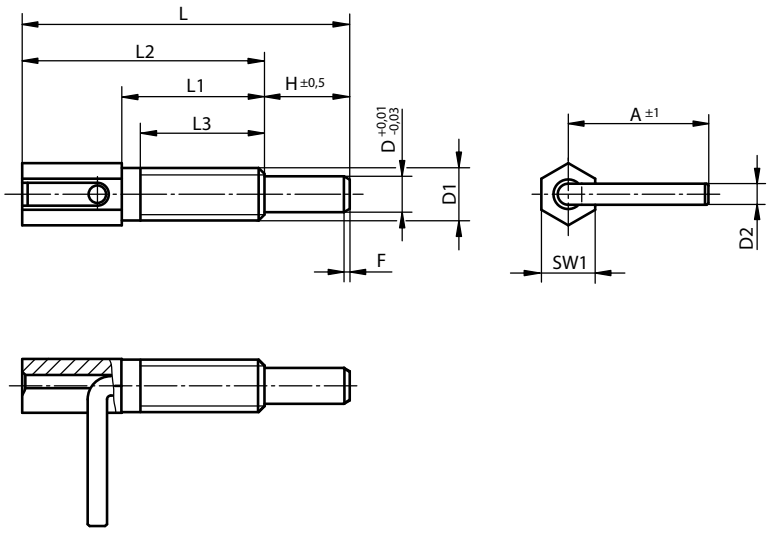

Code	D	D1	D2	L	L1	L2	L3	H	A	SW1	F	Spring force initial pressure F1 (approx. N)	Spring force final pressure F2 (approx. N)	Tightening torque max (Nm)	Pack. (pcs)
KP03401104	4	M6	2,3	41,5	20	12	17	9,5	15,5	6	0,7 x 30°	3	10	1,6	1
KP03401905	5	M8	3	54	27	15	24	12	19,2	8	0,9 x 30°	3,5	13,5	4,5	1
KP03401206	6	M10	3,5	65	33,5	17,5	30	14	22,9	10	1,1 x 30°	4	16	10	1
KP03401308	8	M12	4,7	73	31,8	22,2	28	19	31,2	12	1,3 x 30°	4	22	13	1
KP03401410	10	M16	4,7	102,5	50,5	27	44,5	25	32,7	16	1,6 x 30°	4	23	42	1

INDEXING PLUNGER WITH COLLAR
with key ring

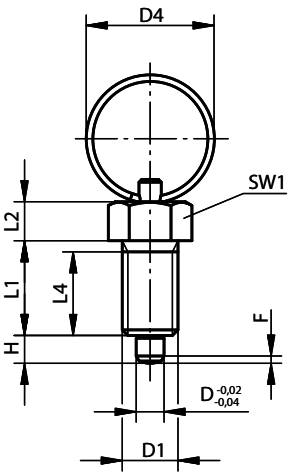

TYPE R
without lock nut

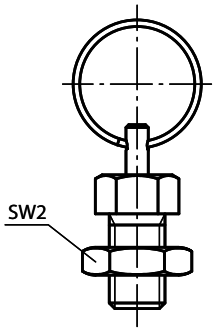

TYPE S
with lock nut

Steel
MATERIAL - SURFACE TREATMENT
Body: Cl 5.8 (Steel)
Indexing pin: Cl 5.8 (Steel) tempered, ground, burnished
Ring: AISI301 (Stainless steel)

Tempered stainless steel
MATERIAL - SURFACE TREATMENT
Body: AISI303 (Stainless steel)
Indexing pin: AISI420 (Stainless steel) tempered, ground
Ring: AISI301 (Stainless steel)

Untempered stainless steel
MATERIAL - SURFACE TREATMENT
Body: AISI303 (Stainless steel)
Indexing pin: AISI303 (Stainless steel) ground
Ring: AISI301 (Stainless steel)

NOTES
The key ring allows automatic actuation of the indexing plunger by e.g. program-controlled pneumatic cylinder or by remote control using bowden cables.

ACCESSORIES
Spacing rings KP06659...

Steel, tempered indexing pin

Code	Type	D	D1	D4	L1	L2	L4	H	SW1	SW2	F	Spring force initial pressure F1 (approx. N)	Spring force final pressure F2 (approx. N)	Package (pcs)
KP03423004	R	4	M8 x 1	15	15	6	13	4	10	-	1 x 30°	6	12	1
KP03423105	R	5	M10 x 1	23	17	7	15	5	13	-	1,3 x 30°	5	12	1
KP03423206	R	6	M12 x 1,5	23	20	8	17	6	14	-	1,8 x 30°	6	14	1
KP03423308	R	8	M16 x 1,5	28	26	10	23	8	19	-	2,3 x 30°	15	35	1
KP03423410	R	10	M20 x 1,5	28	28	12	25	10	22	-	2,8 x 30°	15	34	1
KP03424004	S	4	M8 x 1	15	15	6	13	4	10	13	1 x 30°	6	12	1
KP03424105	S	5	M10 x 1	23	17	7	15	5	13	17	1,3 x 30°	5	12	1
KP03424206	S	6	M12 x 1,5	23	20	8	17	6	14	19	1,8 x 30°	6	14	1
KP03424308	S	8	M16 x 1,5	28	26	10	23	8	19	24	2,3 x 30°	15	35	1
KP03424410	S	10	M20 x 1,5	28	28	12	25	10	22	30	2,8 x 30°	15	34	1

Steel
MATERIAL - SURFACE TREATMENT
Body: Cl 5.8 (Steel)
Indexing pin: Cl 5.8 (Steel) tempered, ground, burnished
Ring: AISI301 (Stainless steel)

Tempered stainless steel
MATERIAL - SURFACE TREATMENT
Body: AISI303 (Stainless steel)
Indexing pin: AISI420 (Stainless steel) tempered, ground
Ring: AISI301 (Stainless steel)

Untempered stainless steel
MATERIAL - SURFACE TREATMENT
Body: AISI303 (Stainless steel)
Indexing pin: AISI303 (Stainless steel) ground
Ring: AISI301 (Stainless steel)

NOTES
The key ring allows automatic actuation of the indexing plunger by e.g. program-controlled pneumatic cylinder or by remote control using bowden cables.

ACCESSORIES
Spacing rings KP06659...

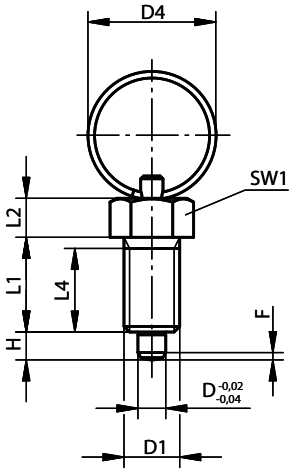

TYPE R
without lock nut

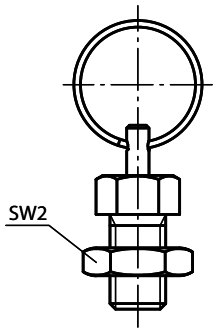

TYPE S
with lock nut

Stainless steel, tempered indexing pin

Code	Type	D	D1	D4	L1	L2	L4	H	SW1	SW2	F	Spring force initial pressure F1 (approx. N)	Spring force final pressure F2 (approx. N)	Package (pcs)
KP034203004	R	4	M8 x 1	15	15	6	13	4	10	-	1 x 30°	6	12	1
KP034203105	R	5	M10 x 1	23	17	7	15	5	13	-	1,3 x 30°	5	12	1
KP034203206	R	6	M12 x 1,5	23	20	8	17	6	14	-	1,8 x 30°	6	14	1
KP034203308	R	8	M16 x 1,5	28	26	10	23	8	19	-	2,3 x 30°	15	35	1
KP034203410	R	10	M20 x 1,5	28	28	12	25	10	22	-	2,8 x 30°	15	34	1
KP034204004	S	4	M8 x 1	15	15	6	13	4	10	13	1 x 30°	6	12	1
KP034204105	S	5	M10 x 1	23	17	7	15	5	13	17	1,3 x 30°	5	12	1
KP034204206	S	6	M12 x 1,5	23	20	8	17	6	14	19	1,8 x 30°	6	14	1
KP034204308	S	8	M16 x 1,5	28	26	10	23	8	19	24	2,3 x 30°	15	35	1
KP034204410	S	10	M20 x 1,5	28	28	12	25	10	22	30	2,8 x 30°	15	34	1

INDEXING PLUNGER WITH COLLAR
with key ring

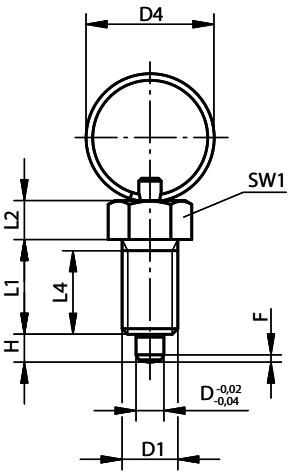

TYPE R
without lock nut

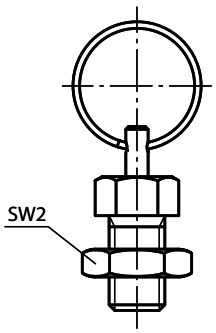

TYPE S
with lock nut

Steel
MATERIAL - SURFACE TREATMENT
Body: Cl 5.8 (Steel)
Indexing pin: Cl 5.8 (Steel) tempered, ground, burnished
Ring: AISI301 (Stainless steel)

Tempered stainless steel
MATERIAL - SURFACE TREATMENT
Body: AISI303 (Stainless steel)
Indexing pin: AISI420 (Stainless steel) tempered, ground
Ring: AISI301 (Stainless steel)

Untempered stainless steel
MATERIAL - SURFACE TREATMENT
Body: AISI303 (Stainless steel)
Indexing pin: AISI303 (Stainless steel) ground
Ring: AISI301 (Stainless steel)

NOTES
The key ring allows automatic actuation of the indexing plunger by e.g. program-controlled pneumatic cylinder or by remote control using bowden cables.

ACCESSORIES
Spacing rings KP06659...

Stainless steel, untempered indexing pin

Code	Type	D	D1	D4	L1	L2	L4	H	SW1	SW2	F	Spring force initial pressure F1 (approx. N)	Spring force final pressure F2 (approx. N)	Package (pcs)
KP034213004	R	4	M8 x 1	15	15	6	13	4	10	-	1 x 30°	6	12	1
KP034213105	R	5	M10 x 1	23	17	7	15	5	13	-	1,3 x 30°	5	12	1
KP034213206	R	6	M12 x 1,5	23	20	8	17	6	14	-	1,8 x 30°	6	14	1
KP034213308	R	8	M16 x 1,5	28	26	10	23	8	19	-	2,3 x 30°	15	35	1
KP034213410	R	10	M20 x 1,5	28	28	12	25	10	22	-	2,8 x 30°	15	34	1
KP034214004	S	4	M8 x 1	15	15	6	13	4	10	13	1 x 30°	6	12	1
KP034214105	S	5	M10 x 1	23	17	7	15	5	13	17	1,3 x 30°	5	12	1
KP034214206	S	6	M12 x 1,5	23	20	8	17	6	14	19	1,8 x 30°	6	14	1
KP034214308	S	8	M16 x 1,5	28	26	10	23	8	19	24	2,3 x 30°	15	35	1
KP034214410	S	10	M20 x 1,5	28	28	12	25	10	22	30	2,8 x 30°	15	34	1

Steel
MATERIAL - SURFACE TREATMENT
Body: Cl 5.8 (Steel)
Indexing pin: Cl 5.8 (Steel) tempered, ground, burnished
Ring: AISI301 (Stainless steel)

Tempered stainless steel
MATERIAL - SURFACE TREATMENT
Body: AISI303 (Stainless steel)
Indexing pin: AISI420 (Stainless steel) tempered, ground
Ring: AISI301 (Stainless steel)

Untempered stainless steel
MATERIAL - SURFACE TREATMENT
Body: AISI303 (Stainless steel)
Indexing pin: AISI303 (Stainless steel) ground
Ring: AISI301 (Stainless steel)

NOTES
The key ring allows automatic actuation of the indexing plunger by e.g. program-controlled pneumatic cylinder or by remote control using bowden cables.
1) A washer is available separately to aid by screwing in the indexing plungers. The washer slides beneath the mushroom knob so that the carrier pins engage in the slot.

ACCESSORIES
Spacing rings KP06659...

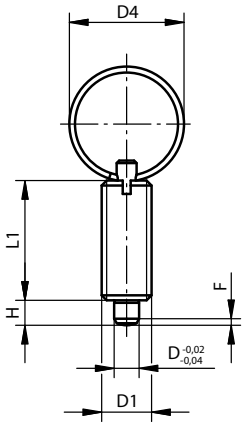

TYPE T
without lock nut

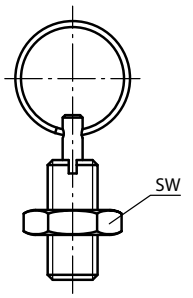

TYPE U
with lock nut

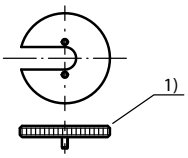

Steel, tempered indexing pin

Code	Type	D	D1	D4	L1	H	SW	F	Spring force initial pressure F1 (approx. N)	Spring force final pressure F2 (approx. N)	Screw-in washer code	Package (pcs)
KP06353004	T	4	M8 x 1	15	21	4	-	1 x 30°	6	12	KP034490	1
KP06353105	T	5	M10 x 1	23	24	5	-	1,3 x 30°	5	12	KP034491	1
KP06353206	T	6	M12 x 1,5	23	28	6	-	1,8 x 30°	6	14	KP034492	1
KP06353308	T	8	M16 x 1,5	28	36	8	-	2,3 x 30°	15	35	KP034493	1
KP06353410	T	10	M20 x 1,5	28	40	10	-	2,8 x 30°	15	34	KP034494	1
KP06354004	U	4	M8 x 1	15	21	4	13	1 x 30°	6	12	KP034490	1
KP06354105	U	5	M10 x 1	23	24	5	17	1,3 x 30°	5	12	KP034491	1
KP06354206	U	6	M12 x 1,5	23	28	6	19	1,8 x 30°	6	14	KP034492	1
KP06354308	U	8	M16 x 1,5	28	36	8	24	2,3 x 30°	15	35	KP034493	1
KP06354410	U	10	M20 x 1,5	28	40	10	30	2,8 x 30°	15	34	KP034494	1

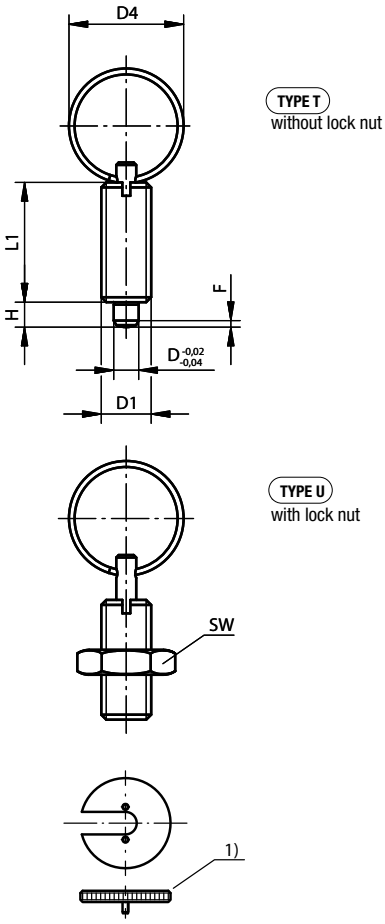

Steel
MATERIAL - SURFACE TREATMENT
Body: Cl 5.8 (Steel)
Indexing pin: Cl 5.8 (Steel) tempered, ground, burnished
Ring: AISI301 (Stainless steel)

Tempered stainless steel
MATERIAL - SURFACE TREATMENT
Body: AISI303 (Stainless steel)
Indexing pin: AISI420 (Stainless steel) tempered, ground
Ring: AISI301 (Stainless steel)

Untempered stainless steel
MATERIAL - SURFACE TREATMENT
Body: AISI303 (Stainless steel)
Indexing pin: AISI303 (Stainless steel) ground
Ring: AISI301 (Stainless steel)

NOTES
The key ring allows automatic actuation of the indexing plunger by e.g. program-controlled pneumatic cylinder or by remote control using bowden cables.
1) A washer is available separately to aid by screwing in the indexing plungers. The washer slides beneath the mushroom knob so that the carrier pins engage in the slot.

ACCESSORIES
Spacing rings KP06659...

Stainless steel, tempered indexing pin

Code	Type	D	D1	D4	L1	H	SW	F	Spring force initial pressure F1 (approx. N)	Spring force final pressure F2 (approx. N)	Screw-in washer code	Package (pcs)
KP063503004	T	4	M8 x 1	15	21	4	-	1 x 30°	6	12	KP034490	1
KP063503105	T	5	M10 x 1	23	24	5	-	1,3 x 30°	5	12	KP034491	1
KP063503206	T	6	M12 x 1,5	23	28	6	-	1,8 x 30°	6	14	KP034492	1
KP063503308	T	8	M16 x 1,5	28	36	8	-	2,3 x 30°	15	35	KP034493	1
KP063503410	T	10	M20 x 1,5	28	40	10	-	2,8 x 30°	15	34	KP034494	1
KP063504004	U	4	M8 x 1	15	21	4	13	1 x 30°	6	12	KP034490	1
KP063504105	U	5	M10 x 1	23	24	5	17	1,3 x 30°	5	12	KP034491	1
KP063504206	U	6	M12 x 1,5	23	28	6	19	1,8 x 30°	6	14	KP034492	1
KP063504308	U	8	M16 x 1,5	28	36	8	24	2,3 x 30°	15	35	KP034493	1
KP063504410	U	10	M20 x 1,5	28	40	10	30	2,8 x 30°	15	34	KP034494	1

Steel
MATERIAL - SURFACE TREATMENT
Body: Cl 5.8 (Steel)
Indexing pin: Cl 5.8 (Steel) tempered, ground, burnished
Ring: AISI301 (Stainless steel)

Tempered stainless steel
MATERIAL - SURFACE TREATMENT
Body: AISI303 (Stainless steel)
Indexing pin: AISI420 (Stainless steel) tempered, ground
Ring: AISI301 (Stainless steel)

Untempered stainless steel
MATERIAL - SURFACE TREATMENT
Body: AISI303 (Stainless steel)
Indexing pin: AISI303 (Stainless steel) ground
Ring: AISI301 (Stainless steel)

NOTES
The key ring allows automatic actuation of the indexing plunger by e.g. program-controlled pneumatic cylinder or by remote control using bowden cables.
1) A washer is available separately to aid by screwing in the indexing plungers. The washer slides beneath the mushroom knob so that the carrier pins engage in the slot.

ACCESSORIES
Spacing rings KP06659...

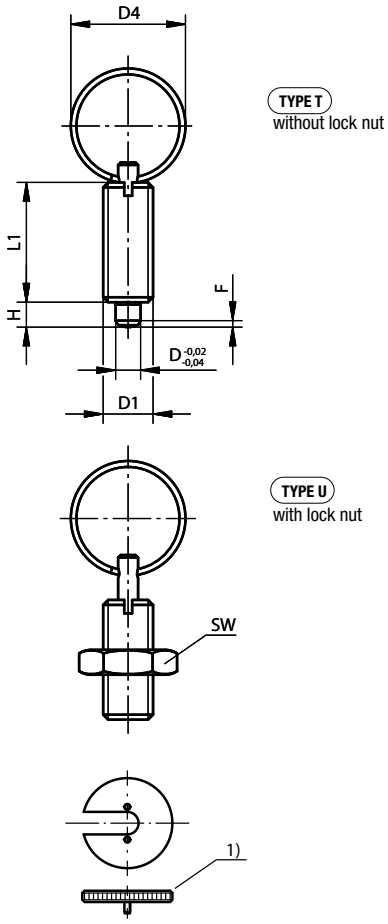

Stainless steel, untempered indexing pin

Code	Type	D	D1	D4	L1	H	SW	F	Spring force initial pressure F1 (approx. N)	Spring force final pressure F2 (approx. N)	Screw-in washer code	Package (pcs)
KP063513004	T	4	M8 x 1	15	21	4	-	1 x 30°	6	12	KP034490	1
KP063513105	T	5	M10 x 1	23	24	5	-	1,3 x 30°	5	12	KP034491	1
KP063513206	T	6	M12 x 1,5	23	28	6	-	1,8 x 30°	6	14	KP034492	1
KP063513308	T	8	M16 x 1,5	28	36	8	-	2,3 x 30°	15	35	KP034493	1
KP063513410	T	10	M20 x 1,5	28	40	10	-	2,8 x 30°	15	34	KP034494	1
KP063514004	U	4	M8 x 1	15	21	4	13	1 x 30°	6	12	KP034490	1
KP063514105	U	5	M10 x 1	23	24	5	17	1,3 x 30°	5	12	KP034491	1
KP063514206	U	6	M12 x 1,5	23	28	6	19	1,8 x 30°	6	14	KP034492	1
KP063514308	U	8	M16 x 1,5	28	36	8	24	2,3 x 30°	15	35	KP034493	1
KP063514410	U	10	M20 x 1,5	28	40	10	30	2,8 x 30°	15	34	KP034494	1

MATERIAL
AISI303 (Stainless steel)

NOTES
Spacer rings are used to adjust the indexing plunger thread length to suit the application wall thickness.
1) Positioning pin
2) Spacer ring

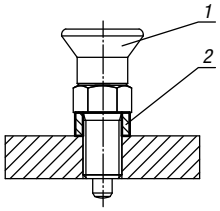

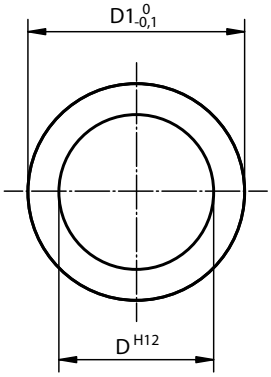

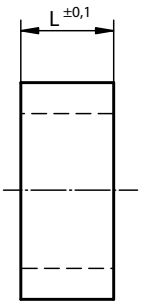

Code	D	D1	L	Package (pcs)
KP066590811021	8	11	2	1
KP066590811031	8	11	3	1
KP066590811041	8	11	4	1
KP066590811061	8	11	6	1
KP066590811081	8	11	8	1
KP066591014021	10	14	2	1
KP066591014031	10	14	3	1
KP066591014041	10	14	4	1
KP066591014061	10	14	6	1
KP066591014081	10	14	8	1
KP066591215021	12	15	2	1
KP066591215041	12	15	4	1
KP066591215051	12	15	5	1
KP066591215061	12	15	6	1
KP066591215081	12	15	8	1
KP066591217021	12	17	2	1
KP066591217041	12	17	4	1
KP066591217051	12	17	5	1
KP066591217061	12	17	6	1
KP066591217081	12	17	8	1
KP066591621041	16	21	4	1
KP066591621051	16	21	5	1
KP066591621061	16	21	6	1
KP066591621081	16	21	8	1
KP066591621101	16	21	10	1

MATERIAL - SURFACE TREATMENT

Body: Cl 5.8 (Steel) burnished
Indexing pin: Cl 5.8 (Steel) tempered, ground
Grip: Black powder coating

NOTES

Cam action indexing plungers are used when the indexing pin must not project all the time. Turning the handle 180° retracts the pin, and a notch ensures that the handle remains in position.

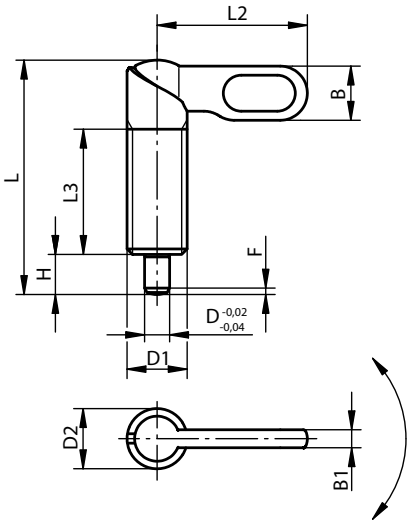

TYPE A
unpainted knob
without nut

TYPE C
powder coated knob
without nut

Code type A	Code type C	D	D1	D2	L	L2	L3	B	B1	H	F	Spring force initial pressure F1 (approx. N)	Spring force final pressure F2 (approx. N)	Package (pcs)
KP0348040410	**KP0348060410**	4	M10	10	38	25	20	9	3	6	1 x 30°	8	14	1
KP0348040510	**KP0348060510**	5	M10	10	38	25	20	9	3	6	1,3 x 30°	8	14	1
KP0348040610	**KP0348060610**	6	M10	10	38	25	20	9	3	6	1,8 x 30°	8	14	1
KP03480404101	**KP03480604101**	4	M10 x 1	10	38	25	20	9	3	6	1 x 30°	8	14	1
KP03480405101	**KP03480605101**	5	M10 x 1	10	38	25	20	9	3	6	1,3 x 30°	8	14	1
KP03480406101	**KP03480606101**	6	M10 x 1	10	38	25	20	9	3	6	1,8 x 30°	8	14	1
KP0348040512	**KP0348060512**	5	M12	12	46,8	30	25	10,8	3,6	8	1,3 x 30°	8	15	1
KP0348040612	**KP0348060612**	6	M12	12	46,8	30	25	10,8	3,6	8	1,8 x 30°	8	15	1
KP0348040812	**KP0348060812**	8	M12	12	46,8	30	25	10,8	3,6	8	2,3 x 30°	8	15	1
KP03480405121	**KP03480605121**	5	M12 x 1,5	12	46,8	30	25	10,8	3,6	8	1,3 x 30°	8	15	1
KP03480406121	**KP03480606121**	6	M12 x 1,5	12	46,8	30	25	10,8	3,6	8	1,8 x 30°	8	15	1
KP03480408121	**KP03480608121**	8	M12 x 1,5	12	46,8	30	25	10,8	3,6	8	2,3 x 30°	8	15	1
KP0348040616	**KP0348060616**	6	M16	16	60,4	40	32	14,4	4,8	10	1,8 x 30°	15	35	1
KP0348040816	**KP0348060816**	8	M16	16	60,4	40	32	14,4	4,8	10	2,3 x 30°	15	35	1
KP0348041016	**KP0348061016**	10	M16	16	60,4	40	32	14,4	4,8	10	2,8 x 30°	15	35	1
KP03480406161	**KP03480606161**	6	M16 x 1,5	16	60,4	40	32	14,4	4,8	10	1,8 x 30°	15	35	1
KP03480408161	**KP03480608161**	8	M16 x 1,5	16	60,4	40	32	14,4	4,8	10	2,3 x 30°	15	35	1
KP03480410161	**KP03480610161**	10	M16 x 1,5	16	60,4	40	32	14,4	4,8	10	2,8 x 30°	15	35	1
KP0348040820	**KP0348060820**	8	M20	20	70	50	35	18	6	12	2,3 x 30°	20	60	1
KP0348041020	**KP0348061020**	10	M20	20	70	50	35	18	6	12	2,8 x 30°	20	60	1
KP0348041220	**KP0348061220**	12	M20	20	70	50	35	18	6	12	3 x 30°	20	60	1
KP03480408201	**KP03480608201**	8	M20 x 1,5	20	70	50	35	18	6	12	2,3 x 30°	20	60	1
KP03480410201	**KP03480610201**	10	M20 x 1,5	20	70	50	35	18	6	12	2,8 x 30°	20	60	1
KP03480412201	**KP03480612201**	12	M20 x 1,5	20	70	50	35	18	6	12	3 x 30°	20	60	1

MATERIAL - SURFACE TREATMENT

Body:	Cl 5.8 (Steel) burnished
Indexing pin:	Cl 5.8 (Steel) tempered, ground
Grip:	Black powder coating

NOTES

Cam action indexing plungers are used when the indexing pin must not project all the time. Turning the handle 180° retracts the pin, and a notch ensures that the handle remains in position.

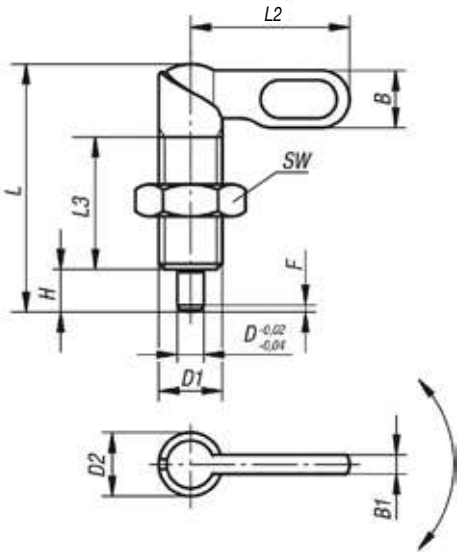

TYPE B
unpainted knob
with nut

TYPE D
powder coated knob
with nut

Code type B	Code type D	D	D1	D2	L	L2	L3	B	B1	H	SW	F	Spring force initial pressure F1 (approx. N)	Spring force final pressure F2 (approx. N)	Package (pcs)
KP0348050410	**KP0348070410**	4	M10	10	38	25	20	9	3	6	17	1 x 30°	8	14	1
KP0348050510	**KP0348070510**	5	M10	10	38	25	20	9	3	6	17	1,3 x 30°	8	14	1
KP0348050610	**KP0348070610**	6	M10	10	38	25	20	9	3	6	17	1,8 x 30°	8	14	1
KP03480504101	**KP03480704101**	4	M10 x 1	10	38	25	20	9	3	6	17	1 x 30°	8	14	1
KP03480505101	**KP03480705101**	5	M10 x 1	10	38	25	20	9	3	6	17	1,3 x 30°	8	14	1
KP03480506101	**KP03480706101**	6	M10 x 1	10	38	25	20	9	3	6	17	1,8 x 30°	8	14	1
KP0348050512	**KP0348070512**	5	M12	12	46,8	30	25	10,8	3,6	8	19	1,3 x 30°	8	15	1
KP0348050612	**KP0348070612**	6	M12	12	46,8	30	25	10,8	3,6	8	19	1,8 x 30°	8	15	1
KP0348050812	**KP0348070812**	8	M12	12	46,8	30	25	10,8	3,6	8	19	2,3 x 30°	8	15	1
KP03480505121	**KP03480705121**	5	M12 x 1,5	12	46,8	30	25	10,8	3,6	8	19	1,3 x 30°	8	15	1
KP03480506121	**KP03480706121**	6	M12 x 1,5	12	46,8	30	25	10,8	3,6	8	19	1,8 x 30°	8	15	1
KP03480508121	**KP03480708121**	8	M12 x 1,5	12	46,8	30	25	10,8	3,6	8	19	2,3 x 30°	8	15	1
KP0348050616	**KP0348070616**	6	M16	16	60,4	40	32	14,4	4,8	10	24	1,8 x 30°	15	35	1
KP0348050816	**KP0348070816**	8	M16	16	60,4	40	32	14,4	4,8	10	24	2,3 x 30°	15	35	1
KP0348051016	**KP0348071016**	10	M16	16	60,4	40	32	14,4	4,8	10	24	2,8 x 30°	15	35	1
KP03480506161	**KP03480706161**	6	M16 x 1,5	16	60,4	40	32	14,4	4,8	10	24	1,8 x 30°	15	35	1
KP03480508161	**KP03480708161**	8	M16 x 1,5	16	60,4	40	32	14,4	4,8	10	24	2,3 x 30°	15	35	1
KP03480510161	**KP03480710161**	10	M16 x 1,5	16	60,4	40	32	14,4	4,8	10	24	2,8 x 30°	15	35	1
KP0348050820	**KP0348070820**	8	M20	20	70	50	35	18	6	12	30	2,3 x 30°	20	60	1
KP0348051020	**KP0348071020**	10	M20	20	70	50	35	18	6	12	30	2,8 x 30°	20	60	1
KP0348051220	**KP0348071220**	12	M20	20	70	50	35	18	6	12	30	3 x 30°	20	60	1
KP03480508201	**KP03480708201**	8	M20 x 1,5	20	70	50	35	18	6	12	30	2,3 x 30°	20	60	1
KP03480510201	**KP03480710201**	10	M20 x 1,5	20	70	50	35	18	6	12	30	2,8 x 30°	20	60	1
KP03480512201	**KP03480712201**	12	M20 x 1,5	20	70	50	35	18	6	12	30	3 x 30°	20	60	1

MATERIAL - SURFACE TREATMENT
Body: AISI303 (Stainless steel)
Indexing pin: AISI303 (Stainless steel) ground

NOTES
Cam action indexing plungers are used when the indexing pin must not project all the time. Turning the handle 180° retracts the pin, and a notch ensures that the handle remains in position.

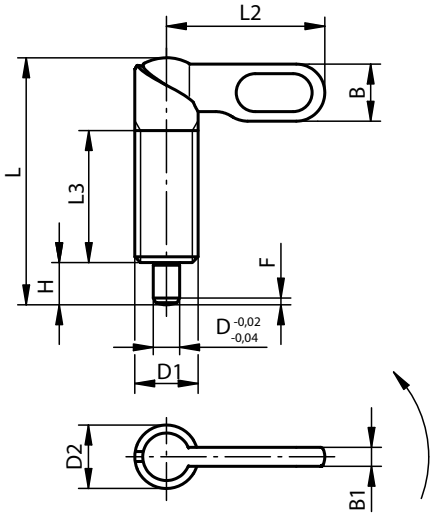

TYPE A
unpainted knob
without nut

Code type A	D	D1	D2	L	L2	L3	B	B1	H	F	Spring force initial pressure F1 (approx. N)	Spring force final pressure F2 (approx. N)	Package (pcs)
KP06371040410	4	M10	10	38	25	20	9	3	6	1 x 30°	8	14	1
KP06371040510	5	M10	10	38	25	20	9	3	6	1,3 x 30°	8	14	1
KP06371040610	6	M10	10	38	25	20	9	3	6	1,8 x 30°	8	14	1
KP063710404101	4	M10 x 1	10	38	25	20	9	3	6	1 x 30°	8	14	1
KP063710405101	5	M10 x 1	10	38	25	20	9	3	6	1,3 x 30°	8	14	1
KP063710406101	6	M10 x 1	10	38	25	20	9	3	6	1,8 x 30°	8	14	1
KP06371040512	5	M12	12	46,8	30	25	10,8	3,6	8	1,3 x 30°	8	15	1
KP06371040612	6	M12	12	46,8	30	25	10,8	3,6	8	1,8 x 30°	8	15	1
KP06371040812	8	M12	12	46,8	30	25	10,8	3,6	8	2,3 x 30°	8	15	1
KP063710405121	5	M12 x 1,5	12	46,8	30	25	10,8	3,6	8	1,3 x 30°	8	15	1
KP063710406121	6	M12 x 1,5	12	46,8	30	25	10,8	3,6	8	1,8 x 30°	8	15	1
KP063710408121	8	M12 x 1,5	12	46,8	30	25	10,8	3,6	8	2,3 x 30°	8	15	1
KP06371040616	6	M16	16	60,4	40	32	14,4	4,8	10	1,8 x 30°	15	35	1
KP06371040816	8	M16	16	60,4	40	32	14,4	4,8	10	2,3 x 30°	15	35	1
KP06371041016	10	M16	16	60,4	40	32	14,4	4,8	10	2,8 x 30°	15	35	1
KP063710406161	6	M16 x 1,5	16	60,4	40	32	14,4	4,8	10	1,8 x 30°	15	35	1
KP063710408161	8	M16 x 1,5	16	60,4	40	32	14,4	4,8	10	2,3 x 30°	15	35	1
KP063710410161	10	M16 x 1,5	16	60,4	40	32	14,4	4,8	10	2,8 x 30°	15	35	1
KP06371040820	8	M20	20	70	50	35	18	6	12	2,3 x 30°	20	60	1
KP06371041020	10	M20	20	70	50	35	18	6	12	2,8 x 30°	20	60	1
KP06371041220	12	M20	20	70	50	35	18	6	12	3 x 30°	20	60	1
KP063710408201	8	M20 x 1,5	20	70	50	35	18	6	12	2,3 x 30°	20	60	1
KP063710410201	10	M20 x 1,5	20	70	50	35	18	6	12	2,8 x 30°	20	60	1
KP063710412201	12	M20 x 1,5	20	70	50	35	18	6	12	3 x 30°	20	60	1

CAM ACTION INDEXING PLUNGER
stainless steel

MATERIAL - SURFACE TREATMENT
Body: AISI303 (Stainless steel)
Indexing pin: AISI303 (Stainless steel) ground

NOTES
Cam action indexing plungers are used when the indexing pin must not project all the time. Turning the handle 180° retracts the pin, and a notch ensures that the handle remains in position.

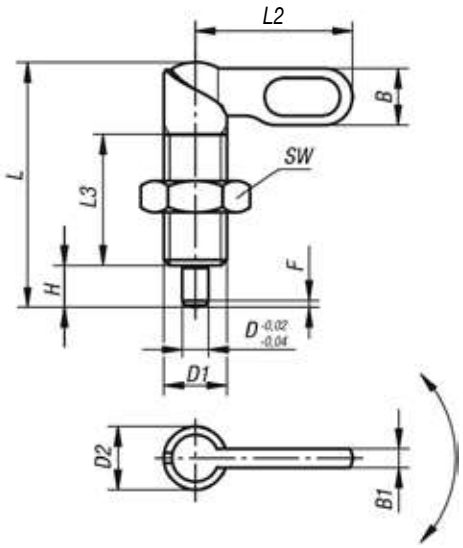

TYPE B
unpainted knob with nut

Code type B	D	D1	D2	L	L2	L3	B	B1	H	SW	F	Spring force initial pressure F1 (approx. N)	Spring force final pressure F2 (approx. N)	Package (pcs)
KP06371050410	4	M10	10	38	25	20	9	3	6	17	1 x 30°	8	14	1
KP06371050510	5	M10	10	38	25	20	9	3	6	17	1,3 x 30°	8	14	1
KP06371050610	6	M10	10	38	25	20	9	3	6	17	1,8 x 30°	8	14	1
KP063710504101	4	M10 x 1	10	38	25	20	9	3	6	17	1 x 30°	8	14	1
KP063710505101	5	M10 x 1	10	38	25	20	9	3	6	17	1,3 x 30°	8	14	1
KP063710506101	6	M10 x 1	10	38	25	20	9	3	6	17	1,8 x 30°	8	14	1
KP06371050512	5	M12	12	46,8	30	25	10,8	3,6	8	19	1,3 x 30°	8	15	1
KP06371050612	6	M12	12	46,8	30	25	10,8	3,6	8	19	1,8 x 30°	8	15	1
KP06371050812	8	M12	12	46,8	30	25	10,8	3,6	8	19	2,3 x 30°	8	15	1
KP063710505121	5	M12 x 1,5	12	46,8	30	25	10,8	3,6	8	19	1,3 x 30°	8	15	1
KP063710506121	6	M12 x 1,5	12	46,8	30	25	10,8	3,6	8	19	1,8 x 30°	8	15	1
KP063710508121	8	M12 x 1,5	12	46,8	30	25	10,8	3,6	8	19	2,3 x 30°	8	15	1
KP06371050616	6	M16	16	60,4	40	32	14,4	4,8	10	24	1,8 x 30°	15	35	1
KP06371050816	8	M16	16	60,4	40	32	14,4	4,8	10	24	2,3 x 30°	15	35	1
KP06371051016	10	M16	16	60,4	40	32	14,4	4,8	10	24	2,8 x 30°	15	35	1
KP063710506161	6	M16 x 1,5	16	60,4	40	32	14,4	4,8	10	24	1,8 x 30°	15	35	1
KP063710508161	8	M16 x 1,5	16	60,4	40	32	14,4	4,8	10	24	2,3 x 30°	15	35	1
KP063710510161	10	M16 x 1,5	16	60,4	40	32	14,4	4,8	10	24	2,8 x 30°	15	35	1
KP06371050820	8	M20	20	70	50	35	18	6	12	30	2,3 x 30°	20	60	1
KP06371051020	10	M20	20	70	50	35	18	6	12	30	2,8 x 30°	20	60	1
KP06371051220	12	M20	20	70	50	35	18	6	12	30	3 x 30°	20	60	1
KP063710508201	8	M20 x 1,5	20	70	50	35	18	6	12	30	2,3 x 30°	20	60	1
KP063710510201	10	M20 x 1,5	20	70	50	35	18	6	12	30	2,8 x 30°	20	60	1
KP063710512201	12	M20 x 1,5	20	70	50	35	18	6	12	30	3 x 30°	20	60	1

MATERIAL - SURFACE TREATMENT
Cl 5.8 (Steel) burnished

NOTES
Mounting brackets are used to aid assembly of cam action indexing plungers, as well as other elements with a matching thread, to extend their application field.

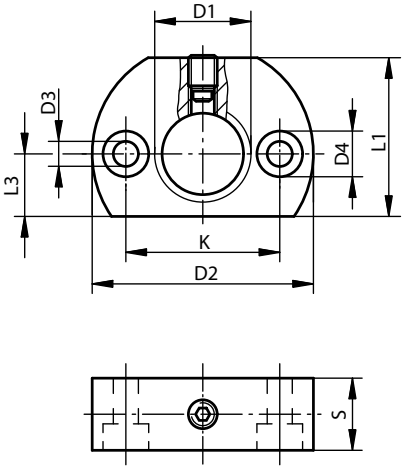

TYPE A
fastening hole parallel to indexing plunger

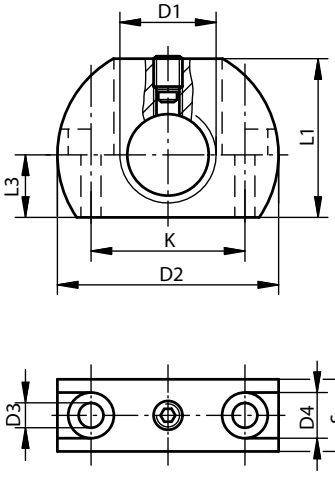

TYPE B
fastening hole perpendicular to indexing plunger

Code type A	Code type B	D1	D2	D3	D4	K	L1	L3	S	Package (pcs)
KP0638112	**KP0638212**	M12	36	5,5	10	24	25	10	12	1
KP06381121	**KP06382121**	M12 x 1,5	36	5,5	10	24	25	10	12	1
KP0638116	**KP0638216**	M16	46	5,5	10	32	33	13	15	1
KP06381161	**KP06382161**	M16 x 1,5	46	5,5	10	32	33	13	15	1
KP0638120	**KP0638220**	M20	46	5,5	10	32	33	13	15	1
KP06381201	**KP06382201**	M20 x 1,5	46	5,5	10	32	33	13	15	1

MATERIAL
Pin: AISI303 (Stainless steel)
Grip: TMP (Thermoplastic) black

NOTES
Locking pins are used to quickly fix and join parts and workpieces.

Double shear stress (F) = S · τ aB max.

ACCESSORIES
Bushing for ball lock pins KP0724...
Spiral safety cable KP0367...
Retaining cable with eyelet KP0367...
Ring KP0367...

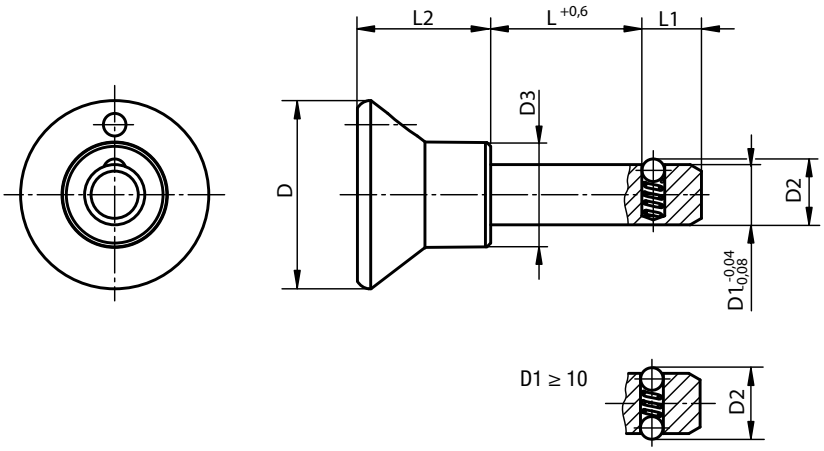

Code	D	D1	D2	D3	L	L1	L2	Housing slot H11	Shear stress double max (kN)	Package (pcs)
KP03652506010	25	6	6,5	14	10	7	17,7	6	22	1
KP03652506015	25	6	6,5	14	15	7	17,7	6	22	1
KP03652506020	25	6	6,5	14	20	7	17,7	6	22	1
KP03652506025	25	6	6,5	14	25	7	17,7	6	22	1
KP03652506030	25	6	6,5	14	30	7	17,7	6	22	1
KP03652506040	25	6	6,5	14	40	7	17,7	6	22	1
KP03652506050	25	6	6,5	14	50	7	17,7	6	22	1
KP03652508015	25	8	8,75	14	15	8	17,7	8	38	1
KP03652508020	25	8	8,75	14	20	8	17,7	8	38	1
KP03652508025	25	8	8,75	14	25	8	17,7	8	38	1
KP03652508030	25	8	8,75	14	30	8	17,7	8	38	1
KP03652508040	25	8	8,75	14	40	8	17,7	8	38	1
KP03652508050	25	8	8,75	14	50	8	17,7	8	38	1
KP03653310015	33	10	12	19	15	9	24	10	60	1
KP03653310020	33	10	12	19	20	9	24	10	60	1
KP03653310025	33	10	12	19	25	9	24	10	60	1
KP03653310030	33	10	12	19	30	9	24	10	60	1
KP03653310040	33	10	12	19	40	9	24	10	60	1
KP03653310050	33	10	12	19	50	9	24	10	60	1
KP03653312020	33	12	14,5	19	20	10	24	12	86	1
KP03653312030	33	12	14,5	19	30	10	24	12	86	1
KP03653312040	33	12	14,5	19	40	10	24	12	86	1
KP03653312050	33	12	14,5	19	50	10	24	12	86	1

MATERIAL

Pin:	AISI303 (Stainless steel)
Grip:	AISI303 (Stainless steel)
Balls:	AISI440C (Stainless steel)
Springs:	AISI301 (Stainless steel)

NOTES

Ball lock pins are used to easily fasten or join components. The two balls are disengaged by pressing the push button, and the pin can be slipped into holes in the workpieces. When the push button is released, the balls lock the connection securely.

Double shear stress (F) = S · τ aB max.

ACCESSORIES

Bushing for ball lock pins KP0724...
Spiral safety cable KP0367...
Retaining cable with eyelet KP0367...
Ring KP0367...

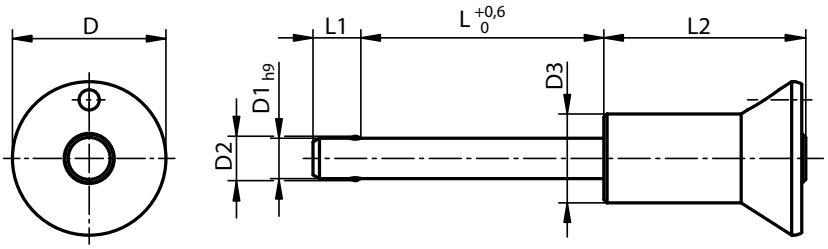

Code	D	D1	D2	D3	L	L1	L2	Housing slot H11	Shear stress double max (kN)	Package (pcs)
KP079101905010	19	5	5,5	11	10	5,9	25	5	15	1
KP079101905015	19	5	5,5	11	15	5,9	25	5	15	1
KP079101905020	19	5	5,5	11	20	5,9	25	5	15	1
KP079101905025	19	5	5,5	11	25	5,9	25	5	15	1
KP079101905030	19	5	5,5	11	30	5,9	25	5	15	1
KP079101906010	19	6	6,85	11	10	6,8	25	6	22	1
KP079101906015	19	6	6,85	11	15	6,8	25	6	22	1
KP079101906020	19	6	6,85	11	20	6,8	25	6	22	1
KP079101906025	19	6	6,85	11	25	6,8	25	6	22	1
KP079101906030	19	6	6,85	11	30	6,8	25	6	22	1
KP079101906035	19	6	6,85	11	35	6,8	25	6	22	1
KP079101906040	19	6	6,85	11	40	6,8	25	6	22	1
KP079101906045	19	6	6,85	11	45	6,8	25	6	22	1
KP079101906050	19	6	6,85	11	50	6,8	25	6	22	1
KP079102508020	25	8	9,5	14	20	7,8	33	8	38	1
KP079102508025	25	8	9,5	14	25	7,8	33	8	38	1
KP079102508030	25	8	9,5	14	30	7,8	33	8	38	1
KP079102508035	25	8	9,5	14	35	7,8	33	8	38	1
KP079102508040	25	8	9,5	14	40	7,8	33	8	38	1
KP079102508045	25	8	9,5	14	45	7,8	33	8	38	1
KP079102508050	25	8	9,5	14	50	7,8	33	8	38	1
KP079102510020	25	10	12	14	20	8,9	33	10	60	1
KP079102510025	25	10	12	14	25	8,9	33	10	60	1
KP079102510030	25	10	12	14	30	8,9	33	10	60	1
KP079102510035	25	10	12	14	35	8,9	33	10	60	1
KP079102510040	25	10	12	14	40	8,9	33	10	60	1
KP079102510045	25	10	12	14	45	8,9	33	10	60	1
KP079102510050	25	10	12	14	50	8,9	33	10	60	1
KP079102510060	25	10	12	14	60	8,9	33	10	60	1

BALL LOCK PIN
stainless steel

MATERIAL

Pin:	AISI303 (Stainless steel)
Grip:	AISI303 (Stainless steel)
Balls:	AISI440C (Stainless steel)
Springs:	AISI301 (Stainless steel)

NOTES

Ball lock pins are used to easily fasten or join components. The two balls are disengaged by pressing the push button, and the pin can be slipped into holes in the workpieces. When the push button is released, the balls lock the connection securely.

Double shear stress (F) = S · τ aB max.

ACCESSORIES

Bushing for ball lock pins KP0724...
Spiral safety cable KP0367...
Retaining cable with eyelet KP0367...
Ring KP0367...

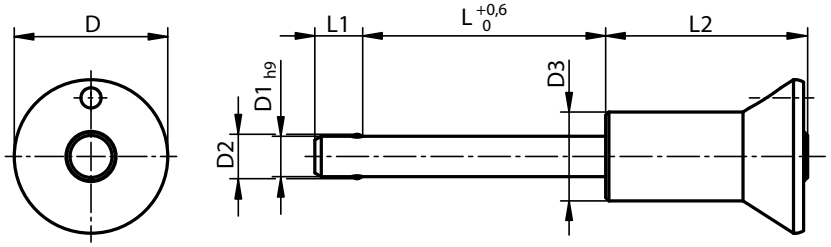

Code	D	D1	D2	D3	L	L1	L2	Housing slot H11	Shear stress double max (kN)	Package (pcs)
KP079103512025	35	12	14,5	22	25	9,9	39,5	12	86	1
KP079103512030	35	12	14,5	22	30	9,9	39,5	12	86	1
KP079103512035	35	12	14,5	22	35	9,9	39,5	12	86	1
KP079103512040	35	12	14,5	22	40	9,9	39,5	12	86	1
KP079103512045	35	12	14,5	22	45	9,9	39,5	12	86	1
KP079103512050	35	12	14,5	22	50	9,9	39,5	12	86	1
KP079103512060	35	12	14,5	22	60	9,9	39,5	12	86	1
KP079103512070	35	12	14,5	22	70	9,9	39,5	12	86	1
KP079103512080	35	12	14,5	22	80	9,9	39,5	12	86	1
KP079103516030	35	16	19	22	30	13,1	39,5	16	153	1
KP079103516035	35	16	19	22	35	13,1	39,5	16	153	1
KP079103516040	35	16	19	22	40	13,1	39,5	16	153	1
KP079103516045	35	16	19	22	45	13,1	39,5	16	153	1
KP079103516050	35	16	19	22	50	13,1	39,5	16	153	1
KP079103516060	35	16	19	22	60	13,1	39,5	16	153	1
KP079103516070	35	16	19	22	70	13,1	39,5	16	153	1
KP079103516080	35	16	19	22	80	13,1	39,5	16	153	1

MATERIAL

Pin:	AISI630 (Stainless steel) tempered
Button:	AISI303 (Stainless steel)
Balls:	AISI440C (Stainless steel)
Springs:	AISI301 (Stainless steel)
Grip:	TMP (Thermoplastic) black

NOTES

Ball lock pins are used to easily fasten or join components. The two balls are disengaged by pressing the push button, and the pin can be slipped into holes in the workpieces. When the push button is released, the balls lock the connection securely.

Double shear stress (F) = S · τ aB max

Also available with Red RAL 3020 grip.

ACCESSORIES

Bushing for ball lock pins KP0724...
Spiral safety cable KP0367...
Retaining cable with eyelet KP0367...
Ring KP0367...

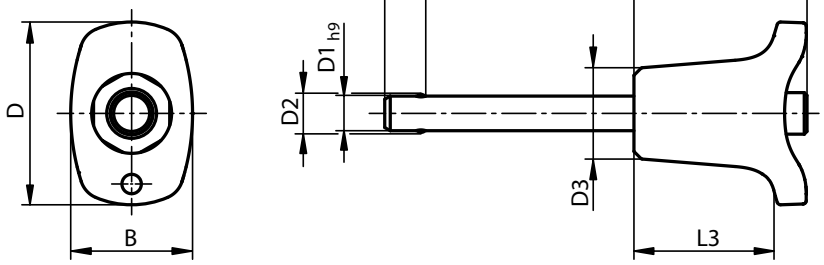

Code	B	D	D1	D2	D3	L	L1	L2	L3	Housing slot H11	Shear stress double max (kN)	Package (pcs)
KP0792002605010	17,6	26,4	5	5,5	13,2	10	5,9	25	20,2	5	15	1
KP0792002605015	17,6	26,4	5	5,5	13,2	15	5,9	25	20,2	5	15	1
KP0792002605020	17,6	26,4	5	5,5	13,2	20	5,9	25	20,2	5	15	1
KP0792002605025	17,6	26,4	5	5,5	13,2	25	5,9	25	20,2	5	15	1
KP0792002605030	17,6	26,4	5	5,5	13,2	30	5,9	25	20,2	5	15	1
KP0792002606010	17,6	26,4	6	6,55	13,2	10	6,8	25	20,2	6	22	1
KP0792002606015	17,6	26,4	6	6,55	13,2	15	6,8	25	20,2	6	22	1
KP0792002606020	17,6	26,4	6	6,55	13,2	20	6,8	25	20,2	6	22	1
KP0792002606025	17,6	26,4	6	6,55	13,2	25	6,8	25	20,2	6	22	1
KP0792002606030	17,6	26,4	6	6,55	13,2	30	6,8	25	20,2	6	22	1
KP0792002606035	17,6	26,4	6	6,55	13,2	35	6,8	25	20,2	6	22	1
KP0792002606040	17,6	26,4	6	6,55	13,2	40	6,8	25	20,2	6	22	1
KP0792002606045	17,6	26,4	6	6,55	13,2	45	6,8	25	20,2	6	22	1
KP0792002606050	17,6	26,4	6	6,55	13,2	50	6,8	25	20,2	6	22	1
KP0792003308020	23	33,2	8	9,5	17,3	20	7,8	33	26,1	8	38	1
KP0792003308025	23	33,2	8	9,5	17,3	25	7,8	33	26,1	8	38	1
KP0792003308030	23	33,2	8	9,5	17,3	30	7,8	33	26,1	8	38	1
KP0792003308035	23	33,2	8	9,5	17,3	35	7,8	33	26,1	8	38	1
KP0792003308040	23	33,2	8	9,5	17,3	40	7,8	33	26,1	8	38	1
KP0792003308045	23	33,2	8	9,5	17,3	45	7,8	33	26,1	8	38	1
KP0792003308050	23	33,2	8	9,5	17,3	50	7,8	33	26,1	8	38	1
KP0792003310020	23	33,2	10	12	17,3	20	8,9	33	26,1	10	60	1
KP0792003310025	23	33,2	10	12	17,3	25	8,9	33	26,1	10	60	1
KP0792003310030	23	33,2	10	12	17,3	30	8,9	33	26,1	10	60	1
KP0792003310035	23	33,2	10	12	17,3	35	8,9	33	26,1	10	60	1
KP0792003310040	23	33,2	10	12	17,3	40	8,9	33	26,1	10	60	1
KP0792003310045	23	33,2	10	12	17,3	45	8,9	33	26,1	10	60	1
KP0792003310050	23	33,2	10	12	17,3	50	8,9	33	26,1	10	60	1
KP0792003310060	23	33,2	10	12	17,3	60	8,9	33	26,1	10	60	1

MATERIAL

Pin:	AISI630 (Stainless steel) tempered
Button:	AISI303 (Stainless steel)
Balls:	AISI440C (Stainless steel)
Springs:	AISI301 (Stainless steel)
Grip:	TMP (Thermoplastic) nera

NOTES

Ball lock pins are used to easily fasten or join components. The two balls are disengaged by pressing the push button, and the pin can be slipped into holes in the workpieces. When the push button is released, the balls lock the connection securely.

Double shear stress (F) = S · τ aB max

Also available with Red RAL 3020 grip.

ACCESSORIES

Bushing for ball lock pins KP0724...
Spiral safety cable KP0367...
Retaining cable with eyelet KP0367...
Ring KP0367...

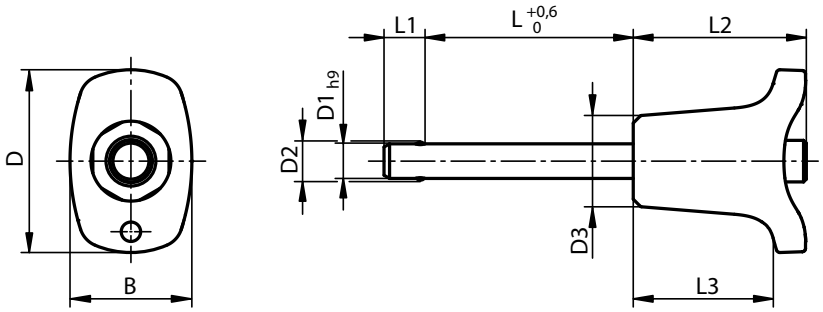

Code	B	D	D1	D2	D3	L	L1	L2	L3	Housing slot H11	Shear stress double max (kN)	Package (pcs)
KP0792004612025	33	45,9	12	14,5	26,3	25	9,9	39,5	31,3	12	86	1
KP0792004612030	33	45,9	12	14,5	26,3	30	9,9	39,5	31,3	12	86	1
KP0792004612035	33	45,9	12	14,5	26,3	35	9,9	39,5	31,3	12	86	1
KP0792004612040	33	45,9	12	14,5	26,3	40	9,9	39,5	31,3	12	86	1
KP0792004612045	33	45,9	12	14,5	26,3	45	9,9	39,5	31,3	12	86	1
KP0792004612050	33	45,9	12	14,5	26,3	50	9,9	39,5	31,3	12	86	1
KP0792004612060	33	45,9	12	14,5	26,3	60	9,9	39,5	31,3	12	86	1
KP0792004612070	33	45,9	12	14,5	26,3	70	9,9	39,5	31,3	12	86	1
KP0792004612080	33	45,9	12	14,5	26,3	80	9,9	39,5	31,3	12	86	1
KP0792004616030	33	45,9	16	19	26,3	30	13,1	39,5	31,3	16	153	1
KP0792004616035	33	45,9	16	19	26,3	35	13,1	39,5	31,3	16	153	1
KP0792004616040	33	45,9	16	19	26,3	40	13,1	39,5	31,3	16	153	1
KP0792004616045	33	45,9	16	19	26,3	45	13,1	39,5	31,3	16	153	1
KP0792004616050	33	45,9	16	19	26,3	50	13,1	39,5	31,3	16	153	1
KP0792004616060	33	45,9	16	19	26,3	60	13,1	39,5	31,3	16	153	1
KP0792004616070	33	45,9	16	19	26,3	70	13,1	39,5	31,3	16	153	1
KP0792004616080	33	45,9	16	19	26,3	80	13,1	39,5	31,3	16	153	1

MATERIAL

Pin:	AISI303 (Stainless steel)
Button:	AISI303 (Stainless steel)
Balls:	AISI440C (Stainless steel)
Springs:	AISI301 (Stainless steel)
Grip:	TMP (Thermoplastic) black

NOTES

Ball lock pins are used to easily fasten or join components. The two balls are disengaged by pressing the push button, and the pin can be slipped into holes in the workpieces. When the push button is released, the balls lock the connection securely.

Double shear stress (F) = S · τ aB max

Also available with Red RAL 3020 grip.

ACCESSORIES

Bushing for ball lock pins KP0724...
Spiral safety cable KP0367...
Retaining cable with eyelet KP0367...
Ring KP0367...

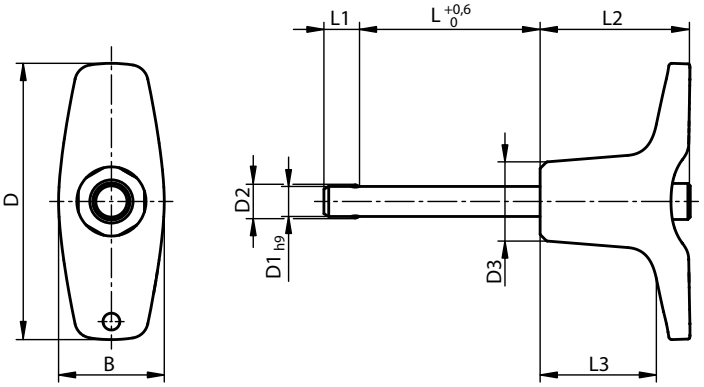

Code	B	D	D1	D2	D3	L	L1	L2	L3	Housing slot H11	Shear stress double max (kN)	Package (pcs)
KP0792204605010	17,6	46	5	5,5	13,2	10	5,9	25	19,4	5	15	1
KP0792204605015	17,6	46	5	5,5	13,2	15	5,9	25	19,4	5	15	1
KP0792204605020	17,6	46	5	5,5	13,2	20	5,9	25	19,4	5	15	1
KP0792204605025	17,6	46	5	5,5	13,2	25	5,9	25	19,4	5	15	1
KP0792204605030	17,6	46	5	5,5	13,2	30	5,9	25	19,4	5	15	1
KP0792204606010	17,6	46	6	6,85	13,2	10	6,8	25	19,4	6	22	1
KP0792204606015	17,6	46	6	6,85	13,2	15	6,8	25	19,4	6	22	1
KP0792204606020	17,6	46	6	6,85	13,2	20	6,8	25	19,4	6	22	1
KP0792204606025	17,6	46	6	6,85	13,2	25	6,8	25	19,4	6	22	1
KP0792204606030	17,6	46	6	6,85	13,2	30	6,8	25	19,4	6	22	1
KP0792204606035	17,6	46	6	6,85	13,2	35	6,8	25	19,4	6	22	1
KP0792204606040	17,6	46	6	6,85	13,2	40	6,8	25	19,4	6	22	1
KP0792204606045	17,6	46	6	6,85	13,2	45	6,8	25	19,4	6	22	1
KP0792204606050	17,6	46	6	6,85	13,2	50	6,8	25	19,4	6	22	1
KP0792206308020	23	62,9	8	9,5	17,3	20	7,8	33	24,4	8	38	1
KP0792206308025	23	62,9	8	9,5	17,3	25	7,8	33	24,4	8	38	1
KP0792206308030	23	62,9	8	9,5	17,3	30	7,8	33	24,4	8	38	1
KP0792206308035	23	62,9	8	9,5	17,3	35	7,8	33	24,4	8	38	1
KP0792206308040	23	62,9	8	9,5	17,3	40	7,8	33	24,4	8	38	1
KP0792206308045	23	62,9	8	9,5	17,3	45	7,8	33	24,4	8	38	1
KP0792206308050	23	62,9	8	9,5	17,3	50	7,8	33	24,4	8	38	1
KP0792206310020	23	62,9	10	12	17,3	20	8,9	33	24,4	10	60	1
KP0792206310025	23	62,9	10	12	17,3	25	8,9	33	24,4	10	60	1
KP0792206310030	23	62,9	10	12	17,3	30	8,9	33	24,4	10	60	1
KP0792206310035	23	62,9	10	12	17,3	35	8,9	33	24,4	10	60	1
KP0792206310040	23	62,9	10	12	17,3	40	8,9	33	24,4	10	60	1
KP0792206310045	23	62,9	10	12	17,3	45	8,9	33	24,4	10	60	1
KP0792206310050	23	62,9	10	12	17,3	50	8,9	33	24,4	10	60	1
KP0792206310060	23	62,9	10	12	17,3	60	8,9	33	24,4	10	60	1

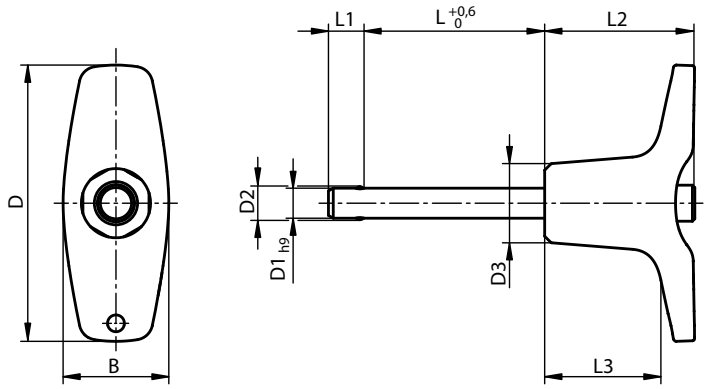

MATERIAL

Pin:	AISI303 (Stainless steel)
Button:	AISI303 (Stainless steel)
Balls:	AISI440C (Stainless steel)
Springs:	AISI301 (Stainless steel)
Grip:	TMP (Thermoplastic) black

NOTES

Ball lock pins are used to easily fasten or join components. The two balls are disengaged by pressing the push button, and the pin can be slipped into holes in the workpieces. When the push button is released, the balls lock the connection securely.

Double shear stress (F) = S · τ aB max

Also available with Red RAL 3020 grip.

ACCESSORIES

Bushing for ball lock pins KP0724...
Spiral safety cable KP0367...
Retaining cable with eyelet KP0367...
Ring KP0367...

Code	B	D	D1	D2	D3	L	L1	L2	L3	Housing slot H11	Shear stress double max (kN)	Package (pcs)
KP0792208212025	33	81,8	12	14,5	26,3	25	9,9	39,5	28,8	12	86	1
KP0792208212030	33	81,8	12	14,5	26,3	30	9,9	39,5	28,8	12	86	1
KP0792208212035	33	81,8	12	14,5	26,3	35	9,9	39,5	28,8	12	86	1
KP0792208212040	33	81,8	12	14,5	26,3	40	9,9	39,5	28,8	12	86	1
KP0792208212045	33	81,8	12	14,5	26,3	45	9,9	39,5	28,8	12	86	1
KP0792208212050	33	81,8	12	14,5	26,3	50	9,9	39,5	28,8	12	86	1
KP0792208212060	33	81,8	12	14,5	26,3	60	9,9	39,5	28,8	12	86	1
KP0792208212070	33	81,8	12	14,5	26,3	70	9,9	39,5	28,8	12	86	1
KP0792208212080	33	81,8	12	14,5	26,3	80	9,9	39,5	28,8	12	86	1
KP0792208216030	33	81,8	14	19	26,3	30	13,1	39,5	28,8	16	153	1
KP0792208216035	33	81,8	14	19	26,3	35	13,1	39,5	28,8	16	153	1
KP0792208216040	33	81,8	14	19	26,3	40	13,1	39,5	28,8	16	153	1
KP0792208216045	33	81,8	14	19	26,3	45	13,1	39,5	28,8	16	153	1
KP0792208216050	33	81,8	14	19	26,3	50	13,1	39,5	28,8	16	153	1
KP0792208216060	33	81,8	14	19	26,3	60	13,1	39,5	28,8	16	153	1
KP0792208216070	33	81,8	14	19	26,3	70	13,1	39,5	28,8	16	153	1
KP0792208216080	33	81,8	14	19	26,3	80	13,1	39,5	28,8	16	153	1

MATERIAL

Pin:	AISI303 (Stainless steel)
Button:	AISI303 (Stainless steel)
Balls:	AISI440C (Stainless steel)
Springs:	AISI301 (Stainless steel)
Grip:	TMP (Thermoplastic) black

NOTES

Ball lock pins are used to easily fasten or join components. The two balls are disengaged by pressing the push button, and the pin can be slipped into holes in the workpieces. When the push button is released, the balls lock the connection securely.

Double shear stress (F) = S · τ aB max

Also available with Red RAL 3020 grip.

ACCESSORIES

Bushing for ball lock pins KP0724...
Spiral safety cable KP0367...
Retaining cable with eyelet KP0367...
Ring KP0367...

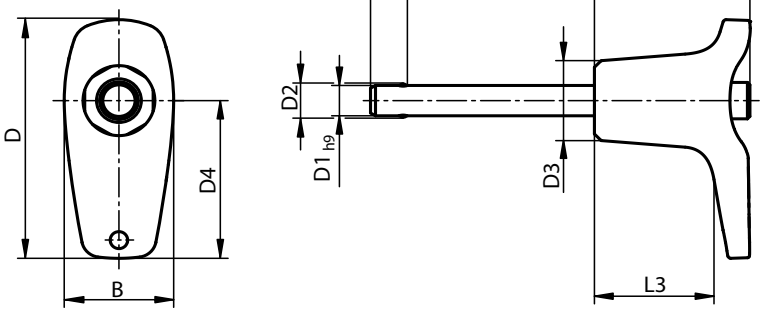

Code	B	D	D1	D2	D3	D4	L	L1	L2	L3	Housing slot H11	Shear stress double max (kN)	Package (pcs)
KP0792102605010	17,6	39,3	5	5,5	13,2	26	10	5,9	25	19,2	5	15	1
KP0792102605015	17,6	39,3	5	5,5	13,2	26	15	5,9	25	19,2	5	15	1
KP0792102605020	17,6	39,3	5	5,5	13,2	26	20	5,9	25	19,2	5	15	1
KP0792102605025	17,6	39,3	5	5,5	13,2	26	25	5,9	25	19,2	5	15	1
KP0792102605030	17,6	39,3	5	5,5	13,2	26	30	5,9	25	19,2	5	15	1
KP0792102606010	17,6	39,3	6	6,85	13,2	26	10	6,8	25	19,2	6	22	1
KP0792102606015	17,6	39,3	6	6,85	13,2	26	15	6,8	25	19,2	6	22	1
KP0792102606020	17,6	39,3	6	6,85	13,2	26	20	6,8	25	19,2	6	22	1
KP0792102606025	17,6	39,3	6	6,85	13,2	26	25	6,8	25	19,2	6	22	1
KP0792102606030	17,6	39,3	6	6,85	13,2	26	30	6,8	25	19,2	6	22	1
KP0792102606035	17,6	39,3	6	6,85	13,2	26	35	6,8	25	19,2	6	22	1
KP0792102606040	17,6	39,3	6	6,85	13,2	26	40	6,8	25	19,2	6	22	1
KP0792102606045	17,6	39,3	6	6,85	13,2	26	45	6,8	25	19,2	6	22	1
KP0792102606050	17,6	39,3	6	6,85	13,2	26	50	6,8	25	19,2	6	22	1
KP0792103508020	23	52,2	8	9,5	17,3	35,4	20	7,8	33	24,2	8	38	1
KP0792103508025	23	52,2	8	9,5	17,3	35,4	25	7,8	33	24,2	8	38	1
KP0792103508030	23	52,2	8	9,5	17,3	35,4	30	7,8	33	24,2	8	38	1
KP0792103508035	23	52,2	8	9,5	17,3	35,4	35	7,8	33	24,2	8	38	1
KP0792103508040	23	52,2	8	9,5	17,3	35,4	40	7,8	33	24,2	8	38	1
KP0792103508045	23	52,2	8	9,5	17,3	35,4	45	7,8	33	24,2	8	38	1
KP0792103508050	23	52,2	8	9,5	17,3	35,4	50	7,8	33	24,2	8	38	1
KP0792103510020	23	52,2	10	12	17,3	35,4	20	8,9	33	24,2	10	60	1
KP0792103510025	23	52,2	10	12	17,3	35,4	25	8,9	33	24,2	10	60	1
KP0792103510030	23	52,2	10	12	17,3	35,4	30	8,9	33	24,2	10	60	1
KP0792103510035	23	52,2	10	12	17,3	35,4	35	8,9	33	24,2	10	60	1
KP0792103510040	23	52,2	10	12	17,3	35,4	40	8,9	33	24,2	10	60	1
KP0792103510045	23	52,2	10	12	17,3	35,4	45	8,9	33	24,2	10	60	1
KP0792103510050	23	52,2	10	12	17,3	35,4	50	8,9	33	24,2	10	60	1
KP0792103510060	23	52,2	10	12	17,3	35,4	60	8,9	33	24,2	10	60	1
KP0792104712025	33	70,2	12	14,5	26,3	47	25	9,9	39,5	28,4	12	86	1
KP0792104712030	33	70,2	12	14,5	26,3	47	30	9,9	39,5	28,4	12	86	1
KP0792104712035	33	70,2	12	14,5	26,3	47	35	9,9	39,5	28,4	12	86	1
KP0792104712040	33	70,2	12	14,5	26,3	47	40	9,9	39,5	28,4	12	86	1
KP0792104712045	33	70,2	12	14,5	26,3	47	45	9,9	39,5	28,4	12	86	1
KP0792104712050	33	70,2	12	14,5	26,3	47	50	9,9	39,5	28,4	12	86	1
KP0792104712060	33	70,2	12	14,5	26,3	47	60	9,9	39,5	28,4	12	86	1
KP0792104712070	33	70,2	12	14,5	26,3	47	70	9,9	39,5	28,4	12	86	1
KP0792104712080	33	70,2	12	14,5	26,3	47	80	9,9	39,5	28,4	12	86	1

BALL LOCK PIN - T-GRIP
aluminium

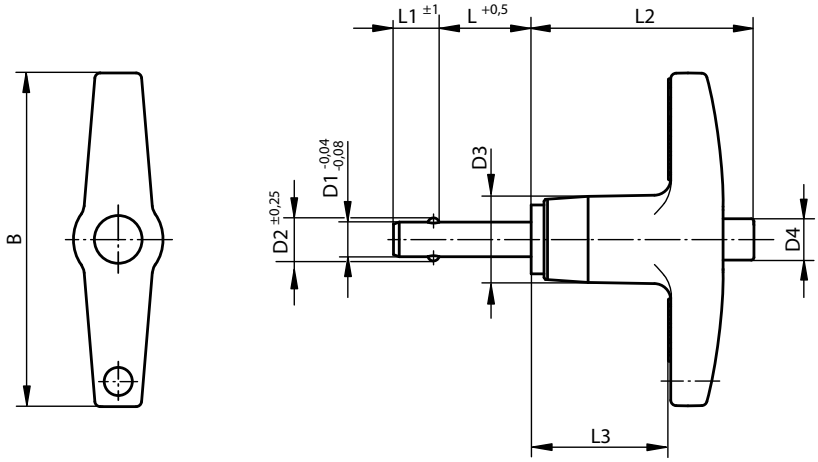

MATERIAL

Pin:	AISI630 (Stainless steel) tempered
Button:	EN-AW 2024 T4 (Aluminium) anodized blue
Balls:	AISI440C (Stainless steel) tempered and passivated
Springs:	AISI301 (Stainless steel) tempered
Grip:	EN-AC-46000 (Aluminium) die-cast, anodized black

NOTES

Ball lock pins are used to easily fasten or join components. The two balls are disengaged by pressing the push button, and the pin can be slipped into holes in the workpieces. When the push button is released, the balls lock the connection securely.
The hardened, high-tensile stainless steel pin permits extreme loads with low wear.

Double shear stress (F) = S · τ aB max

ACCESSORIES

Bushing for ball lock pins KP0724...
Spiral safety cable KP0367...
Retaining cable with eyelet KP0367...
Ring KP0367...

Code	B	D1	D2	D3	D4	L	L1	L2	L3	Housing slot H11	Shear stress double max (kN)	Package (pcs)
KP036624605010	46	5	5,54	11,9	5,8	10	6	30,7	19,3	5	24,4	1
KP036624605015	46	5	5,54	11,9	5,8	15	6	30,7	19,3	5	24,4	1
KP036624605020	46	5	5,54	11,9	5,8	20	6	30,7	19,3	5	24,4	1
KP036624605025	46	5	5,54	11,9	5,8	25	6	30,7	19,3	5	24,4	1
KP036624605030	46	5	5,54	11,9	5,8	30	6	30,7	19,3	5	24,4	1
KP036624605035	46	5	5,54	11,9	5,8	35	6	30,7	19,3	5	24,4	1
KP036624605040	46	5	5,54	11,9	5,8	40	6	30,7	19,3	5	24,4	1
KP036624605050	46	5	5,54	11,9	5,8	50	6	30,7	19,3	5	24,4	1
KP036624605060	46	5	5,54	11,9	5,8	60	6	30,7	19,3	5	24,4	1
KP036624605070	46	5	5,54	11,9	5,8	70	6	30,7	19,3	5	24,4	1
KP036624606010	46	6	6,99	11,9	5,8	10	7	30,7	19,3	6	35,64	1
KP036624606015	46	6	6,99	11,9	5,8	15	7	30,7	19,3	6	35,64	1
KP036624606020	46	6	6,99	11,9	5,8	20	7	30,7	19,3	6	35,64	1
KP036624606025	46	6	6,99	11,9	5,8	25	7	30,7	19,3	6	35,64	1
KP036624606030	46	6	6,99	11,9	5,8	30	7	30,7	19,3	6	35,64	1
KP036624606035	46	6	6,99	11,9	5,8	35	7	30,7	19,3	6	35,64	1
KP036624606040	46	6	6,99	11,9	5,8	40	7	30,7	19,3	6	35,64	1
KP036624606050	46	6	6,99	11,9	5,8	50	7	30,7	19,3	6	35,64	1
KP036624606060	46	6	6,99	11,9	5,8	60	7	30,7	19,3	6	35,64	1
KP036624606070	46	6	6,99	11,9	5,8	70	7	30,7	19,3	6	35,64	1
KP036624606080	46	6	6,99	11,9	5,8	80	7	30,7	19,3	6	35,64	1
KP036624608010	46	8	9,42	11,9	5,8	10	8	30,7	19,3	8	63,8	1
KP036624608015	46	8	9,42	11,9	5,8	15	8	30,7	19,3	8	63,8	1
KP036624608020	46	8	9,42	11,9	5,8	20	8	30,7	19,3	8	63,8	1
KP036624608025	46	8	9,42	11,9	5,8	25	8	30,7	19,3	8	63,8	1
KP036624608030	46	8	9,42	11,9	5,8	30	8	30,7	19,3	8	63,8	1
KP036624608035	46	8	9,42	11,9	5,8	35	8	30,7	19,3	8	63,8	1
KP036624608040	46	8	9,42	11,9	5,8	40	8	30,7	19,3	8	63,8	1
KP036624608050	46	8	9,42	11,9	5,8	50	8	30,7	19,3	8	63,8	1
KP036624608060	46	8	9,42	11,9	5,8	60	8	30,7	19,3	8	63,8	1
KP036624608070	46	8	9,42	11,9	5,8	70	8	30,7	19,3	8	63,8	1
KP036624608080	46	8	9,42	11,9	5,8	80	8	30,7	19,3	8	63,8	1
KP036625110015	50,8	10	11,86	14,2	7,4	15	9	34,8	22,1	10	100,1	1
KP036625110020	50,8	10	11,86	14,2	7,4	20	9	34,8	22,1	10	100,1	1

MATERIAL
Pin: AISI630 (Stainless steel) tempered
Button: EN-AW 2024 T4 (Aluminium) anodized blue
Balls: AISI440C (Stainless steel) tempered and passivated
Springs: AISI301(Stainless steel) tempered
Grip: EN-AC-46000 (Aluminium) die-cast, anodized black

NOTES
Ball lock pins are used to easily fasten or join components. The two balls are disengaged by pressing the push button, and the pin can be slipped into holes in the workpieces. When the push button is released, the balls lock the connection securely.
The hardened, high-tensile stainless steel pin permits extreme loads with low wear.

Double shear stress (F) = S · τ aB max

ACCESSORIES
Bushing for ball lock pins KP0724...
Spiral safety cable KP0367...
Retaining cable with eyelet KP0367...
Ring KP0367...

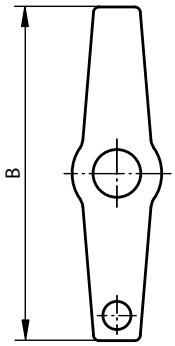

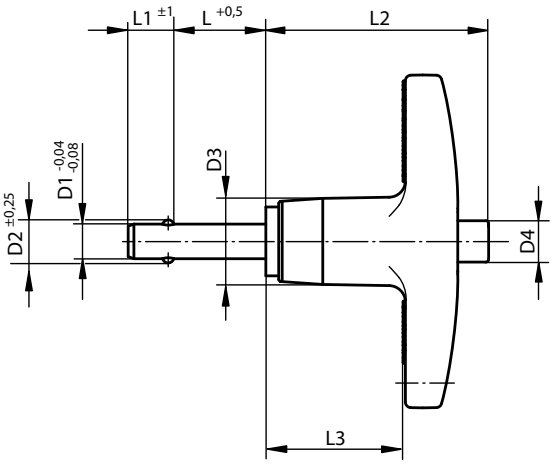

Code	B	D1	D2	D3	D4	L	L1	L2	L3	Housing slot H11	Shear stress double max (kN)	Package (pcs)
KP036625110025	50,8	10	11,86	14,2	7,4	25	9	34,8	22,1	10	100,1	1
KP036625110030	50,8	10	11,86	14,2	7,4	30	9	34,8	22,1	10	100,1	1
KP036625110035	50,8	10	11,86	14,2	7,4	35	9	34,8	22,1	10	100,1	1
KP036625110040	50,8	10	11,86	14,2	7,4	40	9	34,8	22,1	10	100,1	1
KP036625110050	50,8	10	11,86	14,2	7,4	50	9	34,8	22,1	10	100,1	1
KP036625110060	50,8	10	11,86	14,2	7,4	60	9	34,8	22,1	10	100,1	1
KP036625110070	50,8	10	11,86	14,2	7,4	70	9	34,8	22,1	10	100,1	1
KP036625110080	50,8	10	11,86	14,2	7,4	80	9	34,8	22,1	10	100,1	1
KP036625110090	50,8	10	11,86	14,2	7,4	90	9	34,8	22,1	10	100,1	1
KP036625110100	50,8	10	11,86	14,2	7,4	100	9	34,8	22,1	10	100,1	1
KP036625812020	57,2	12	14,45	18,3	10,7	20	10	40,6	25,4	12	144,06	1
KP036625812025	57,2	12	14,45	18,3	10,7	25	10	40,6	25,4	12	144,06	1
KP036625812030	57,2	12	14,45	18,3	10,7	30	10	40,6	25,4	12	144,06	1
KP036625812035	57,2	12	14,45	18,3	10,7	35	10	40,6	25,4	12	144,06	1
KP036625812040	57,2	12	14,45	18,3	10,7	40	10	40,6	25,4	12	144,06	1
KP036625812050	57,2	12	14,45	18,3	10,7	50	10	40,6	25,4	12	144,06	1
KP036625812060	57,2	12	14,45	18,3	10,7	60	10	40,6	25,4	12	144,06	1
KP036625812070	57,2	12	14,45	18,3	10,7	70	10	40,6	25,4	12	144,06	1
KP036625812080	57,2	12	14,45	18,3	10,7	80	10	40,6	25,4	12	144,06	1
KP036625812090	57,2	12	14,45	18,3	10,7	90	10	40,6	25,4	12	144,06	1
KP036625812100	57,2	12	14,45	18,3	10,7	100	10	40,6	25,4	12	144,06	1
KP036627816025	78	16	19	23,9	13,7	25	14	45	28,2	16	257,18	1
KP036627816030	78	16	19	23,9	13,7	30	14	45	28,2	16	257,18	1
KP036627816035	78	16	19	23,9	13,7	35	14	45	28,2	16	257,18	1
KP036627816040	78	16	19	23,9	13,7	40	14	45	28,2	16	257,18	1
KP036627816050	78	16	19	23,9	13,7	50	14	45	28,2	16	257,18	1
KP036627816060	78	16	19	23,9	13,7	60	14	45	28,2	16	257,18	1
KP036627816070	78	16	19	23,9	13,7	70	14	45	28,2	16	257,18	1
KP036627816080	78	16	19	23,9	13,7	80	14	45	28,2	16	257,18	1
KP036627816090	78	16	19	23,9	13,7	90	14	45	28,2	16	257,18	1
KP036627816100	78	16	19	23,9	13,7	100	14	45	28,2	16	257,18	1

BALL LOCK PIN - L-GRIP
aluminium

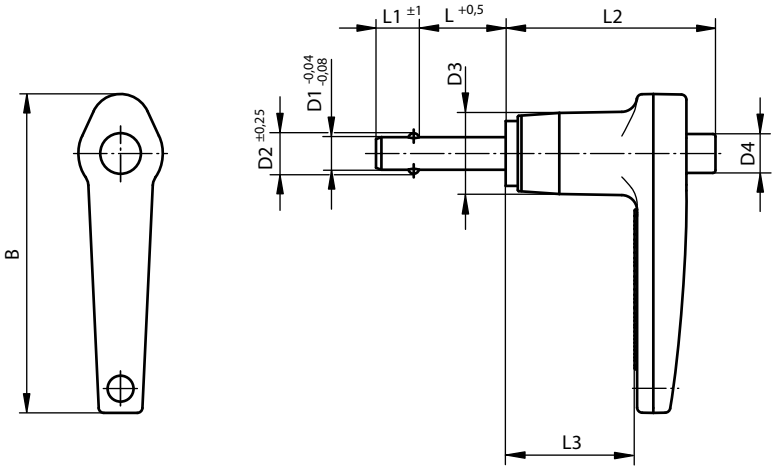

MATERIAL

Pin: AISI630 (Stainless steel) tempered
Button: EN-AW 2024 T4 (Aluminium) anodized blue
Balls: AISI440C (Stainless steel) tempered and passivated
Springs: AISI301 (Stainless steel) tempered
Grip: EN-AC-46000 (Aluminium) die-cast, anodized black

NOTES

Ball lock pins are used to easily fasten or join components. The two balls are disengaged by pressing the push button, and the pin can be slipped into holes in the workpieces. When the push button is released, the balls lock the connection securely.
The hardened, high-tensile stainless steel pin permits extreme loads with low wear.

Double shear stress (F) = S · τ aB max

ACCESSORIES

Bushing for ball lock pins KP0724...
Spiral safety cable KP0367...
Retaining cable with eyelet KP0367...
Ring KP0367...

Code	B	D1	D2	D3	D4	L	L1	L2	L3	Housing slot H11	Shear stress double max (kN)	Package (pcs)
KP064214405010	46,7	5	5,54	11,9	5,8	10	6	30,7	19,3	5	24,4	1
KP064214405015	46,7	5	5,54	11,9	5,8	15	6	30,7	19,3	5	24,4	1
KP064214405020	46,7	5	5,54	11,9	5,8	20	6	30,7	19,3	5	24,4	1
KP064214405025	46,7	5	5,54	11,9	5,8	25	6	30,7	19,3	5	24,4	1
KP064214405030	46,7	5	5,54	11,9	5,8	30	6	30,7	19,3	5	24,4	1
KP064214405035	46,7	5	5,54	11,9	5,8	35	6	30,7	19,3	5	24,4	1
KP064214405040	46,7	5	5,54	11,9	5,8	40	6	30,7	19,3	5	24,4	1
KP064214405050	46,7	5	5,54	11,9	5,8	50	6	30,7	19,3	5	24,4	1
KP064214405060	46,7	5	5,54	11,9	5,8	60	6	30,7	19,3	5	24,4	1
KP064214405070	46,7	5	5,54	11,9	5,8	70	6	30,7	19,3	5	24,4	1
KP064214406010	46,7	6	6,99	11,9	5,8	10	7	30,7	19,3	6	35,64	1
KP064214406015	46,7	6	6,99	11,9	5,8	15	7	30,7	19,3	6	35,64	1
KP064214406020	46,7	6	6,99	11,9	5,8	20	7	30,7	19,3	6	35,64	1
KP064214406025	46,7	6	6,99	11,9	5,8	25	7	30,7	19,3	6	35,64	1
KP064214406030	46,7	6	6,99	11,9	5,8	30	7	30,7	19,3	6	35,64	1
KP064214406035	46,7	6	6,99	11,9	5,8	35	7	30,7	19,3	6	35,64	1
KP064214406040	46,7	6	6,99	11,9	5,8	40	7	30,7	19,3	6	35,64	1
KP064214406050	46,7	6	6,99	11,9	5,8	50	7	30,7	19,3	6	35,64	1
KP064214406060	46,7	6	6,99	11,9	5,8	60	7	30,7	19,3	6	35,64	1
KP064214406070	46,7	6	6,99	11,9	5,8	70	7	30,7	19,3	6	35,64	1
KP064214406080	46,7	6	6,99	11,9	5,8	80	7	30,7	19,3	6	35,64	1
KP064214408010	46,7	8	9,42	11,9	5,8	10	8	30,7	19,3	8	63,8	1
KP064214408015	46,7	8	9,42	11,9	5,8	15	8	30,7	19,3	8	63,8	1
KP064214408020	46,7	8	9,42	11,9	5,8	20	8	30,7	19,3	8	63,8	1
KP064214408025	46,7	8	9,42	11,9	5,8	25	8	30,7	19,3	8	63,8	1
KP064214408030	46,7	8	9,42	11,9	5,8	30	8	30,7	19,3	8	63,8	1
KP064214408035	46,7	8	9,42	11,9	5,8	35	8	30,7	19,3	8	63,8	1
KP064214408040	46,7	8	9,42	11,9	5,8	40	8	30,7	19,3	8	63,8	1
KP064214408050	46,7	8	9,42	11,9	5,8	50	8	30,7	19,3	8	63,8	1
KP064214408060	46,7	8	9,42	11,9	5,8	60	8	30,7	19,3	8	63,8	1
KP064214408070	46,7	8	9,42	11,9	5,8	70	8	30,7	19,3	8	63,8	1
KP064214408080	46,7	8	9,42	11,9	5,8	80	8	30,7	19,3	8	63,8	1
KP064215110015	54,1	10	11,86	14,2	7,4	15	9	34,8	22,1	10	100,1	1

MATERIAL
Pin: AISI630 (Stainless steel) tempered
Button: EN-AW 2024 T4 (Aluminium) anodized blue
Balls: AISI440C (Stainless steel) tempered and passivated
Springs: AISI301 (Stainless steel) tempered
Grip: EN-AC-46000 (Aluminium) die-cast, anodized black

NOTES
Ball lock pins are used to easily fasten or join components. The two balls are disengaged by pressing the push button, and the pin can be slipped into holes in the workpieces. When the push button is released, the balls lock the connection securely.
The hardened, high-tensile stainless steel pin permits extreme loads with low wear.

Double shear stress (F) = S · τ aB max

ACCESSORIES
Bushing for ball lock pins KP0724...
Spiral safety cable KP0367...
Retaining cable with eyelet KP0367...
Ring KP0367...

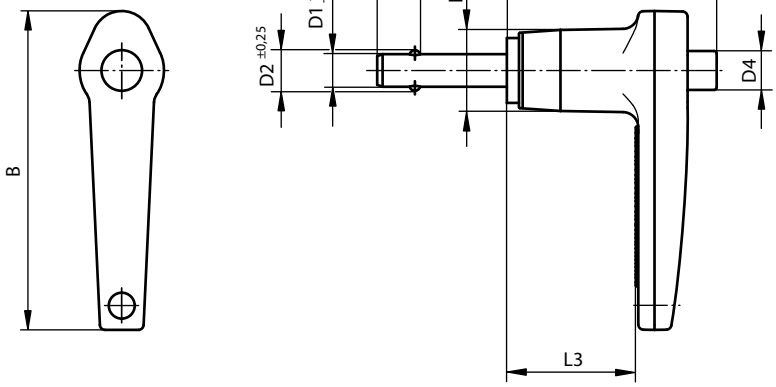

Code	B	D1	D2	D3	D4	L	L1	L2	L3	Housing slot H11	Shear stress double max (kN)	Package (pcs)
KP064215110020	54,1	10	11,86	14,2	7,4	20	9	34,8	22,1	10	100,1	1
KP064215110025	54,1	10	11,86	14,2	7,4	25	9	34,8	22,1	10	100,1	1
KP064215110030	54,1	10	11,86	14,2	7,4	30	9	34,8	22,1	10	100,1	1
KP064215110035	54,1	10	11,86	14,2	7,4	35	9	34,8	22,1	10	100,1	1
KP064215110040	54,1	10	11,86	14,2	7,4	40	9	34,8	22,1	10	100,1	1
KP064215110050	54,1	10	11,86	14,2	7,4	50	9	34,8	22,1	10	100,1	1
KP064215110060	54,1	10	11,86	14,2	7,4	60	9	34,8	22,1	10	100,1	1
KP064215110070	54,1	10	11,86	14,2	7,4	70	9	34,8	22,1	10	100,1	1
KP064215110080	54,1	10	11,86	14,2	7,4	80	9	34,8	22,1	10	100,1	1
KP064215110090	54,1	10	11,86	14,2	7,4	90	9	34,8	22,1	10	100,1	1
KP064215110100	54,1	10	11,86	14,2	7,4	100	9	34,8	22,1	10	100,1	1
KP064215712020	60,2	12	14,45	18,3	10,7	20	10	40,6	25,4	12	144,06	1
KP064215712025	60,2	12	14,45	18,3	10,7	25	10	40,6	25,4	12	144,06	1
KP064215712030	60,2	12	14,45	18,3	10,7	30	10	40,6	25,4	12	144,06	1
KP064215712035	60,2	12	14,45	18,3	10,7	35	10	40,6	25,4	12	144,06	1
KP064215712040	60,2	12	14,45	18,3	10,7	40	10	40,6	25,4	12	144,06	1
KP064215712050	60,2	12	14,45	18,3	10,7	50	10	40,6	25,4	12	144,06	1
KP064215712060	60,2	12	14,45	18,3	10,7	60	10	40,6	25,4	12	144,06	1
KP064215712070	60,2	12	14,45	18,3	10,7	70	10	40,6	25,4	12	144,06	1
KP064215712080	60,2	12	14,45	18,3	10,7	80	10	40,6	25,4	12	144,06	1
KP064215712090	60,2	12	14,45	18,3	10,7	90	10	40,6	25,4	12	144,06	1
KP064215712100	60,2	12	14,45	18,3	10,7	100	10	40,6	25,4	12	144,06	1
KP064216816025	68,3	16	19	23,9	13,7	25	14	45	28,2	16	257,18	1
KP064216816030	68,3	16	19	23,9	13,7	30	14	45	28,2	16	257,18	1
KP064216816035	68,3	16	19	23,9	13,7	35	14	45	28,2	16	257,18	1
KP064216816040	68,3	16	19	23,9	13,7	40	14	45	28,2	16	257,18	1
KP064216816050	68,3	16	19	23,9	13,7	50	14	45	28,2	16	257,18	1
KP064216816060	68,3	16	19	23,9	13,7	60	14	45	28,2	16	257,18	1
KP064216816070	68,3	16	19	23,9	13,7	70	14	45	28,2	16	257,18	1
KP064216816080	68,3	16	19	23,9	13,7	80	14	45	28,2	16	257,18	1
KP064216816090	68,3	16	19	23,9	13,7	90	14	45	28,2	16	257,18	1
KP064216816100	68,3	16	19	23,9	13,7	100	14	45	28,2	16	257,18	1

BUSHING FOR BALL LOCKING PINS

for ball lock pin

MATERIAL
AISI303 (Stainless steel)

NOTES
These bushes are ideal for easy and quick positioning of ball lock pins and locking pins.
Advantages:
- centred by the centring collar.
- easy and reliable installation.
- can be screwed into various materials.
- usable both sides

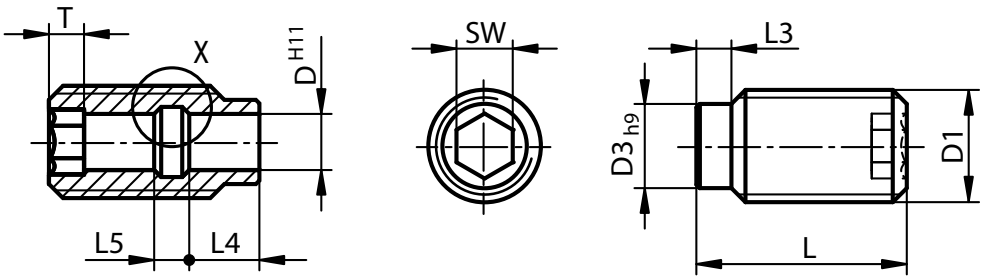

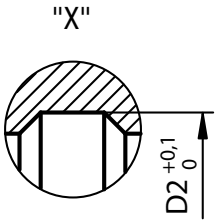

Code	D	D1	D2	D3	L	L3	L4	L5	SW	T	Package (pcs)
KP072410512	5	M12	6	9	25	4	7	3	5	4	1
KP072410616	6	M16	7,5	12	30	5	10	5	6	5	1
KP072410816	8	M16	10	12	30	5	10	5	8	5	1
KP072411024	10	M24	13	18	35	6	8	7	10	6	1
KP072411224	12	M24	15	18	35	6	8	7	12	6	1
KP072411630	16	M30	20	24	40	8	11	9	16	7	1

MATERIAL
Body: AISI303 (Stainless steel)
Long-Lok insert: PA (Polyamide)

NOTES
These bushes are ideal for easy and quick positioning of ball lock pins and locking pins.
Advantages:
- centred by the centring collar.
- easy and reliable installation.
- can be screwed into various materials.
- usable both sides
- the LongLok thread lock enables the depth to be exactly matched to existing components, no locknut is required.

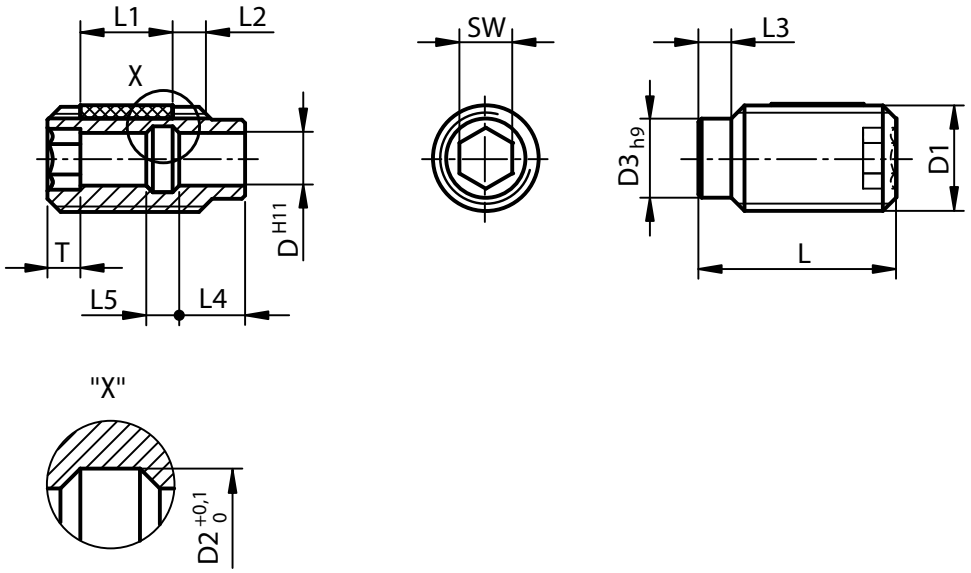

Code	D	D1	D2	D3	L	L1	L3	L4	L5	SW	T	Package (pcs)
KP0724105121	5	M12	6	9	25	10	4	7	3	5	4	1
KP0724106161	6	M16	7,5	12	30	14	5	10	5	6	5	1
KP0724108161	8	M16	10	12	30	14	5	10	5	8	5	1
KP0724110241	10	M24	13	18	35	14	6	8	7	10	6	1
KP0724112241	12	M24	15	18	35	14	6	8	7	12	6	1
KP0724116301	16	M30	20	24	40	14	8	11	9	16	7	1

MATERIAL
AISI301 (Stainless steel)

NOTES
Suitable for retaining cable with loop K0367.
Ball lock pins K0363, K0364, K0641, K0366, K0642, K0790, K0791.
Locking pins K0365.
Indexing plungers K0342, K0635, K0636.

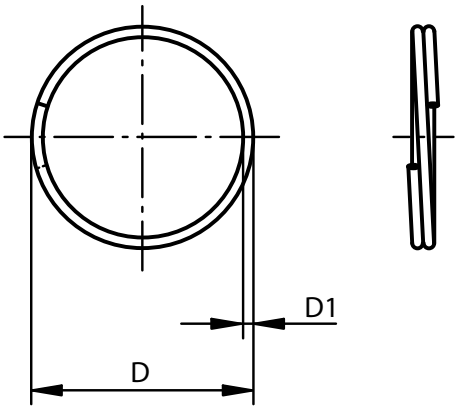

Code	D	D1	Package (pcs)
KP036715	15	1	1
KP036719	19	1	1
KP036723	23	1,2	1
KP036728	28	1,7	1

MATERIAL

Spiral cable:	PUR (Rectified polyurethane) black
Eyelet:	Rame white galvanized
	AISI303 (Stainless steel) polished
Ring:	Cl 5.8 (Steel) chrome-plated
	AISI303 (Stainless steel) polished

NOTES

Elastic spiral cable for mounting device components.
Excellent recovery force, robust and wear-resistant.

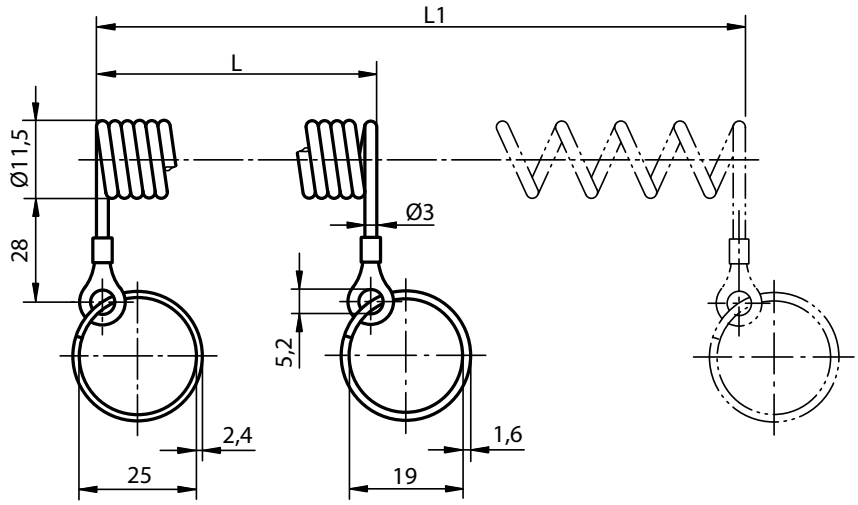

Code	Material rings	L	L1	Package (pcs)
KP036710100	Cl 5.8 chrome-plated	100	500	1
KP036710200	Cl 5.8 chrome-plated	200	1000	1
KP036720100	AISI303 polished	100	500	1
KP036720200	AISI303 polished	200	1000	1

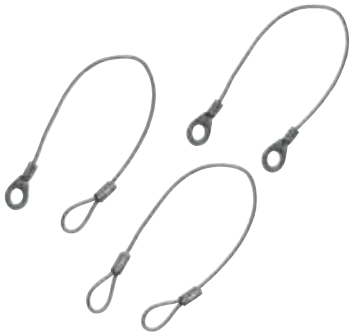

MATERIAL

Cable:	AISI303 (Stainless steel) plastic coated
Clamp:	AL (Aluminium)
Cable tip:	AL (Aluminium)

NOTES

With the retaining cable and KP0367 ring, it is possible to attach ball lock pins KP0363, KP0364, KP0641, KP0366, KP0642, KP0790, KP0791 and mounting pins KP0365, so they cannot be lost.
To attach the locking cable use an M5 screw. Operating temperature: +80 °C.

TYPE A

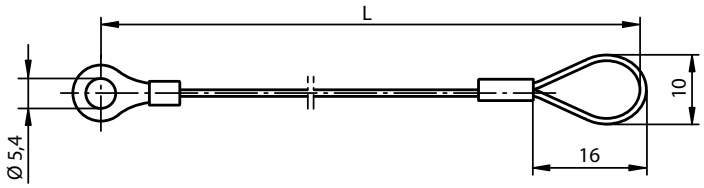

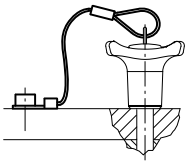

TYPE B

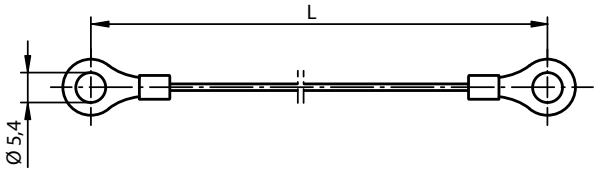

TYPE C

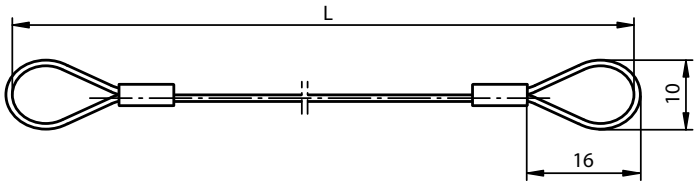

Code type A	Code type B	Code type C	L	Package (pcs)
KP03670150	**KP03671150**	**KP03672150**	150	1
KP03670200	**KP03671200**	**KP03672200**	200	1
KP03670300	**KP03671300**	**KP03672300**	300	1
KP03670500	**KP03671500**	**KP03672500**	500	1

17

MECHANICAL ELEMENTS

Washers
page 16.1

Hollow anchors
page 16.8

T-nuts and T-bolts for alluminium profile
pag. 16.12

Threaded inserts
page 16.21

Drilling guide bushes
page 16.24

Locking rings
page 16.26

Joints
page 16.32

Forks
page 16.44

Pins
page. 16.48

Clips
page 16.52

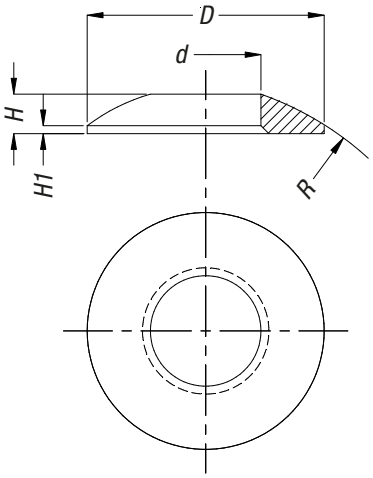

STANDARD
DIN 6319/C

MATERIAL - SURFACE TREATMENT
AC (Steel) HV10 phosphated
AC (Steel) HV10 galvanized white

USE
Using the convex washer along with the concave one allows clamping between two surfaces that are not parallel.

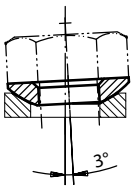

ACCESSORIES
Can be assembled with concave washer DIN 6319/D or DIN 6319/G.

Code AC phosphated	Code AC galvanized white	DN	d (H13)	D	H	H1	R	Max static load (kN)	Package (pcs)
BA0S375C05000	-	M5	5,25	10,5	2	0,4	7,5	6,5	50
BA0S375C06000	**BA0S375C06001**	M6	6,4	12	2,3	0,7	9	9	50
BA0S375C08000	**BA0S375C08001**	M8	8,4	17	3,2	0,6	12	17	50
BA00662040100	**BA00662040101**	M10	10,5	21	4	0,8	15	26	50
BA00662040200	**BA00662040201**	M12	13	24	4,6	1,1	17	38	50
BA0S375C14000	-	M14	15	28	5	1,2	22	53	25
BA00662040300	**BA00662040301**	M16	17	30	5,3	1,3	22	73	25
BA0S375C20000	**BA0S375C20001**	M20	21	36	6,3	2	27	117	10
BA0S375C24000	**BA0S375C24001**	M24	25	44	8,2	2,4	32	168	10
BA0S375C27000	**BA0S375C27001**	M27	28	50	9,5	-	37	-	1
BA00662040600	**BA00662040601**	M30	31	56	11,2	3,6	41	269	1
BA00662040700	**BA00662040701**	M36	37	68	14	4,6	50	394	1
BA0S375C42000	**BA0S375C42001**	M42	43	78	17	6,5	58	542	1

STANDARD
DIN 6319/D

MATERIAL - SURFACE TREATMENT
AC (Steel) HV10 phosphated
AC (Steel) HV10 galvanized white

USE
Using the convex washer along with the concave one allows clamping between two surfaces that are not parallel.

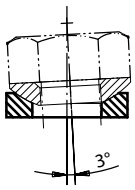

ACCESSORIES
Can be assembled with convex washer DIN 6319/C.

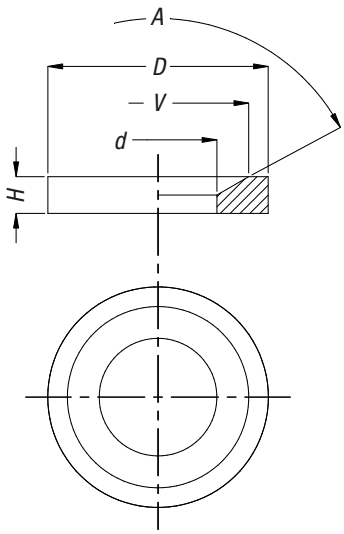

Code AC phosphated	Code AC galvanized white	DN	d (H13)	D	H	V	A	Max static load (kN)	Package (pcs)
BA0S375D05000	-	M5	6	10,5	2,1	9,25	120°	6,5	50
BA0S375D06000	**BA0S375D06001**	M6	7,1	12	2,8	11	120°	9	50
BA00662041000	**BA00662041001**	M8	9,6	17	3,5	14,5	120°	17	50
BA00662041100	**BA00662041101**	M10	12	21	4,2	18,5	120°	26	50
BA00662041200	**BA00662041201**	M12	14,2	24	5	20	120°	38	50
BA0S375D14000	-	M14	16,5	28	5,6	24,8	120°	53	25
BA00662041300	**BA00662041301**	M16	19	30	6,2	26	120°	73	25
BA00662041400	**BA00662041401**	M20	23,2	36	7,5	31	120°	117	10
BA0S375D24000	**BA0S375D24001**	M24	28	44	9,5	37	120°	168	10
BA0S375D27000	**BA0S375D27001**	M27	31,5	50	10,8	-	120°	-	1
BA00662041600	**BA00662041601**	M30	35	56	12	49	120°	269	1
BA00662041700	**BA00662041701**	M36	42	68	15	60	120°	394	1
BA0S375D42000	**BA0S375D42001**	M42	49	78	18	70	120°	542	1
BA0S375D48000	**BA0S375D48001**	M48	56	92	22	82	120°	714	1

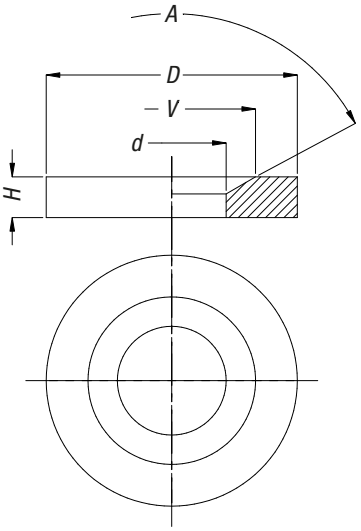

STANDARD
DIN 6319/G

MATERIAL - SURFACE TREATMENT
AC (Steel) HV30 phosphated
AC (Steel) HV30 white galvanized

USE
Using the convex washer along with the concave one allows clamping between two surfaces that are not parallel.

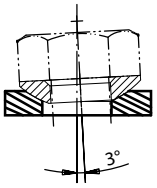

ACCESSORIES
Can be assembled with convex washer DIN 6319/C.

Code AC phosphated	Code AC galvanized white	DN	d (H13)	D	H	V	A	Package (pcs)
BA0S375G06000	-	M6	7,1	17	4	11	120°	10
BA0S375G08000	**BA0S375G08001**	M8	9,6	23	4	14,5	120°	10
BA0S375G10000	-	M10	12	28	5	18,5	120°	10
BA00662042200	-	M12	14,2	35	5	20	120°	10
BA0S375G14000		M14	16,5	40	5	24,8	120°	10
BA0S375G16000	**BA0S375G16001**	M16	19	45	6	26	120°	10
BA0S375G20000	-	M20	23,2	50	8	31	120°	10
BA0S375G24000	-	M24	28	60	10	37	120°	1
BA0S375G30000	-	M30	35	68	10	49	120°	1
BA0S375G35000	-	M36	42	80	12	60	120°	1
BA0S375G48000	-	M48	56	110	17	82	120°	1

MATERIAL
36SMnPb14 (Steel) HV230

SURFACE TREATMENT
Phosphated

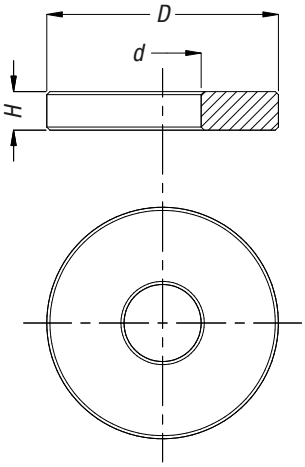

Code 36SMnPb14 phosphated	d	D	H	Package (pcs)
BA0S370060000	6,6	13	3,5	10
BA0S370080000	8,4	18	4	10
BA0S370010000	10,5	22	4	10
BA0S370012000	13	28	5	10
BA0S370014000	15	35	6	10
BA0S370016000	17	35	6	10
BA0S370018000	19	40	6	10
BA0S370020000	21	40	6	10
BA0S370022000	23	45	8	10
BA0S370024000	25	45	8	10
BA0S370027000	28	60	10	10
BA0S370030000	31	60	10	10
BA0S370042000	43	80	12	10
BA0S370036000	37	70	12	10
BA0S370048000	49	90	12	10
BA0S380006000	6,6	20	8	10
BA0S380008000	8,4	35	8	10
BA0S380010000	10,5	35	8	10
BA0S380012000	13	40	8	10
BA0S380014000	15	40	10	10
BA0S380016000	17	45	10	10
BA0S380020000	21	50	12	10
BA0S380022000	23	50	12	10
BA0S380024000	25	50	12	10
BA0S390006000	6,6	17	3,5	100
BA0S390008000	8,4	23	4	100
BA0S390010000	10,5	28	4	100
BA0S390012000	13	35	5	50
BA0S390014000	15	40	5	100
BA0S390016000	17	45	6	50
BA0S390018000	19	45	6	25
BA0S390020000	21	50	6	25
BA0S390022000	23	50	8	25
BA0S390024000	25	60	8	10
BA0S390027000	28	68	10	10
BA0S390030000	31	68	10	10
BA0S390036000	38	80	12	10
BA0S390042000	44	100	15	10
BA0S390048000	50	100	17	10

MATERIAL - SURFACE TREATMENT
AC (Steel) phosphated
AC (Steel) galvanized white
AC (Steel) niploy

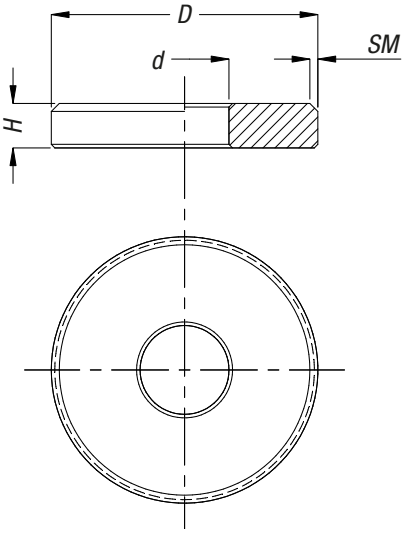

Code AC phosphated	Code AC galvanized white	Code AC niploy	d	D	H	SM	Package (pcs)
RGS0321020531	RGS0321020501	-	3,2	10	2	0,5 x 45°	200
RGS0421020531	RGS0421020501	RGS0421020518	4,2	10	2	0,5 x 45°	200
RGS0421530531	RGS0421530501	RGS0521530518	4,2	15	3	0,5 x 45°	200
RGS0521530531	RGS0521530501	-	5,2	15	3	0,5 x 45°	200
RGS0522030531	RGS0522030501	-	5,2	20	3	0,5 x 45°	200
RGS0523041031	RGS0523041001	-	5,2	30	4	1 x 45°	100
RGS0621530531	RGS0621530501	RGS0621530518	6,2	15	3	0,5 x 45°	200
RGS0622030531	RGS0622030501	RGS0622030518	6,2	20	3	0,5 x 45°	200
RGS0622541031	RGS0622541001	RGS0622541018	6,2	25	4	1 x 45°	200
RGS0623041031	RGS0623041001	RGS0623041018	6,2	30	4	1 x 45°	100
RGS0623551031	RGS0623551001	-	6,2	35	5	1 x 45°	100
RGS0654051031	RGS0654051001	-	6,5	40	5	1 x 45°	100
RGS0852040531	RGS0852040501	RGS0852040518	8,5	20	4	0,5 x 45°	200
RGS0852541031	RGS0852541001	RGS0852541018	8,5	25	4	1 x 45°	200
RGS0853041031	RGS0853041001	RGS0853041018	8,5	30	4	1 x 45°	100
RGS0853551031	RGS0853551001	-	8,5	35	5	1 x 45°	100
RGS0854051031	RGS0854051001	-	8,5	40	5	1 x 45°	100
RGS0854552031	RGS0854552001	-	8,5	45	5	2 x 45°	50
RGS0855062031	RGS0855062001	-	8,5	50	6	2 x 45°	50
RGS1052541031	RGS1052541001	RGS1052541018	10,5	25	4	1 x 45°	200
RGS1053041031	RGS1053041001	RGS1053041018	10,5	30	4	1 x 45°	100
RGS1053551031	RGS1053551001	RGS1053551018	10,5	35	5	1 x 45°	100
RGS1054051031	RGS1054051001	RGS1054051018	10,5	40	5	1 x 45°	100
RGS1054552031	RGS1054552001	-	10,5	45	5	2 x 45°	50
RGS1055062031	RGS1055062001	-	10,5	50	6	2 x 45°	50
RGS1253041031	RGS1253041001	-	12,5	30	4	1 x 45°	100
RGS1255062031	RGS1255062001	-	12,5	50	6	2 x 45°	50

MATERIAL - SURFACE TREATMENT
AC (Steel) phosphated
AC (Steel) galvanized white
AC (Steel) niploy

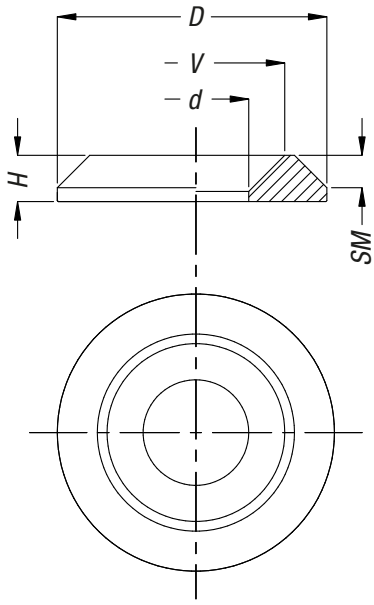

Code AC phosphated	Code AC galvanized white	Code AC niploy	d	D	H	V	SM	Package (pcs)
RTC0411330031	**RTC0411330001**	**-**	4,1	13	3	8	2,1 x 45°	200
RTC0521635031	**RTC0521635001**	**RTC0521635018**	5,2	16	3,5	10	2,6 x 45°	200
RTC0651835031	**RTC0651835001**	**-**	6,5	18	4	12,5	2,1 x 45°	200
RTC0852550031	**RTC0852550001**	**RTC0852550018**	8,5	25	5	16,5	3,5 x 45°	200
RTC1053370031	**RTC1053370001**	**-**	10,5	33	7	20,5	6 x 45°	100
RTC1254080031	**RTC1254080001**	**-**	12,5	40	8	24,5	7 x 45°	100

MATERIAL - SURFACE TREATMENT
AC (Steel) phosphated
AC (Steel) galvanized white

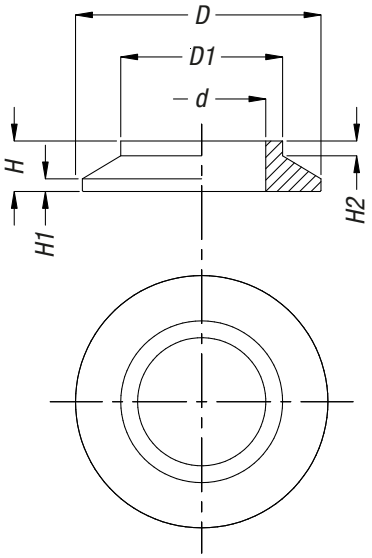

Code AC phosphated	Code AC galvanized white	d	D	H	H1	H2	D1	Package (pcs)
RTS0651540031	**RTS0651540001**	6,5	15	4	1,5	1	9	200
RTS0852265031	**RTS0852265001**	8,5	22	6,5	1,5	2	12	200
RTS1052265031	**RTS1052265001**	10,5	22	6,5	1,5	2	14	200

STANDARD
DIN 508

MATERIAL - SURFACE TREATMENT
Cl 10 (Steel) phosphated
Cl 10 (Steel) galvanized white

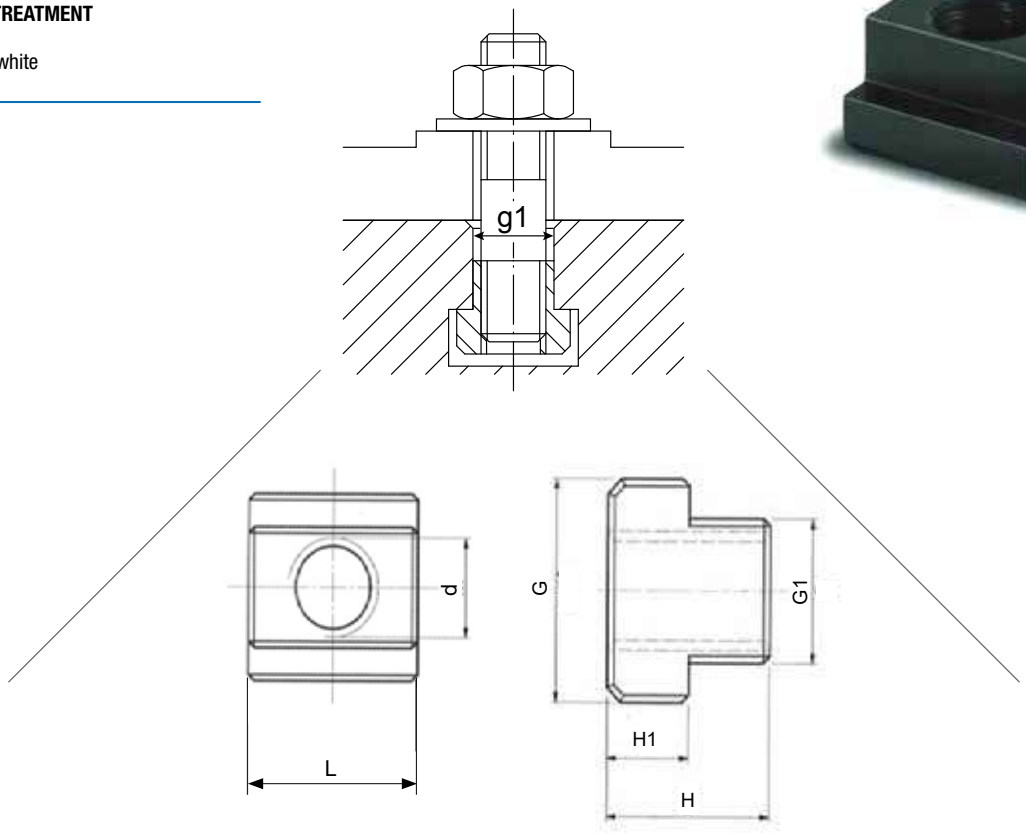

Code Cl 10 phosphated	Code Cl 10 galvanized white	g1	G1	d	G	L	H	H1	Package (pcs)
BA9S360040500	-	5	5	M4	9	9	6,5	3	25
BA0S360000600	**BA0S360000601**	8	7,7	M6	13	13	10	6	25
BA0S360000800	**BA0S360000801**	10	9,7	M8	15	15	12	6	25
BA0S360801200	-	12	11,7	M8	18	18	14	7	25
BA0S360101200	**BA0S360101201**	12	11,7	M10	18	18	14	7	10
BA0S360801400	-	14	13,7	M8	22	22	16	8	10
BA0S360101400	**BA0S360101401**	14	13,7	M10	22	22	16	8	10
BA0S360121400	**BA0S360121401**	14	13,7	M12	22	22	16	8	10
BA0S360101600	**BA0S360101601**	16	15,7	M10	25	25	18	9	10
BA0S360121600	**BA0S360121601**	16	15,7	M12	25	25	18	9	10
BA0S360141600	**BA0S360141601**	16	15,7	M14	25	25	18	9	10
BA0S360801800	-	18	17,7	M8	28	28	20	10	10
BA0S360101800	**BA0S360101801**	18	17,7	M10	28	28	20	10	10
BA0S360121800	**BA0S360121801**	18	17,7	M12	28	28	20	10	10
BA0S360141800	**BA0S360141801**	18	17,7	M14	28	28	20	10	10
BA0S360161800	**BA0S360161801**	18	17,7	M16	28	28	20	10	10
BA0S360162000	**BA0S360162001**	20	19,7	M16	32	32	24	12	10
BA0S360181900	-	20	19,7	M18	32	32	24	12	10
BA0S360162200	**BA0S360162201**	22	21,7	M16	35	35	28	14	10
BA0S360182200	**BA0S360182201**	22	21,7	M18	35	35	28	14	10
BA0S360202200	**BA0S360202201**	22	21,7	M20	35	35	28	14	10
BA0S360162400	**BA0S360162401**	24	23,7	M16	40	40	32	16	10
BA0S360202400	**BA0S360202401**	24	23,7	M20	40	40	32	16	10
BA0S360162800	**BA0S360162801**	28	27,7	M16	44	44	36	18	10
BA0S360202700	-	28	27,7	M20	44	44	36	18	10
BA0S360242800	**BA0S360242801**	28	27,7	M24	44	44	36	18	10
BA00662051000	-	36	35,6	M30	54	54	44	22	10

MATERIAL - SURFACE TREATMENT
Cl 10 (Steel) phosphated

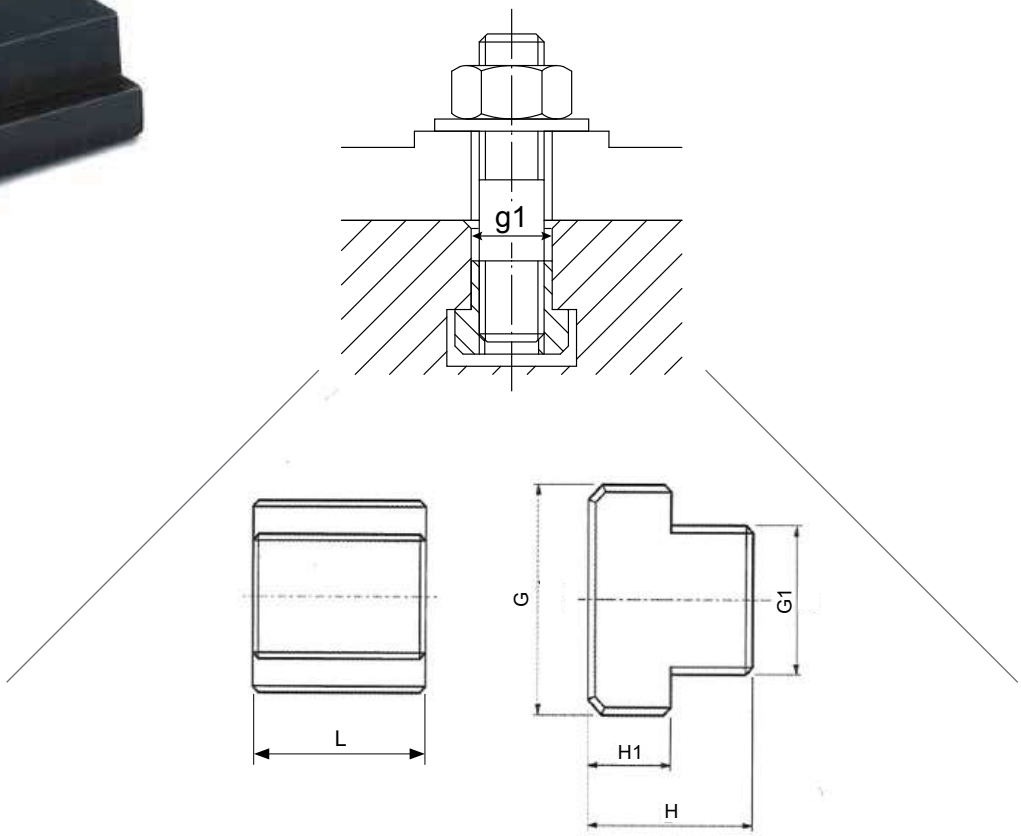

Code Cl 10 phosphated	g1	G1	G	L	H	H1	Package (pcs)
BA0S361010000	10	9,7	15	15	12	6	10
BA0S361014000	14	13,7	22	22	16	8	10
BA0S361016000	16	15,7	25	25	18	9	10
BA0S361020000	20	19,7	32	32	24	12	1
BA9S361028000	28	27,7	44	44	36	18	1
BA0S361032000	32	31,6	50	50	40	20	1
BA0S361042000	42	41,6	65	65	52	26	1

MATERIAL - SURFACE TREATMENT
Cl 10 (Steel) phosphated

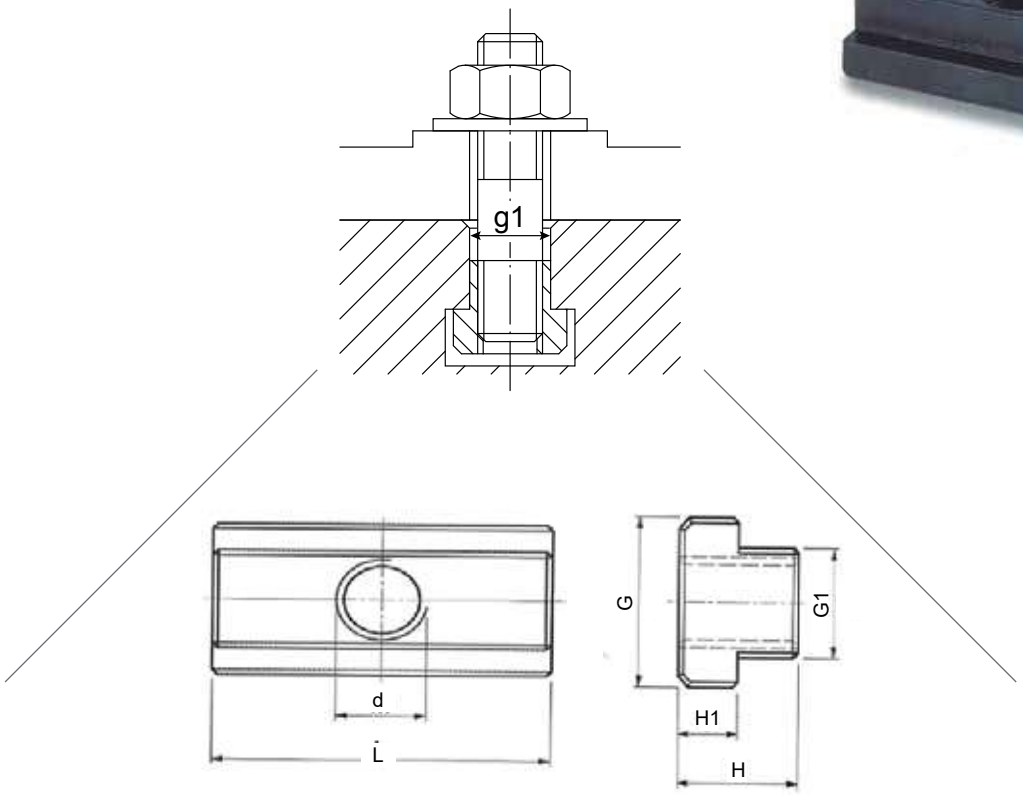

Code Cl 10 phosphated	g1	G1	d	G	L	H	H1	Package (pcs)
BA0S362608000	8	7,7	M6	13	26	10	5	10
BA0S362810000	10	9,7	M8	15	30	12	6	10
BA0S362100000	12	11,7	M10	18	36	14	7	10
BA0S362120000	14	13,7	M12	22	44	16	8	10
BA0S362160000	18	17,7	M16	28	56	20	10	10

MATERIAL - SURFACE TREATMENT
Cl 10 (Steel) phosphated

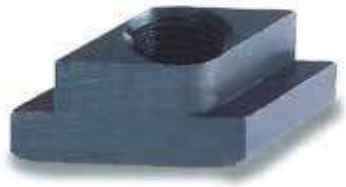

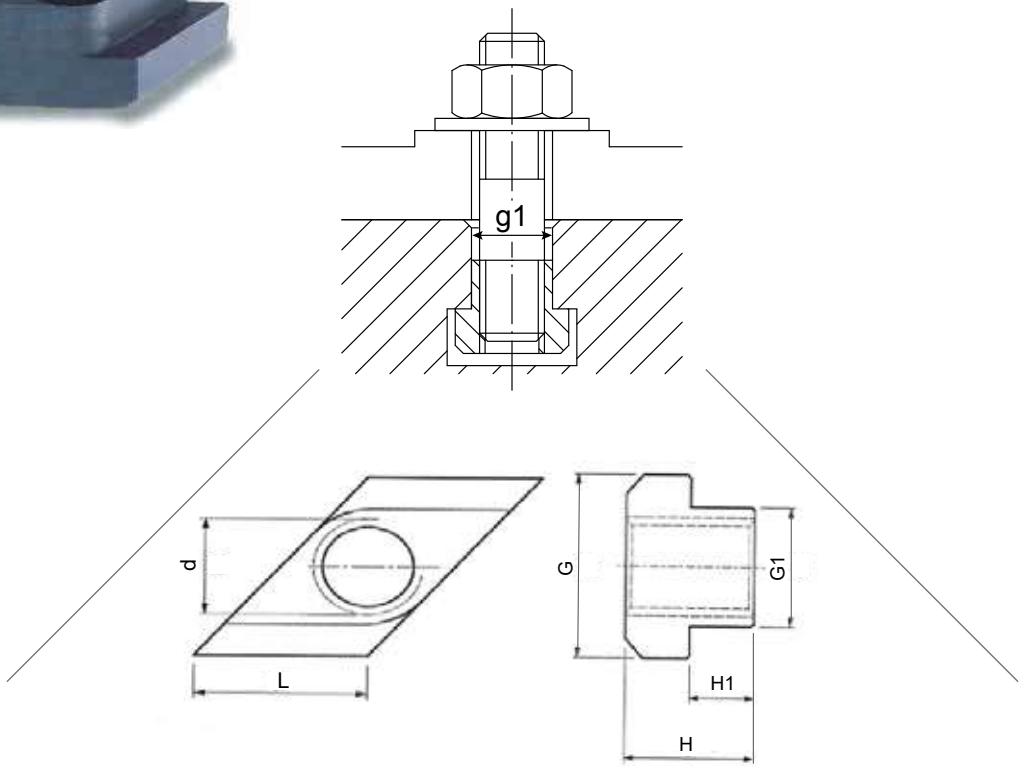

Code Cl 10 phosphated	g1	G1	d	G	L	H	H1	Package (pcs)
BA0S363101200	12	11,7	M10	18	11,7	14	7	10
BA0S363101400	14	13,7	M10	22	13,7	16	8	10
BA0S363121400	14	13,7	M12	22	13,7	16	8	10
BA0S363141600	16	15,7	M14	25	15,7	18	9	10
BA0S363161800	18	17,7	M16	28	17,7	20	10	10
BA0S363162000	20	19,7	M16	32	19,7	24	12	1
BA0S363162200	22	21,7	M16	35	21,7	28	14	1
BA0S363202200	22	21,7	M20	35	21,7	28	14	1
BA0S363240280	28	27,7	M24	44	27,7	36	18	1

MATERIAL - SURFACE TREATMENT
T-slot nut: Zinc platetd steel
Ball: Stainless steel

NOTES
T-slot nut is inserted into the slot of the profile from the top, the bottom or by rotation. The spring ball allows the dowel to stay in place.

TYPE A

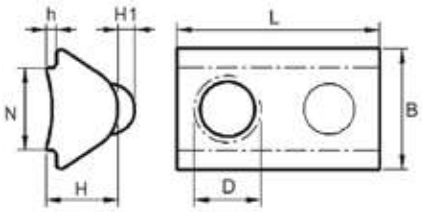

TYPE B

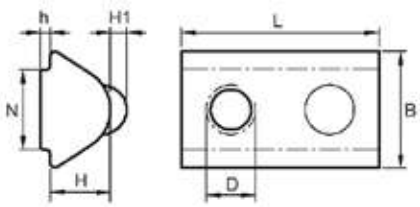

TYPE C

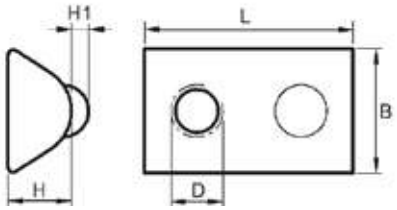

TYPE D

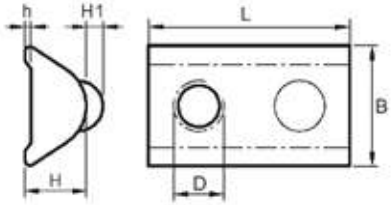

Item code	Type	D	Profil	Slot	B x L	H	H1	h	N	Package (pcs)
AP5DS0305I001	A	M3	I	5	7,1 x 12	4,3	1	0,6	4,9	100
AP5DS0405I001	A	M4	I	5	7,1 x 12	4,3	1	0,6	4,9	100
AP5DS0505I001	A	M5	I	5	7,1 x 12	4,3	1	0,6	4,9	100
AP5DS0306I101	A	M3	I	6	10,5 x 17	6,9	1	0,6	6,5	100
AP5DS0406I101	A	M4	I	6	10,5 x 17	6,9	1	0,6	6,5	100
AP5DS0506I101	A	M5	I	6	10,5 x 17	6,9	1	0,6	6,5	100
AP5DS0606I101	A	M6	I	6	10,5 x 17	6,9	1	0,6	6,5	100
AP5DS0305I101	B	M3	I	5	7,7 x 12	4	1	0,6	4,9	100
AP5DS0405I101	B	M4	I	5	7,7 x 12	4	1	0,6	4,9	100
AP5DS0505I101	B	M5	I	5	7,7 x 12	4	1	0,6	4,9	100
AP5DS0308I001	B	M3	I	8	13,5 x 22	7,2	1,75	0,8	7,8	100
AP5DS0408I001	B	M4	I	8	13,5 x 22	7,2	1,75	0,8	7,8	100
AP5DS0508I001	B	M5	I	8	13,5 x 22	7,2	1,75	0,8	7,8	100
AP5DS0608I001	B	M6	I	8	13,5 x 22	7,2	1,75	0,8	7,8	100
AP5DS0808I001	B	M8	I	8	13,5 x 22	7,2	1,75	0,8	7,8	100
AP5DS0305I201	C	M3	I	5	8 x 12	4,2	1	-	-	100
AP5DS0405I201	C	M4	I	5	8 x 12	4,2	1	-	-	100
AP5DS0505I201	C	M5	I	5	8 x 12	4,2	1	-	-	100
AP5DS0308I101	C	M3	I	8	13,7 x 22	7	1,7	-	-	100
AP5DS0408I101	C	M4	I	8	13,7 x 22	7	1,7	-	-	100
AP5DS0508I101	C	M5	I	8	13,7 x 22	7	1,7	-	-	100
AP5DS0608I101	C	M6	I	8	13,7 x 22	7	1,7	-	-	100
AP5DS0808I101	C	M8	I	8	13,7 x 22	7	1,7	-	-	100
AP5DS0306I001	D	M3	I	6	10,5 x 17	6,3	1	0,7	-	100
AP5DS0406I001	D	M4	I	6	10,5 x 17	6,3	1	0,7	-	100
AP5DS0506I001	D	M5	I	6	10,5 x 17	6,3	1	0,7	-	100
AP5DS0606I001	D	M6	I	6	10,5 x 17	6,3	1	0,7	-	100

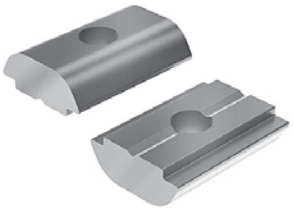

MATERIAL - SURFACE TREATMENT
Zinc platetd steel

NOTES
T-slot nut is inserted into the slot of the profile from the top, the bottom or by rotation.

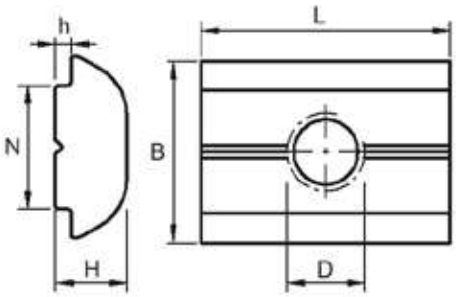

Item code	D	Profil	Slot	B x L	H	h	N	Package (pcs)
AP5DI0408B001	M4	B	8	11,6 x 16	4,6	1	7,9	100
AP5DI0508B001	M5	B	8	11,6 x 16	4,6	1	7,9	100
AP5DI0608B001	M6	B	8	11,6 x 16	4,6	1	7,9	100
AP5DI0808B001	M8	B	8	11,6 x 16	4,6	1	7,9	100
AP5DI0410B001	M4	B	10	14 x 19	5,2	1,5	9,9	100
AP5DI0510B001	M5	B	10	14 x 19	5,2	1,5	9,9	100
AP5DI0610B001	M6	B	10	14 x 19	5,2	1,5	9,9	100
AP5DI0810B001	M8	B	10	14 x 19	5,2	1,5	9,9	100

MATERIAL - SURFACE TREATMENT
Zinc platetd steel

NOTES
T-slot nut is inserted into the slot of the profile from the top, the bottom or by rotation. The spring leaf allows the dowel to stay in place.

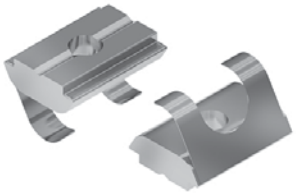

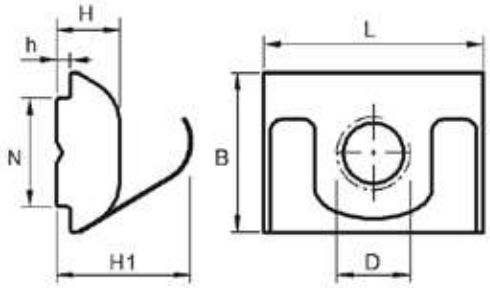

Item code	D	Profil	Slot	B x L	H	h	H1	N	Package (pcs)
AP5DR0408B001	M4	B	8	11,6 X 16	4,6	1	9,8	7,9	100
AP5DR0508B001	M5	B	8	11,6 X 16	4,6	1	9,8	7,9	100
AP5DR0608B001	M6	B	8	11,6 X 16	4,6	1	9,8	7,9	100
AP5DR0808B001	M8	B	8	11,6 X 16	4,6	1	9,8	7,9	100
AP5DR0410B001	M4	B	10	14 X 19	5,2	1,5	10,2	9,9	100
AP5DR0510B001	M5	B	10	14 X 19	5,2	1,5	10,2	9,9	100
AP5DR0610B001	M6	B	10	14 X 19	5,2	1,5	10,2	9,9	100
AP5DR0810B001	M8	B	10	14 X 19	5,2	1,5	10,2	9,9	100

MATERIAL - SURFACE TREATMENT
T-slot nut: Zinc platetd steel
Ball: Stainless steel

NOTES
T-slot nut is inserted into the slot of the profile from the top or the bottom. The spring ball allows the dowel to stay in place.

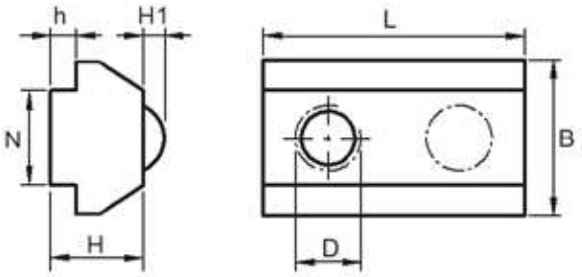

Item code	D	Profil	Slot	B x L	H	H1	h	N	Package (pcs)
AP5DT0408I001	M4	I	8	17 x 22	9,6	1,65	2,9	8	100
AP5DT0508I001	M5	I	8	17 x 22	9,6	1,65	2,9	8	100
AP5DT0608I001	M6	I	8	17 x 22	9,6	1,65	2,9	8	100
AP5DT0808I001	M8	I	8	17 x 22	9,6	1,65	2,9	8	100

MATERIAL - SURFACE TREATMENT
Zinc platetd steel

NOTES
The fixing into the slot of the profile takes place by inserting the nut and turning it 90 ° with respect to the position of entrance.

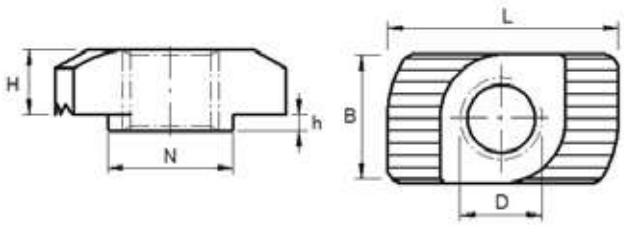

Item code	D	h	Profil	Slot	B x L	H	N	Package (pcs)
AP5D00406B001	M4	1	B	6	5,7 x 11,5	3,2	5,7	100
AP5D00408B001	M4	1,5	B	8	7,7 x 16	4,5	7,7	100
AP5D00508B001	M5	1,5	B	8	7,7 x 16	4,5	7,7	100
AP5D00608B001	M6	1,5	B	8	7,7 x 16	4,5	7,7	100
AP5D00408I001	M4	3	I	8	7,7 x 16	4,5	7,7	100
AP5D00508I001	M5	3	I	8	7,7 x 16	4,5	7,7	100
AP5D00608I001	M6	3	I	8	7,7 x 16	4,5	7,7	100
AP5D004100001	M4	1,3	-	10	9,7 x 19	5	9,7	100
AP5D005100001	M5	1,3	-	10	9,7 x 19	5	9,7	100
AP5D006100001	M6	1,3	-	10	9,7 x 19	5	9,7	100
AP5D008100001	M8	1,3	-	10	9,7 x 19	5	9,7	100
AP5D005100101	M5	1,5	-	10	9,7 x 19	5,8	9,7	100
AP5D006100101	M6	1,5	-	10	9,7 x 19	5,8	9,7	100
AP5D008100101	M8	1,5	-	10	9,7 x 19	5,8	9,7	100
AP5D00410B001	M4	3	B	10	9,7 x 19	5,8	9,7	100
AP5D00510B001	M5	3	B	10	9,7 x 19	5,8	9,7	100
AP5D00610B001	M6	3	B	10	9,7 x 19	5,8	9,7	100
AP5D00810B001	M8	3	B	10	9,7 x 19	5,8	9,7	100

MATERIAL - SURFACE TREATMENT
Zinc platetd steel
AISI 316 (Inox)

NOTES
The fixing into the slot of the profile takes place by inserting the screw and turning it 90 ° with respect to the position of entrance. The screw has a position indicator at the tip.

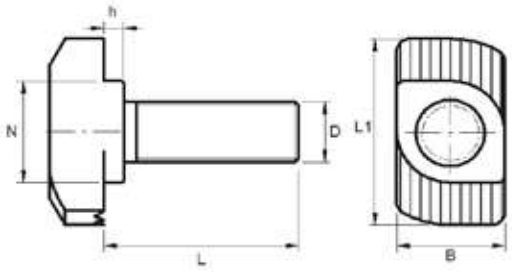

Item code Zinc platetd steel	Item code AISI 316	D x L	h	Profil	N (Cava)	B x L1	Package (pcs)
AP5V00608B001		M6x16	1,5	B	8	8 x 16	100
AP5V00608B101		M6x20	1,5	B	8	8 x 16	100
AP5V00608B201		M6x25	1,5	B	8	8 x 16	100
AP5V00608B301		M6x60	1,5	B	8	8 x 16	100
AP5V00808B001		M8x20	1,5	B	8	8 x 16	100
AP5V00808B101		M8x25	1,5	B	8	8 x 16	100
AP5V00808B201		M8x30	1,5	B	8	8 x 16	100
AP5V00608I001		M6x20	3	I	8	8 x 16	100
AP5V00608I101		M6x25	3	I	8	8 x 16	100
AP5V00808I001		M8x20	3	I	8	8 x 16	100
AP5V00808I101		M8x25	3	I	8	8 x 16	100
AP5V00808I201		M8x30	3	I	8	8 x 16	100
AP5V00808I301		M8x40	3	I	8	8 x 16	100
AP5V00810B001		M8x20	1,5	-	10	8 x 17,5	100
AP5V00810B101		M8x25	1,5	-	10	8 x 17,5	100
AP5V00810B201		M8x20	3	B	10	8,5 x 17,5	100
AP5V00810B301		M8x25	3	B	10	8,5 x 17,5	100
AP5V00810B401		M8x30	3	B	10	8,5 x 17,5	100
AP5V00810B501		M8x40	3	B	10	8,5 x 17,5	100
AP5V00810B601		M8x60	3	B	10	8,5 x 17,5	100
	AP5V00610B001	M6x20	3	B	10	8,5 x 19,4	100
	AP5V00610B101	M6x25	3	B	10	8,5 x 19,4	100
	AP5V00610B201	M6x30	3	B	10	8,5 x 19,4	100
	AP5V00610B301	M6x40	3	B	10	8,5 x 19,4	100
	AP5V00610B401	M6x60	3	B	10	8,5 x 19,4	100
	AP5V00810B701	M8x30	3	B	10	8,5 x 19,4	100
	AP5V00810B801	M8x40	3	B	10	8,5 x 19,4	100
	AP5V00810B801	M8x60	3	B	10	8,5 x 19,4	100

MATERIAL - SURFACE TREATMENT
Zinc platetd steel

NOTES
Threaded plate is inserted into the slot of the profile from the top or the bottom.

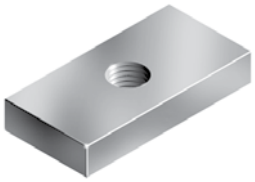

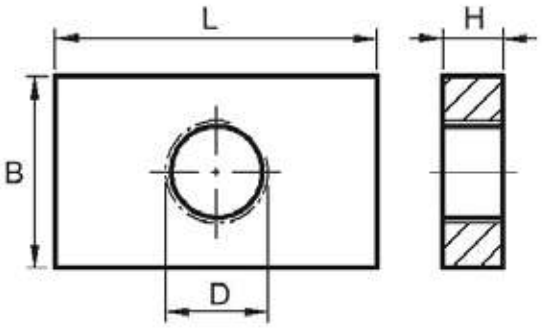

Item code	D	L x B x H	Profil	Package (pcs)
AP5PF04090901	M4	9 x 9 x 3	-	100
AP5PF05090901	M5	9 x 9 x 3	-	100
AP5PF06090901	M6	9 x 9 x 3	-	100
AP5PF04140901	M4	14 x 9 x 2,5	-	100
AP5PF05140901	M5	14 x 9 x 2,5	-	100
AP5PF04141201	M4	14 x 12 x 3	-	100
AP5PF05141201	M5	14 x 12 x 3	-	100
AP5PF06141201	M6	14 x 12 x 3	-	100
AP5PF04151001	M4	15 x 10 x 4	-	100
AP5PF05151001	M5	15 x 10 x 4	-	100
AP5PF06151001	M6	15 x 10 x 4	-	100
AP5PF06150501	M6	15 x 10 x 5	-	100
AP5PF04191601	M4	19 x 16 x 4	I	100
AP5PF05191601	M5	19 x 16 x 4	I	100
AP5PF06191601	M6	19 x 16 x 4	I	100
AP5PF08191601	M8	19 x 16 x 4	I	100
AP5PF04191901	M4	19 x 19 x 4	-	100
AP5PF05191901	M5	19 x 19 x 4	-	100
AP5PF06191901	M6	19 x 19 x 4	-	100
AP5PF08191901	M8	19 x 19 x 4	-	100
AP5PF06201301	M6	20 x 13 x 5	-	100
AP5PF08201301	M8	20 x 13 x 5	-	100
AP5PF08201401	M8	20 x 14 x 6	-	100
AP5PF08201801	M8	20 x 18 x 6	-	100
AP5PF04202001	M4	20 x 20 x 4	B	100
AP5PF05202001	M5	20 x 20 x 4	B	100
AP5PF06202001	M6	20 x 20 x 4	B	100
AP5PF05200601	M5	20 x 20 x 6	B	100
AP5PF06200601	M6	20 x 20 x 6	B	100
AP5PF08202001	M8	20 x 20 x 6	B	100
AP5PF06221501	M6	22 x 15 x 5	-	100
AP5PF06251201	M6	25 x 12 x 5	-	100
AP5PF08301801	M8	30 x 18 x 8	-	100
AP5PF10302001	M10	30 x 20 x 6	-	100
AP5PF08302501	M8	30 x 25 x 5	-	100
AP5PF08300601	M8	30 x 25 x 6	-	100
AP5PF08323001	M8	32 x 30 x 8	-	100
AP5PF06353001	M6	35 x 30 x 5	-	100
AP5PF08434301	M8	43 x 43 x 5	-	100

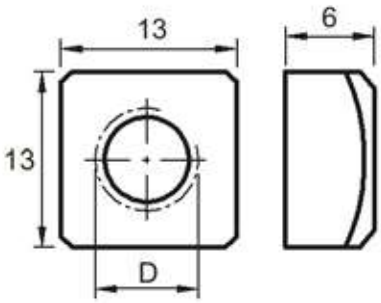

MATERIAL - SURFACE TREATMENT
Zinc platetd steel

NOTES
The nut is inserted into the slot of the profile from the top, the bottom or by rotation.

Item code	D	Slot	Package (pcs)
AP5DQ04080601	M4	8	1.000
AP5DQ05080601	M5	8	1.000
AP5DQ06080601	M6	8	1.000
AP5DQ08080601	M8	8	1.000

AP5DM | SQUARE NUT WITH SPRING

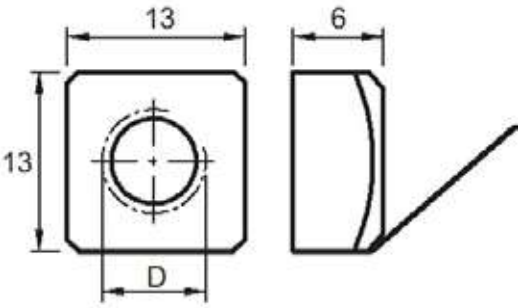

MATERIAL - SURFACE TREATMENT
Zinc platetd steel

NOTES
The nut is inserted into the slot of the profile by rotation. The spring leaf allows the dowel to stay in place.

Item code	D	Slot	Package (pcs)
AP5DM04080601	M4	8	100
AP5DM05080601	M5	8	100
AP5DM06080601	M6	8	100
AP5DM08080601	M8	8	100

MATERIAL - SURFACE TREATMENT
Zinc platetd steel

NOTES
The nut is inserted into the slot of the profile from the top, the bottom or by rotation.

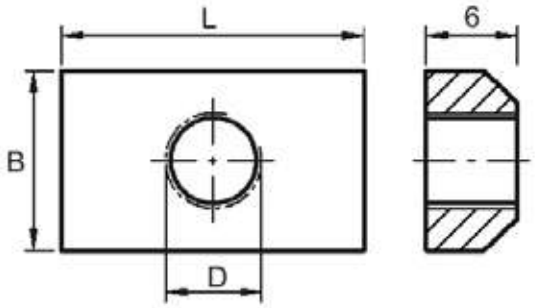

Item code	D	B x L	Slot	Package (pcs)
AP5DR06082001	M6	13 x 20	8	100
AP5DR08082001	M8	13 x 20	8	100
AP5DR08082501	M8	13 x 25	8	100
AP5DR08084001	M8	13 x 40	8	100

SQUARE WASHER | AP5RQ

MATERIAL - SURFACE TREATMENT
Zinc platetd steel

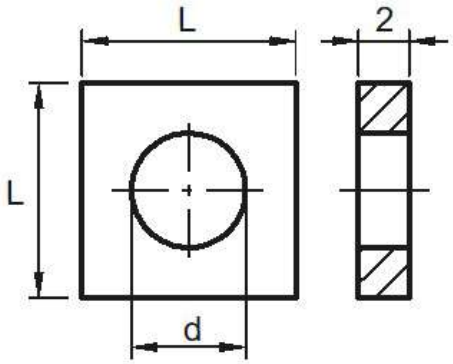

Item code	d	L x L	Slot	Package (pcs)
AP5RQ06061001	6	10x10	6	100
AP5RQ08081301	8	13x13	8	100

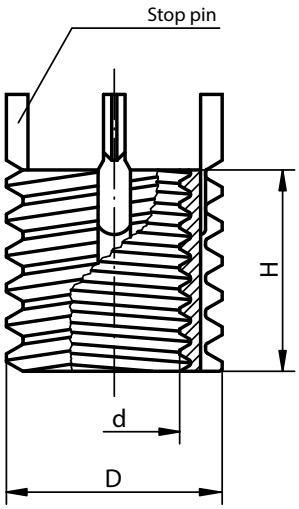

MATERIAL - SURFACE TREATMENT
AC (Steel) phosphated
AISI303 (Stainless steel)

USE
Suitable for use with various materials (even heavy metals and castings) for reuse and/or repair of damaged, lacerated, and seized threaded holes, also allowing the recovery of valuable products.

NOTES
d<M8: have two stopper pins
d>M6: have four stopper pins

Code AC phosphated	Code AISI303	d (6H)	D (6g)	H (±0,25)	Assembly					Dismantling		Package (pcs)
					Diameter tip drilling	Diameter counter-sink +0,25	Diameter male	Depth thread (min)	Code tool	Diameter tip drilling	Depth drilling	
-	**KP0398103001**	M3	M5	4,25	4,4	5,1	M5	5,5	-	3,5	2,25	1
-	**KP0398104001**	M4	M6 x 0,75	5,25	5,5	6,1	M6 x 0,75	6,5	-	4,6	2,5	1
KP039805	**KP0398105**	M5	M8	8	6,9	8,3	M8	9,5	KP0398805	5,5	4	1
KP039806	**KP0398106**	M6	M10 x 1,25	10	8,8	10,3	M10 x 1,25	11,5	KP0398806	7,5	4,8	1
KP039808	**KP0398108**	M8	M12 x 1,25	12	10,8	12,3	M12 x 1,25	13,5	KP0398808	9,5	4,8	1
KP039808X1	**KP0398108X1**	M8 x 1	M12 x 1,25	12	10,8	12,3	M12 x 1,25	13,5	KP0398808	9,5	4,8	1
KP039810	**KP0398110**	M10	M14 x 1,5	14	12,8	14,3	M14 x 1,5	15,5	KP0398810	11,5	4,8	1
KP039810X125	**KP0398110X125**	M10 x 1,25	M14 x 1,5	14	12,8	14,3	M14 x 1,5	15,5	KP0398810	11,5	4,8	1
KP039812	**KP0398112**	M12	M16 x 1,5	16	14,8	16,3	M16 x 1,5	17,5	KP0398812	13,5	4,8	1
KP039812X125	**KP0398112X125**	M12 x 1,25	M16 x 1,5	16	14,8	16,3	M16 x 1,5	17,5	KP0398812	13,5	4,8	1

Assembly instructions

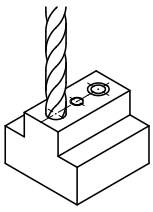

1. Drill and countersink the hole to be tapped or the old thread (82° - 100°)

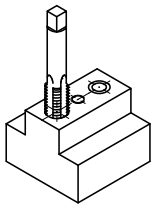

2. Create the required thread with a standard male threader.

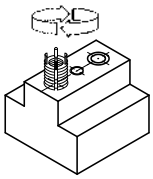

3. Screw in the insert to just below the surface (0,3 - 0,7 mm)

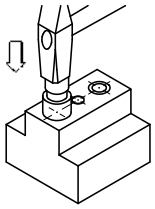

4. Insert the wedges with the assembly tool using a light tap with a hammer.

Dismantling instructions

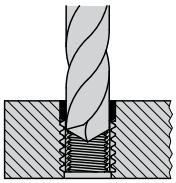

1. Drill the material between the wedges and the internal thread up to the indicated depth.

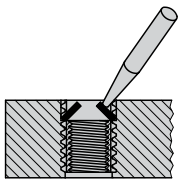

2. Bend the wedges towards the inside and break them off.

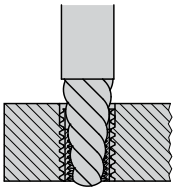

3. Remove the old insert with the screw extractor.

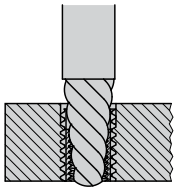

4. Place the new insert in the original threaded hole.

MATERIAL
AISI303 (Stainless steel)

USE
Suitable for use with various materials (even heavy metals and castings) for reuse and/or repair of damaged, lacerated, and seized threaded holes, also allowing the recovery of valuable products.

NOTESS
d<M8: have two stopper pins
d>M6: have four stopper pins

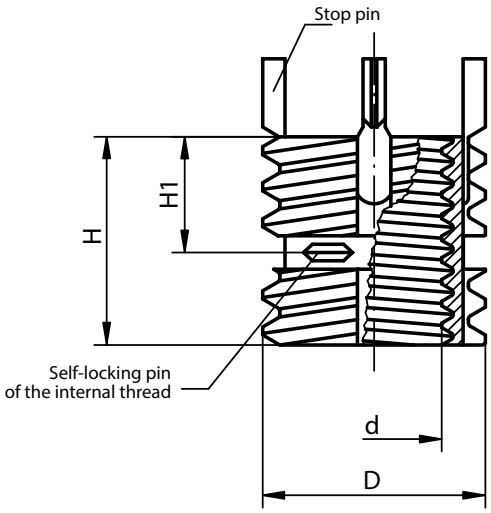

Code AISI303	d (6H)	D (6g)	H1 (±0,25)	H (±0,25)	Assembly					Dismantling		Package (pcs)
					Diameter tip drilling	Diameter countersink +0,25	Diameter male	Depth thread (min)	Code tool	Diameter tip drilling	Depth drilling	
KP0401105	M5	M8	4	8	6,9	8,3	M8	9,5	KP0398805	5,5	4	1
KP0401106	M6	M10 x 1,25	5	10	8,8	10,3	M10 x 1,25	11,5	KP0398806	7,5	4,8	1
KP0401108	M8	M12 x 1,25	6	12	10,8	12,3	M12 x 1,25	13,5	KP0398808	9,5	4,8	1
KP0401110	M10	M14 x 1,5	7	14	12,8	14,3	M14 x 1,5	15,5	KP0398810	11,5	4,8	1
KP0401112	M12	M16 x 1,5	8	16	14,8	16,3	M16 x 1,5	17,5	KP0398812	13,5	4,8	1

Assembly instructions

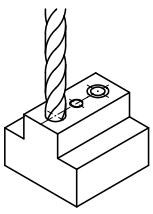

1. Drill and countersink the hole to be tapped or the old thread (82° - 100°)

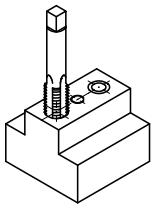

2. Create the required thread with a standard male threader.

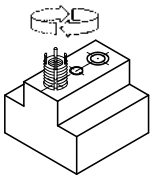

3. Screw in the insert to just below the surface (0,3 - 0,7 mm)

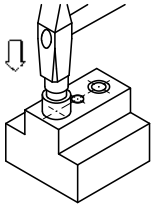

4. Insert the wedges with the assembly tool using a light tap with a hammer.

Dismantling instructions

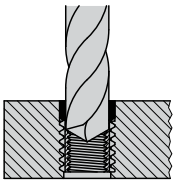

1. Drill the material between the wedges and the internal thread up to the indicated depth.

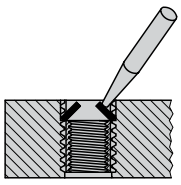

2. Bend the wedges towards the inside and break them off.

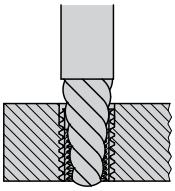

3. Remove the old insert with the screw extractor.

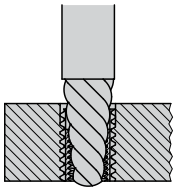

4. Place the new insert in the original threaded hole.

MATERIAL - SURFACE TREATMENT
AC (Steel) HV360 white galvanized
AISI303 (Stainless steel)

USE
Plastic.
Hard and very hard metal.

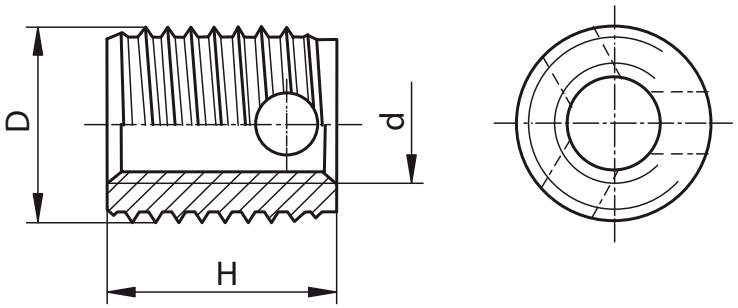

Code AC galvanized white	Code AISI303	d (6H)	D	H	Hole depth (min)	Package (pcs)
BS56100400601	**BS66100400600**	M4 x 0,7	6,5 x 0,8	6	8	100
BS56100400801	**BS66100400800**	M4 x 0,7	6,5 x 0,8	8	10	100
BS56100500701	**BS66100500700**	M5 x 0,8	8 x 1	7	9	100
BS56100501001	**BS66100501000**	M5 x 0,8	8 x 1	10	13	100
BS56100600001	**BS66100600000**	M6 x 1	10 x 1,25	8	10	100
BS56100601201	-	M6 x 1	10 x 1,25	12	15	100
BS56100800901	**BS66100800900**	M8 x 1,25	12 x 1,5	9	11	100
BS56100801401	-	M8 x 1,25	12 x 1,5	14	17	100
BS56101001001	**BS66101000000**	M10 x 1,5	14 x 1,5	10	13	100
BS56101001801	-	M10 x 1,5	14 x 1,5	18	22	100

STANDARD
DIN 179/A

MATERIAL
AC (Steel) HV10 rectified

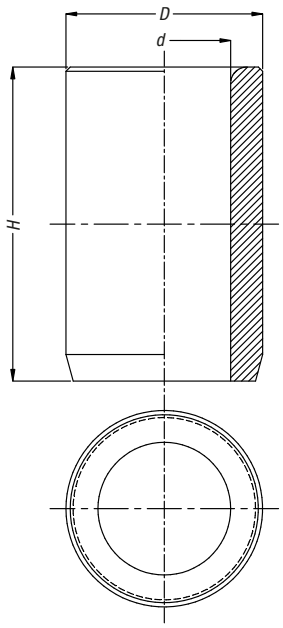

Code	d (F7)	D (n6)	H	Package (pcs)
BML0L00205000	2 ÷ 2,6	5	9	10
BML0000300000	2,7 ÷ 3,3	6	8	10
BML0030612000	2,7 ÷ 3,3	6	12	10
BML0C00400000	3,3 ÷ 4	7	8	10
BML0C00500000	4,1 ÷ 5	8	8	10
BML0C00600000	5,1 ÷ 6	10	10	10
BML0L06101600	5,1 ÷ 6	10	16	10
BML0C00601200	6,1 ÷ 8	12	10	10
BML0071216000	6,1 ÷ 8	12	16	10
BML0C01001500	8,1 ÷ 10	15	12	10
BML0L00900000	8,1 ÷ 10	15	20	10
BML0C01000000	10,1 ÷ 12	18	12	10
BML0101520000	10,1 ÷ 12	18	20	10
BML0C01200000	12,1 ÷ 15	22	16	10
BML0L01200000	12,1 ÷ 15	22	28	10
BML0C01600000	15,25 ÷ 18	26	16	10
BML0162628000	15,25 ÷ 18	26	28	10
BML0C01800000	18,25 ÷ 22	30	20	10
BML0223036000	18,25 ÷ 22	30	36	10
BML0C02200000	22,25 ÷ 26	35	20	10
BML0L02500000	22,25 ÷ 26	35	36	10
BML0C03200000	30,25 ÷ 35	48	25	10
BML0L03000000	30,25 ÷ 35	48	45	10
BML0C03800000	35,5 ÷ 42	55	30	10
BML0L04800000	42,5 ÷ 48	62	56	10
BML0C05000000	48,5 ÷ 55	70	30	10

STANDARD
DIN 172/A

MATERIAL
AC (Steel) HV10 rectified

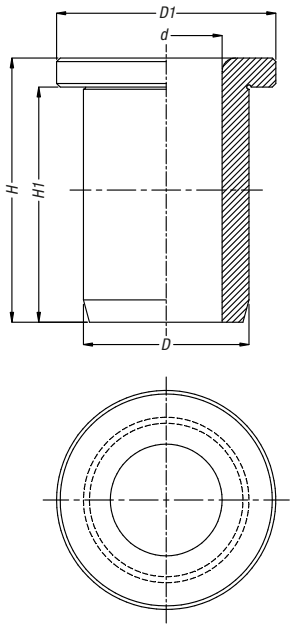

Code	d (F7)	D (n6)	D1	H	H1	Package (pcs)
BMC0C20500600	2 ÷ 2,6	5	8	6	4	10
BMC0L20500900	2 ÷ 2,6	5	8	9	7	10
BMC0C30300800	2,7 ÷ 3,3	6	9	8	5,5	10
BMC0C0050800	4,1 ÷ 5	8	11	8	5,5	10
BMC0C00601000	5,1 ÷ 6	10	13	10	7	10
BMC0C60201000	6,1 ÷ 8	12	15	10	7	10
BMC0C00800000	6,1 ÷ 8	12	15	16	13	10
BMC0C01000000	8,1 ÷ 10	15	18	12	9 / 8	10
BMC0L10200000	8,1 ÷ 10	15	18	20	17 / 16	10
BMC0C01001200	10,1 ÷ 12	18	22	12	8	10
BMC0L01000000	10,1 ÷ 12	18	22	20	16	10
BMC0C01300000	12,1 ÷ 15	22	26	16	12	10
BMC0L01400000	12,1 ÷ 15	22	26	28	24	10
BMC0C01702800	15,25 ÷ 18	26	30	28	24	1
BMC0C0200000	18,25 ÷ 22	30	34	20	15	1
BMC0C02203600	18,25 ÷ 22	30	34	36	31	1
BMC0C02500000	22,25 ÷ 26	35	39	20	15	1
BMC0C03003600	26,25 ÷ 30	42	46	36	31	1
BMC0L03500000	35,5 ÷ 42	55	59	45	40	1
BMC0L03000000	35,5 ÷ 42	55	59	56	51	1

STANDARD
DIN 705/A

MATERIAL - SURFACE TREATMENT
AC (Steel)
AC (Steel) galvanized white
AISI304 (Stainless steel)

ACCESSORIES
Clamping grub screw included only where indicated in the table.

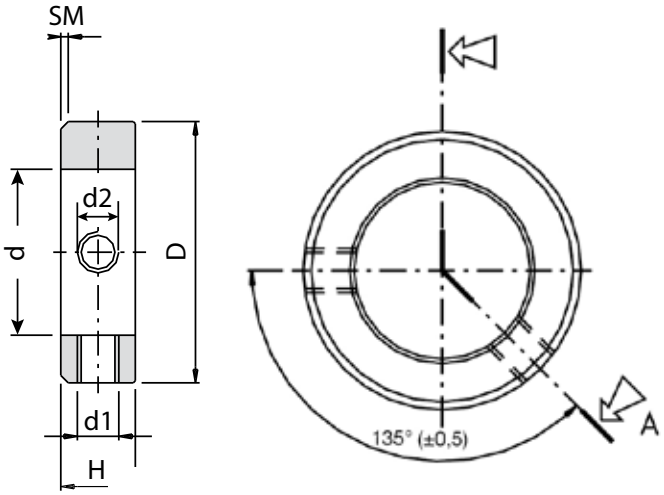

Code AC	Code AC galvanized white	Code AISI304	d (H8)	D (H13)	H (js14)	d1	d2	SM	Number of grub screws included DIN 553	Number of grub screws included DIN 914	Package (pcs)
AN55A00415300	**AN55A00415301**	-	4	8	5	M2,5	No	0,6 x 45°	1	-	25
AN55A00515300	**AN55A00515301**		5	10	6	M3	No	0,6 x 45°	1	-	25
.	.	**AN65A00511400**	5	10	6	M3	No	0,6 x 45°	-	1	100
-	-	**AN65A00611400**	6	12	8	M4	No	0,8 x 45°	-	1	100
-	-	**AN65A00620000**	6	12	8	M4	M4	0,8 x 45°	-	-	50
AN55A00615300	**AN55A00615301**	-	6	12	8	M4	No	0,8 x 45°	1	-	25
-	-	**AN65A00811400**	8	16	8	M4	No	0,8 x 45°	-	1	100
AN55A00815300	**AN55A00815301**	-	8	16	8	M4	No	0,8 x 45°	1	-	25
-	-	**AN65A00820000**	8	16	8	M4	M4	0,8 x 45°	-	-	50
AN55A00915300	**AN55A00915301**	-	9	18	10	M4	No	1 x 45°	1	-	25
-	-	**AN65A00911400**	9	18	10	M4	No	1 x 45°	-	1	100
AN55A01015300	**AN55A01015301**	-	10	20	10	M5	No	1 x 45°	1	-	25
-	-	**AN65A01011400**	10	20	10	M5	No	1 x 45°	-	1	50
-	-	**AN65A01020000**	10	20	10	M5	M5	1 x 45°	-	-	50
AN55A01215300	**AN55A01215301**	-	12	22	12	M6	No	1,2 x 45°	1	-	10
-	-	**AN65A01211400**	12	22	12	M6	No	1,2 x 45°	-	1	50
-	-	**AN65A01220000**	12	22	12	M6	M6	1,2 x 45°	-	-	50
AN55A01315300	-	-	13	22	12	M6	No	1,2 x 45°	1	-	10
-	-	**AN65A01311400**	13	22	12	M6	No	1,2 x 45°	-	1	50
AN55A01415300	**AN55A01415301**	-	14	25	12	M6	No	1,2 x 45°	1	-	10
-	-	**AN65A01411400**	14	25	12	M6	No	1,2 x 45°	-	1	50
AN55A01515300	**AN55A01515301**	-	15	25	12	M6	No	1,2 x 45°	1	-	10
-	-	**AN65A01511400**	15	25	12	M6	No	1,2 x 45°	-	1	50
-	-	**AN65A01520000**	15	25	12	M6	M6	1,2 x 45°	-	-	50
AN55A01615300	**AN55A01615301**	-	16	25	12	M6	No	1,2 x 45°	1	-	10
-	-	**AN65A01611400**	16	25	12	M6	No	1,2 x 45°	-	1	50
-	-	**AN65A01620000**	16	25	12	M6	M6	1,2 x 45°	-	-	50
-	**AN55A01715301**	-	17	28	12	M6	No	1,2 x 45°	1	-	10
-	-	**AN65A01720000**	17	28	12	M6	M6	1,2 x 45°	-	-	50

STANDARD
DIN 705/A

MATERIAL - SURFACE TREATMENT
AC (Steel)
AC (Steel) galvanized white
AISI304 (Stainless steel)

ACCESSORIES
Clamping grub screw included only where indicated in the table.

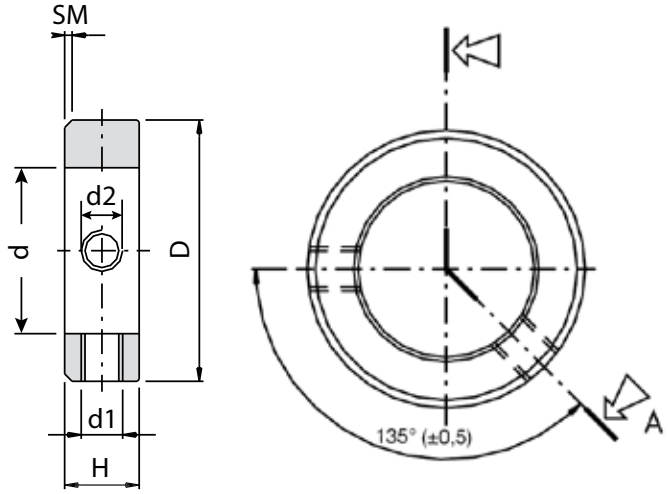

Code AC	Code AC galvanized white	Code AISI304	d (H8)	D (H13)	H (js14)	d1	d2	SM	Number of grub screws included DIN 553	Number of grub screws included DIN 914	Package (pcs)
AN55A01815300	**AN55A01815301**	-	18	32	14	M6	No	1,4 x 45°	1	-	10
-	-	**AN65A01811400**	18	32	14	M6	No	1,4 x 45°	-	1	25
AN55A02015300	**AN55A02015301**	-	20	32	14	M6	No	1,4 x 45°	1	-	10
-	-	**AN65A02011400**	20	32	14	M6	No	1,4 x 45°	-	1	25
-	-	**AN65A02020000**	20	32	14	M6	M6	1,4 x 45°	-	-	50
AN55A02215300	**AN55A02215301**	-	22	36	14	M6	No	1,4 x 45°	1	-	10
-	-	**AN65A02211400**	22	36	14	M6	No	1,4 x 45°	-	1	25
AN55A02415300	-	-	24	40	16	M8	No	1,6 x 45°	1	-	10
-	-	**AN65A02411400**	24	40	16	M8	No	1,6 x 45°	-	1	25
AN55A02515300	**AN55A02515301**	-	25	40	16	M8	No	1,6 x 45°	1	-	10
-	-	**AN65A02511400**	25	40	16	M8	No	1,6 x 45°	-	1	25
-	-	**AN65A02520000**	25	40	16	M8	M8	1,6 x 45°	-	-	50
AN55A02615300	-	-	26	40	16	M8	No	1,6 x 45°	1	-	10
AN55A02815300	**AN55A02815301**	-	28	45	16	M8	No	1,6 x 45°	1	-	10
-	-	**AN65A02811400**	28	45	16	M8	No	1,6 x 45°	-	1	25
AN55A03015300	**AN55A03015301**	-	30	45	16	M8	No	1,6 x 45°	1	-	10
-	-	**AN65A03011400**	30	45	16	M8	No	1,6 x 45°	-	1	25
-	-	**AN65A03020000**	30	45	16	M8	M8	1,6 x 45°	-	-	25
AN55A03215300	**AN55A03215301**	-	32	50	16	M8	No	1,6 x 45°	1	-	10
-	-	**AN65A03211400**	32	50	16	M8	No	1,6 x 45°	-	1	10
AN55A03415300	-	-	34	50	16	M8	No	1,6 x 45°	1	-	5
-	-	**AN65A03411400**	34	50	16	M8	No	1,6 x 45°	-	1	10
AN55A03515300	**AN55A03515301**	-	35	56	16	M8	No	1,6 x 45°	1	-	5
-	-	**AN65A03511400**	35	56	16	M8	No	1,6 x 45°	-	1	10
-	-	**AN65A03520000**	35	56	16	M8	M8	1,6 x 45°	-	-	25
AN55A03615300	**AN55A03615301**	-	36	56	16	M8	No	1,6 x 45°	1	-	5
-	-	**AN65A03611400**	36	56	16	M8	No	1,6 x 45°	-	1	10
AN55A03815300	-	-	38	56	16	M8	No	-	1	-	5
-	-	**AN65A03811400**	38	56	16	M8	No	-	-	1	10

STANDARD
DIN 705/A

MATERIAL - SURFACE TREATMENT
AC (Steel)
AC (Steel) galvanized white
AISI304 (Stainless steel)

ACCESSORIES
Clamping grub screw included only where indicated in the table.

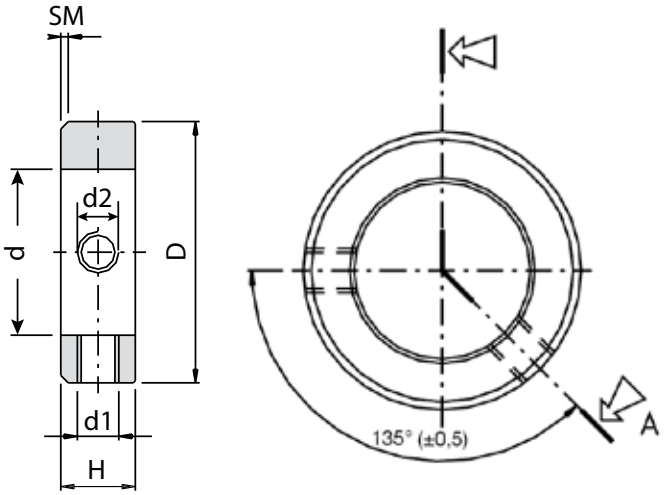

Code AC	Code AC galvanized white	Code AISI304	d (H8)	D (H13)	H (js14)	d1	d2	SM	Number of grub screws included DIN 553	Number of grub screws included DIN 914	Package (pcs)
AN55A04015300	**AN55A04015301**	-	40	63	18	M10	No	1,8 x 45°	1	-	5
-	-	**AN65A04011400**	40	63	18	M10	No	1,8 x 45°	-	1	10
-	-	**AN65A04020000**	40	63	18	M10	M10	1,8 x 45°	-	-	25
AN55A04215300	**AN55A04215301**	-	42	63	18	M10	No	1,8 x 45°	1	-	5
AN55A04515300	**AN55A04515301**	-	45	70	18	M10	No	1,8 x 45°	1	-	1
-	-	**AN65A04511400**	45	70	18	M10	No	1,8 x 45°	-	1	5
AN55A05015300	**AN55A05015301**	-	50	80	18	M10	No	1,8 x 45°	1	-	1
-	-	**AN65A05020000**	50	80	18	M10	M10	1,8 x 45°	-	-	25
AN55A05515300	**AN55A05515301**	-	55	80	18	M10	No	1,8 x 45°	1	-	1
AN55A06015300	**AN55A06015301**	-	60	90	20	M10	No	2 x 45°	1	-	1
-	-	**AN65A06011400**	60	90	20	M10	No	2 x 45°	-	1	5
AN55A06515300	**AN55A06515301**	-	65	100	20	M10	No	2 x 45°	1	-	1
AN55A07015300	**AN55A07015301**	-	70	100	20	M10	No	2 x 45°	1	-	1
AN55A07521400	**AN55A07521401**	-	75	110	22	M12	M12	-	-	2	1
AN55A08021400	**AN55A08021401**	-	80	110	22	M12	M12	-	-	2	1
AN55A08521400	-	-	85	125	22	M12	M12	-	-	2	1
AN55A09021400	**AN55A09021401**	-	90	125	22	M12	M12	-	-	2	1
AN55A10021400	-	-	100	140	25	M12	M12	-	-	2	1
AN55A11021400	-	-	110	160	25	M12	M12	-	-	2	1
AN55A12021400	-	-	120	160	25	M12	M12	-	-	2	1
AN55A12521400	-	-	125	180	28	M16	M16	-	-	2	1
AN55A13021400	-	-	130	180	28	M16	M16	-	-	2	1
AN55A14021400	-	-	140	200	28	M16	M16	-	-	2	1

STANDARD
DIN 705/C

MATERIAL - SURFACE TREATMENT
AC (Steel) burnished
AC (Steel) galvanized white

ACCESSORIES
Clamping grub screw included only where indicated in the table.

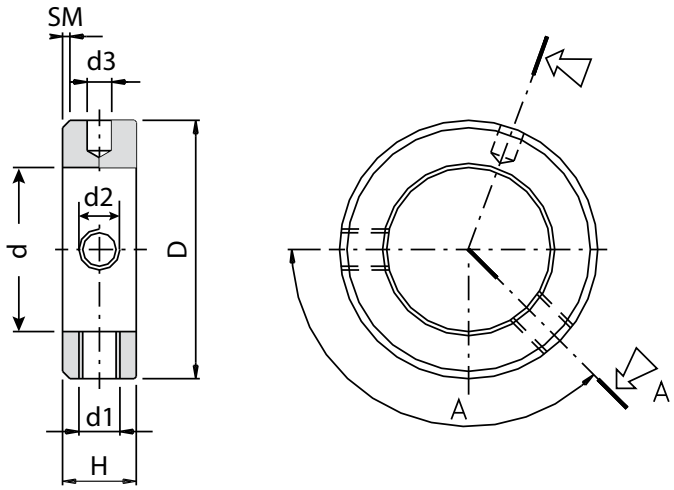

Code AC burnished	Code AC galvanized white	d (H8)	D (H13)	H (js14)	d1	d2	d3 (H11)	SM	A (±0,5)	Number of grub screws included DIN 553	Number of grub screws included DIN 914	Package (pcs)
-	**AN55C00320001**	3	8	5	M2,5	M2,5	-	0,6 x 45°	135°	-	-	200
AN55C00520003	**AN55C00520001**	5	10	6	M3	M3	-	0,6 x 45°	135°	-	-	200
AN55C00620003	**AN55C00620001**	6	12	8	M4	M4	1,5	0,8 x 45°	135°	-	-	200
AN55C00820003	**AN55C00820001**	8	16	8	M4	M4	1,5	0,8 x 45°	135°	-	-	200
AN55C01020003	**AN55C01020001**	10	20	10	M5	M5	3	1 x 45°	135°	-	-	200
AN55C01220003	**AN55C01220001**	12	22	12	M6	M6	4	1,2 x 45°	135°	-	-	100
AN55C01420003	**AN55C01420001**	14	25	12	M6	M6	4	1,2 x 45°	135°	-	-	100
AN55C01520003	**AN55C01520001**	15	25	12	M6	M6	4	1,2 x 45°	135°	-	-	100
AN55C01620003	**AN55C01620001**	16	25	12	M6	M6	4	1,2 x 45°	135°	-	-	100
AN55C01720003	**AN55C01720001**	17	28	12	M6	M6	4	1,2 x 45°	135°	-	-	100
AN55C01820003	**AN55C01820001**	18	32	14	M6	M6	4	1,2 x 45°	135°	-	-	100
AN55C01920003	**AN55C01920001**	19	32	14	M6	M6	4	1,2 x 45°	135°	-	-	100
AN55C02020003	**AN55C02020001**	20	32	14	M6	M6	4	1,2 x 45°	135°	-	-	100
AN55C02520003	**AN55C02520001**	25	40	16	M8	M8	6	1,6 x 45°	135°	-	-	100
AN55C02820003	**AN55C02820001**	28	45	16	M8	M8	6	1,6 x 45°	135°	-	-	50
AN55C03020003	**AN55C03020001**	30	45	16	M8	M8	6	1,6 x 45°	135°	-	-	50
AN55C03220003	**AN55C03220001**	32	50	16	M8	M8	6	1,6 x 45°	135°	-	-	50
AN55C03520003	**AN55C03520001**	35	56	16	M8	M8	6	1,6 x 45°	135°	-	-	50
AN55C04020003	**AN55C04020001**	40	63	18	M10	M10	8	1,8 x 45°	135°	-	-	25
AN55C04520003	**AN55C04520001**	45	70	18	M10	M10	8	1,8 x 45°	135°	-	-	25
AN55C05020003	**AN55C05020001**	50	80	18	M10	M10	8	1,8 x 45°	135°	-	-	25
AN55C05520003	**AN55C05520001**	55	80	18	M10	M10	8	1,8 x 45°	135°	-	-	25
AN55C06020003	**AN55C06020001**	60	90	20	M10	M10	8	1,8 x 45°	135°	-	-	25
AN55C06520003	**AN55C06520001**	65	100	20	M10	M10	8	1,8 x 45°	135°	-	-	25
AN55C07020003	**AN55C07020001**	70	100	20	M10	M10	8	1,8 x 45°	135°	-	-	25

MATERIAL
AC (Steel)

SURFACE TREATMENT
Burnished

ACCESSORIES
Clamping screw always included.

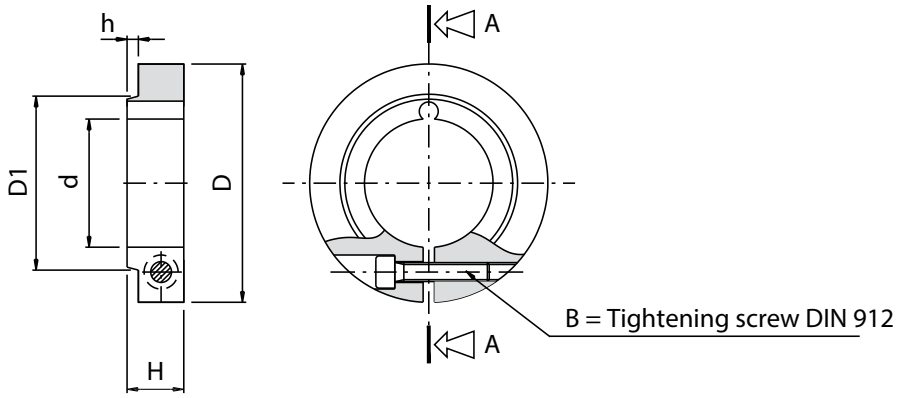

Code AC burnished	d (H8)	D (H13)	H (j14)	D1	h	B	B Tightening torque (Nm)	Package (pcs)
AN5R101000003	10	32	11	15	1	M4 x 12	3,1	50
AN5R101500003	15	40	13	20	1	M4 x 12	3,1	50
AN5R102000003	20	45	13	20	1	M4 x 12	3,1	50
AN5R102500003	25	50	13	20	1	M4 x 12	3,1	25
AN5R103000003	30	55	14	38	1,2	M6 x 16	10,5	25
AN5R103500003	35	63	17	45	1,2	M6 x 16	10,5	25
AN5R104000003	40	70	17	45	1,2	M6 x 16	10,5	25
AN5R104500003	45	80	20	55	1,5	M8 x 25	25	25
AN5R105000003	50	80	20	60	1,5	M8 x 25	25	25

MATERIAL
AC (Steel)

SURFACE TREATMENT
Burnished

ACCESSORIES
Clamping screw always included.

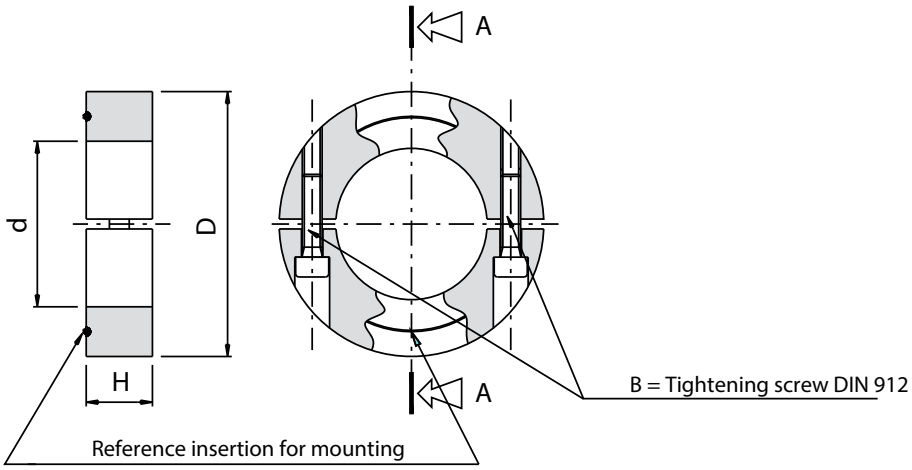

Code AC burnished	d (H8)	D (H13)	H (j14)	B	B Tightening torque (Nm)	Package (pcs)
AN5R201000003	10	32	10	M4 x 12	3,1	50
AN5R201500003	15	40	12	M5 x 14	6,2	50
AN5R202000003	20	45	12	M5 x 14	6,2	50
AN5R202500003	25	50	12	M5 x 14	6,2	25
AN5R203000003	30	55	12	M5 x 14	6,2	25
AN5R203500003	35	63	12	M5 x 14	6,2	25
AN5R204000003	40	70	14	M6 x 25	10,5	25
AN5R204500003	45	80	14	M6 x 25	10,5	25
AN5R205000003	50	80	14	M6 x 25	10,5	25

STANDARD
ISO12240-4/K

MATERIAL - SURFACE TREATMENT
Body: (d<14) 11SMnPb30 (Steel) white galvanized
(d>12) C40 (Steel) galvanized white
Sphere: 100Cr6 (Steel) lubricated rectified tempered
Bushing: Self-lubricating sintered bronze

COUPLING
Self-lubricating Steel-Bronze

USE
Precision mechanics, high speed.

NOTES
* 1 DaN (decanewton) = 1.02 Kgf (kilogram-force).

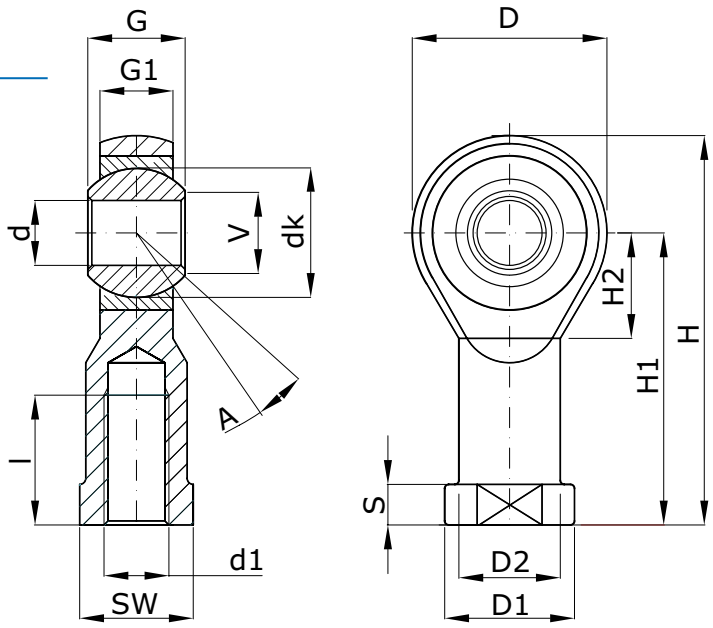

Code	Bore	d (H7)	d1 (6H)	Thread direction	dk	D	D2	D1	G	G1	H	H1	H2	l	S	V	SW	A	Radial static load (DaN) *	Package (pcs)
SN51F0040ADS6	8 - 10	5	M4	Right	11,11	18	9	11	8	6	36	27	10	10	4	7,7	9	13°	600	30
SN51F0040ASS6	8 - 10	5	M4	Left	11,11	18	9	11	8	6	36	27	10	10	4	7,7	9	13°	600	30
SN51F0050ADS6	-	5	M5	Right	11,11	18	9	11	8	6	36	27	10	10	4	7,7	9	13°	600	30
SN51F0050ASS6	-	5	M5	Left	11,11	18	9	11	8	6	36	27	10	10	4	7,7	9	13°	600	30
SN51F0060ADS6	12 - 16	6	M6	Right	12,7	20	10	13	9	6,75	40	30	11	12	5	8,9	11	13°	700	50
SN51F0060ASS6	12 - 16	6	M6	Left	12,7	20	10	13	9	6,75	40	30	11	12	5	8,9	11	13°	700	50
SN51F0080ADS6	20	8	M8	Right	15,87	24	12,5	16	12	9	48	36	13	16	5	10,4	14	13°	1.200	40
SN51F0080ASS6	20	8	M8	Left	15,87	24	12,5	16	12	9	48	36	13	16	5	10,4	14	13°	1.200	40
SN51F0100ADS6	-	10	M10	Right	19,05	28	15	19	14	10,5	57	43	15	20	6,5	12,9	17	13°	1.400	30
SN51F0100ASS6	-	10	M10	Left	19,05	28	15	19	14	10,5	57	43	15	20	6,5	12,9	17	13°	1.400	30
SN51F0100BDS6	25 - 32	10	M10 x 1,25	Right	19,05	28	15	19	14	10,5	57	43	15	20	6,5	12,9	17	13°	1.400	30
SN51F0100BSS6	25 - 32	10	M10 x 1,25	Left	19,05	28	15	19	14	10,5	57	43	15	20	6,5	12,9	17	13°	1.400	30
SN51F0120ADS6	-	12	M12	Right	22,22	32	17,5	22	16	12	66	50	17	22	6,5	15,4	19	13°	1.900	15
SN51F0120ASS6	-	12	M12	Left	22,22	32	17,5	22	16	12	66	50	17	22	6,5	15,4	19	13°	1.900	15
SN51F0120BDS6	40 - 50	12	M12 x 1,25	Right	22,22	32	17,5	22	16	12	66	50	17	22	6,5	15,4	19	13°	1.900	15
SN51F0120BSS6	40 - 50	12	M12 x 1,25	Left	22,22	32	17,5	22	16	12	66	50	17	22	6,5	15,4	19	13°	1.900	15
SN51F0140ADS6	-	14	M14	Right	25,4	36	20	25	19	13,5	75	57	19	25	8	16,8	22	15°	3.600	10
SN51F0140ASS6	-	14	M14	Left	25,4	36	20	25	19	13,5	75	57	19	25	8	16,8	22	15°	3.600	10
SN51F0160ADS6	-	16	M16	Right	28,57	42	22	27	21	15	85	64	23	28	8	19,3	22	15°	4.800	10
SN51F0160ASS6	-	16	M16	Left	28,57	42	22	27	21	15	85	64	23	28	8	19,3	22	15°	4.800	10
SN51F0160BDS6	50 - 63	16	M16 x 1,5	Right	28,57	42	22	27	21	15	85	64	23	28	8	19,3	22	15°	4.800	10
SN51F0160BSS6	50 - 63	16	M16 x 1,5	Left	28,57	42	22	27	21	15	85	64	23	28	8	19,3	22	15°	4.800	10
SN51F0180BDS6	-	18	M18 x 1,5	Right	31,75	46	25	31	23	16,5	94	71	25	32	10	21,8	27	15°	5.100	10
SN51F0180BSS6	-	18	M18 x 1,5	Left	31,75	46	25	31	23	16,5	94	71	25	32	10	21,8	27	15°	5.100	10

A-BA FEMALE JUNCTION HEAD
steel

STANDARD
ISO12240-4/K

MATERIAL - SURFACE TREATMENT
Body: (d<14) 11SMnPb30 (Steel) white galvanized
(d>12) C40 (Steel) galvanized white
Sphere: 100Cr6 (Steel) lubricated rectified tempered
Bushing: Self-lubricating sintered bronze

COUPLING
Self-lubricating Steel-Bronze

USE
Precision mechanics, high speed.

NOTES
* 1 DaN (decanewton) = 1.02 Kgf (kilogram-force).

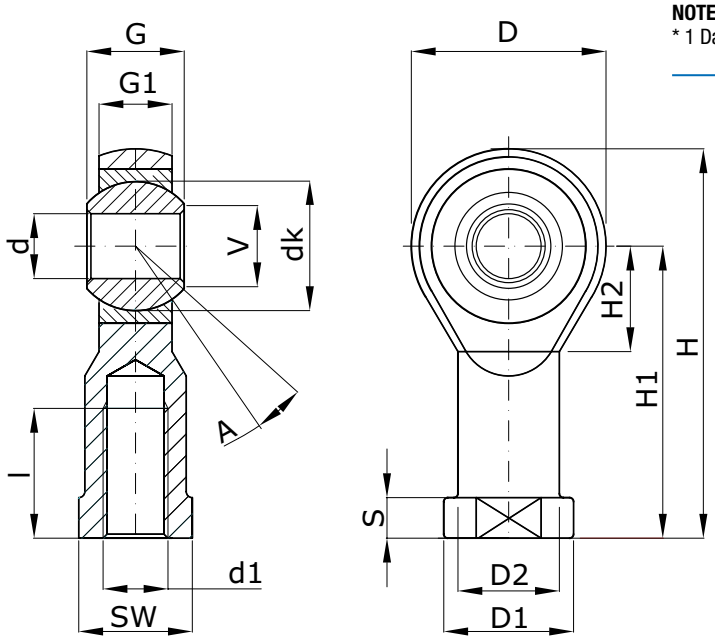

Code	Bore	d (H7)	d1 (6H)	Thread direction	dk	D	D2	D5	G	G1	H	H1	H2	l	S	V	SW	A	Radial static load (DaN) *	Package (pcs)
SN51F0200ADS6	-	20	M20	Right	34,92	50	27,5	34	25	18	102	77	27	33	10	24,3	30	14°	5.200	10
SN51F0200ASS6	-	20	M20	Left	34,92	50	27,5	34	25	18	102	77	27	33	10	24,3	30	14°	5.200	10
SN51F0200BDS6	80 - 100	20	M20 x 1,5	Right	34,92	50	27,5	34	25	18	102	77	27	33	10	24,3	30	14°	5.200	10
SN51F0200BSS6	80 - 100	20	M20 x 1,5	Left	34,92	50	27,5	34	25	18	102	77	27	33	10	24,3	30	14°	5.200	10
SN51F0220BDS6	-	22	M22 x 1,5	Right	38,1	54	30	37	28	20	111	84	29	37	12	25,8	32	15°	7.500	4
SN51F0220BSS6	-	22	M22 x 1,5	Left	38,1	54	30	37	28	20	111	84	29	37	12	25,8	32	15°	7.500	4
SN51F0240BDS6	125	25	M24 x 2	Right	42,85	60	33,5	42	31	22	124	94	32	42	12	29,5	36	15°	8.500	4
SN51F0240BSS6	125	25	M24 x 2	Left	42,85	60	33,5	42	31	22	124	94	32	42	12	29,5	36	15°	8.500	4
SN51F0270BDS6	125	30	M27 x 2	Right	50,8	70	40	50	37	25	145	110	36	51	15	34,8	41	17°	10.800	4
SN51F0270BSS6	128	30	M27 x 2	Left	50,8	70	40	50	37	25	145	110	36	51	15	34,8	41	17°	10.800	4
SN51F0300BDS6	-	30	M30 x 2	Right	50,8	70	40	50	37	25	145	110	36	51	15	34,8	41	17°	10.800	4
SN51F0300BSS6	-	30	M30 x 2	Left	50,8	70	40	50	37	25	145	110	36	51	15	34,8	41	17°	10.800	4
SN51F0360UDS6	160 - 200	35	M36 x 2	Right	57,15	80	46	58	43	28	165	125	41	56	17	37,7	50	19°	12.400	2
SN51F0360USS6	160 - 200	35	M36 x 2	Left	57,15	80	46	58	43	28	165	125	41	56	17	37,7	50	19°	12.400	2

STANDARD
ISO12240-4/K

MATERIAL - SURFACE TREATMENT
Body: (d<14) 11SMnPb30 (Steel) white galvanized
(d>12) C40 (Steel) galvanized white
Sphere: 100Cr6 (Steel) lubricated rectified tempered
Bushing: Self-lubricating sintered bronze

COUPLING
Self-lubricating Steel-Bronze

USE
Precision mechanics, high speed.

NOTES
* 1 DaN (decanewton) = 1.02 Kgf (kilogram-force).

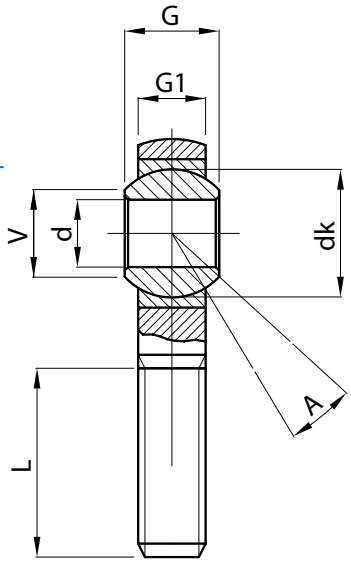

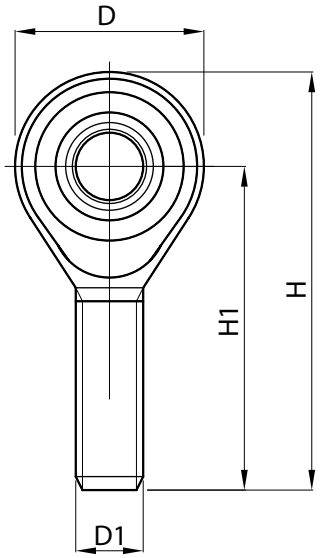

Code	d (H7)	D1 (6g)	Direction thread	dk	D	G	G1	H	H1	L	V	A	Radial static load (DaN) *	Package (pcs)
SN51M0050ADS6	5	M5	Right	11,1	18	8	6	42	33	19	7,7	13°	300	30
SN51M0050ASS6	5	M5	Left	11,1	18	8	6	42	33	19	7,7	13°	300	30
SN51M0060ADS6	6	M6	Right	12,7	20	9	6,75	46	36	21	8,9	13°	400	50
SN51M0060ASS6	6	M6	Left	12,7	20	9	6,75	46	36	21	8,9	13°	400	50
SN51M0080ADS6	8	M8	Right	15,87	24	12	9	54	42	25	10,4	14°	800	40
SN51M0080ASS6	8	M8	Left	15,87	24	12	9	54	42	25	10,4	14°	800	40
SN51M0100ADS6	10	M10	Right	19,05	28	14	10,5	62	48	28	12,9	13°	1.300	30
SN51M0100ASS6	10	M10	Left	19,05	28	14	10,5	62	48	28	12,9	13°	1.300	30
SN51M0120ADS6	12	M12	Right	22,22	32	16	12	70	54	32	15,4	13°	1.700	15
SN51M0120BDS6	12	M12 x 1,25	Right	22,22	32	16	12	70	54	32	15,4	13°	1.700	0
SN51M0120ASS6	12	M12	Left	22,22	32	16	12	70	54	32	15,4	13°	1.700	15
SN51M0140ADS6	14	M14	Right	25,4	36	19	13,5	78	60	36	16,8	15°	3.600	10
SN51M0140ASS6	14	M14	Left	25,4	36	19	13,5	78	60	36	16,8	15°	3.600	10
SN51M0160ADS6	16	M16	Right	28,57	42	21	15	87	66	37	19,3	15°	4.800	10
SN51M0160ASS6	16	M16	Left	28,57	42	21	15	87	66	37	19,3	15°	4.800	10
SN51M0160BDS6	16	M16 x 1,5	Right	28,57	42	21	15	87	66	37	19,3	15°	4.800	10
SN51M0160BSS6	16	M16 x 1,5	Left	28,57	42	21	15	87	66	37	19,3	15°	4.800	10
SN51M0180BDS6	18	M18 x 1,5	Right	31,75	46	23	16,5	95	72	41	21,8	15°	5.100	10
SN51M0180BSS6	18	M18 x 1,5	Left	31,75	46	23	16,5	95	72	41	21,8	15°	5.100	10
SN51M0200ADS6	20	M20	Right	34,52	50	25	18	103	78	45	24,3	14°	5.200	10
SN51M0200ASS6	20	M20	Left	34,92	50	25	18	103	78	45	24,3	14°	5.200	10
SN51M0200BDS6	20	M20 x 1,5	Right	34,52	50	25	18	103	78	45	24,3	14°	5.200	10
SN51M0200BSS6	20	M20 x 1,5	Left	34,92	50	25	18	103	78	45	24,3	14°	5.200	10
SN51M0220BDS6	22	M22 x 1,5	Right	38,1	54	28	20	111	84	48	25,8	15°	7.500	10
SN51M0220BSS6	22	M22 x 1,5	Left	38,1	54	28	20	111	84	48	25,8	15°	7.500	10
SN51M0240BDS6	25	M24 x 2	Right	42,85	60	31	22	124	94	55	29,5	15°	8.500	4
SN51M0240BSS6	25	M24 x 2	Left	42,85	60	31	22	124	94	55	29,5	15°	8.500	4
SN51M0300BDS6	30	M30 x 2	Right	50,8	70	37	25	145	110	66	34,8	15°	10.800	4
SN51M0300BSS6	30	M30 x 2	Left	50,8	70	37	25	145	110	66	34,8	15°	10.800	4
SN51M0360UDS6	35	M36 x 2	Right	57,15	80	43	28	180	140	85	37,7	19°	12.400	2
SN51M0360USS6	35	M36 x 2	Left	57,15	80	43	28	180	140	85	37,7	19°	12.400	2

I-BA FEMALE JUNCTION HEAD
stainless steel

STANDARD
ISO12240-4/K

MATERIAL - SURFACE TREATMENT
Body: AISI304 (Stainless steel)
Sphere: AISI420 (Stainless steel)
Bushing: Self-lubricating sintered bronze

COUPLING
Self-lubricating Stainless Steel-Bronze

USE
Precision mechanics, exposure to oxidizing/corrosive atmosphere.

NOTES
* 1 DaN (decanewton) = 1.02 Kgf (kilogram-force).

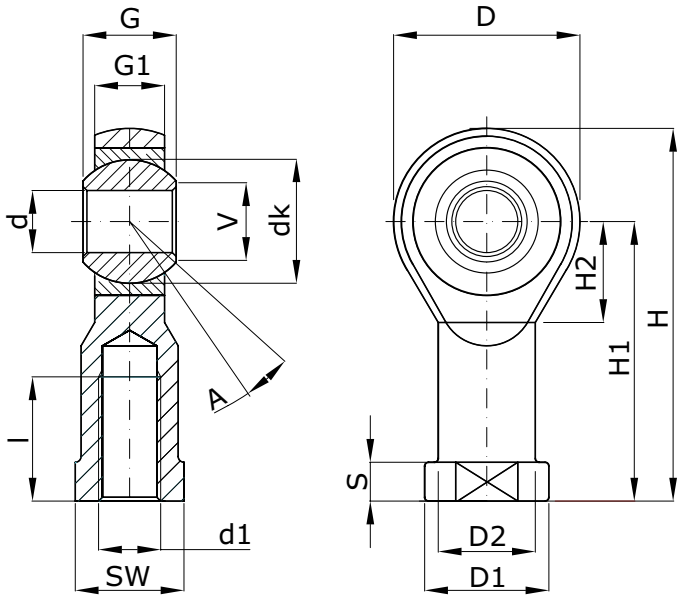

Code	Bore	d (H7)	d1 (6H)	Direction thread	dk	D	D1	D2	G	G1	H	H1	H2	l	S	V	SW	A	Radial static load (DaN) *	Package (pcs)
SN61F0050AD00	-	5	M5	Right	11,11	18	11	9	8	6	36	27	10	10	4	7,7	9	13°	600	30
SN61F0050AS00	-	5	M5	Left	11,11	18	11	9	8	6	36	27	10	10	4	7,7	9	13°	600	30
SN61F0060AD00	12 - 16	6	M6	Right	12,7	20	13	10	9	6,75	40	30	11	12	5	8,9	11	13°	700	50
SN61F0060AS00	12 - 16	6	M6	Left	12,7	20	13	10	9	6,75	40	30	11	12	5	8,9	11	13°	700	50
SN61F0080AD00	20	8	M8	Right	15,87	24	16	12,5	12	9	48	36	13	16	5	10,4	14	14°	1.200	40
SN61F0080AS00	20	8	M8	Left	15,87	24	16	12,5	12	9	48	36	13	16	5	10,4	14	14°	1.200	40
SN61F0100AD00	-	10	M10	Right	19,05	28	19	15	14	10,5	57	43	15	20	6,5	12,9	17	13°	1.400	30
SN61F0100AS00	-	10	M10	Left	19,05	28	19	15	14	10,5	57	43	15	20	6,5	12,9	17	13°	1.400	30
SN61F0100BD00	25 - 32	10	M10 x 1,25	Right	19,05	28	19	15	14	10,5	57	43	15	20	6,5	12,9	17	13°	1.400	30
SN61F0100BS00	25 - 32	10	M10 x 1,25	Left	19,05	28	19	15	14	10,5	57	43	15	20	6,5	12,9	17	13°	1.400	30
SN61F0120AD00	-	12	M12	Right	22,22	32	22	17,5	16	12	66	50	17	22	6,5	15,4	19	13°	1.900	15
SN61F0120AS00	-	12	M12	Left	22,22	32	22	17,5	16	12	66	50	17	22	6,5	15,4	19	13°	1.900	15
SN61F0120BD00	40 - 50	12	M12 x 1,25	Right	22,22	32	22	17,5	16	12	66	50	17	22	6,5	15,4	19	13°	1.900	15
SN61F0120BS00	40 - 50	12	M12 x 1,25	Left	22,22	32	22	17,5	16	12	66	50	17	22	6,5	15,4	19	13°	1.900	15
SN61F0140AD00	-	14	M14	Right	25,4	36	25	20	19	13,5	75	57	19	25	8	16,8	22	15°	3.600	10
SN61F0140AS00	-	14	M14	Left	25,4	36	25	20	19	13,5	75	57	19	25	8	16,8	22	15°	3.600	10
SN61F0160AD00	-	16	M16	Right	28,57	42	27	22	21	15	85	64	23	28	8	19,3	22	15°	4.800	10
SN61F0160AS00	-	16	M16	Left	28,57	42	27	22	21	15	85	64	23	28	8	19,3	22	15°	4.800	10
SN61F0160BD00	50 - 63	16	M16 x 1,5	Right	28,57	42	27	22	21	15	85	64	23	28	8	19,3	22	15°	4.800	10
SN61F0160BS00	50 - 63	16	M16 x 1,5	Left	28,57	42	27	22	21	15	85	64	23	28	8	19,3	22	15°	4.800	10
SN61F0200AD00	-	20	M20	Right	34,92	50	34	27,5	25	18	102	77	27	33	10	24,3	30	14°	5.200	10
SN61F0200AS00	-	20	M20	Left	34,92	50	34	27,5	25	18	102	77	27	33	10	24,3	30	14°	5.200	10
SN61F0200BD00	80 - 100	20	M20 x 1,5	Right	34,92	50	34	27,5	25	18	102	77	27	33	10	24,3	30	14°	5.200	10
SN61F0200BS00	80 - 100	20	M20 x 1,5	Left	34,92	50	34	27,5	25	18	102	77	27	33	10	24,3	30	14°	5.200	10

STANDARD
ISO12240-4/K

MATERIAL - SURFACE TREATMENT
Body: AISI304 (Stainless steel)
Sphere: AISI420 (Stainless steel)
Bushing: Self-lubricating sintered bronze

COUPLING
Self-lubricating Stainless Steel-Bronze

USE
Precision mechanics, exposure to oxidizing/corrosive atmosphere.

NOTES
* 1 DaN (decanewton) = 1.02 Kgf (kilogram-force).

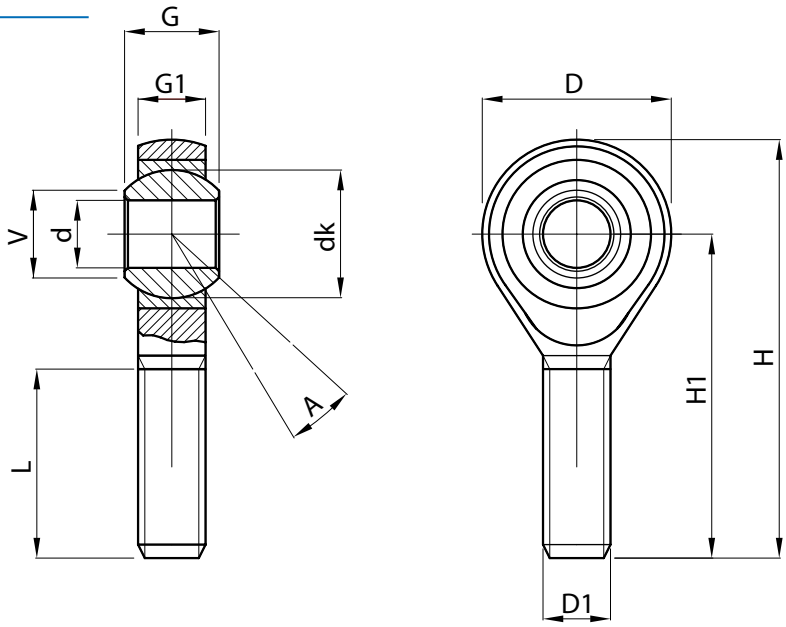

Code	d (H7)	D1 (6g)	Direction thread	dk	D	G	G1	H	H1	L	V	A	Radial static load (DaN) *	Package (pcs)
SN61M0050AD00	5	M5	Right	11,11	18	8	6	42	33	19	7,7	13°	300	30
SN61M0050AS00	5	M5	Left	11,11	18	8	6	42	33	19	7,7	13°	300	30
SN61M0060AD00	6	M6	Right	12,7	20	9	6,75	46	36	21	8,9	13°	400	50
SN61M0060AS00	6	M6	Left	12,7	20	9	6,75	46	36	21	8,9	13°	400	50
SN61M0080AD00	8	M8	Right	15,87	24	12	9	54	42	25	10,4	14°	800	40
SN61M0080AS00	8	M8	Left	15,87	24	12	9	54	42	25	10,4	14°	800	40
SN61M0100AD00	10	M10	Right	19,05	28	14	10,5	62	48	28	12,9	13°	1.300	30
SN61M0100AS00	10	M10	Left	19,05	28	14	10,5	62	48	28	12,9	13°	1.300	30
SN61M0120AD00	12	M12	Right	22,22	32	16	12	70	54	32	15,4	13°	1.700	15
SN61M0120AS00	12	M12	Left	22,22	32	16	12	70	54	32	15,4	13°	1.700	15
SN61M0140AD00	14	M14	Right	25,4	36	19	13,5	78	60	36	16,8	15°	3.600	10
SN61M0140AS00	14	M14	Left	25,4	36	19	13,5	78	60	36	16,8	15°	3.600	10
SN61M0160AD00	16	M16	Right	28,57	42	21	15	87	66	37	19,3	15°	4.800	10
SN61M0160AS00	16	M16	Left	28,57	42	21	15	87	66	37	19,3	15°	4.800	10
SN61M0200AD00	20	M20	Right	34,92	50	25	18	103	78	45	24,3	14°	5.200	10
SN61M0200AS00	20	M20	Left	34,92	50	25	18	103	78	45	24,3	14°	5.200	10
SN61M0200BD00	20	M20 x 1,5	Right	34,92	50	25	18	103	78	45	24,3	14°	5.200	10
SN61M0200BS00	20	M20 x 1,5	Left	34,92	50	25	18	103	78	45	24,3	14°	5.200	10

STANDARD
ISO12240-1/K

MATERIAL - SURFACE TREATMENT
Sphere: 100Cr6 (Steel)
Bushing: Self-lubricating sintered steel

COUPLING
Self-lubricating Steel-Steel

USE
Precision mechanics.

NOTES
* 1 DaN (decanewton) = 1.02 Kgf (kilogram-force).

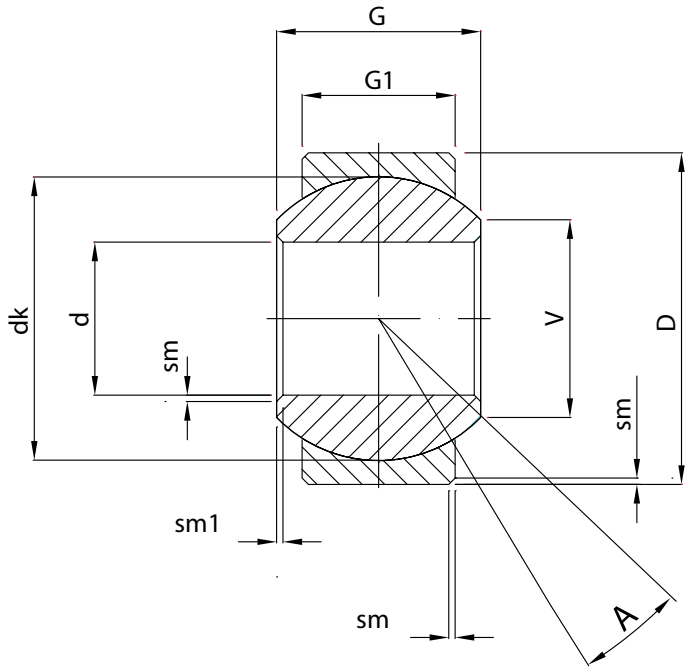

Code	d (H7)	dk	D	G	G1	sm	sm1	V	A	Radial static load (DaN) *	Axial static load (DaN) *	Package (pcs)
SN5S000600000	6	12,7	16	9	6,75	0,3	0,3	8,9	13°	1.700	220	30
SN5S000800000	8	15,87	19	12	9	0,3	0,3	10,4	14°	2.800	370	30
SN5S001000000	10	19,05	22	14	10,5	0,3	0,3	12,9	13°	4.000	520	50
SN5S001200000	12	22,22	26	16	12	0,3	0,3	15,4	13°	5.300	700	40
SN5S001600000	16	28,57	32	21	15	0,3	0,3	19,3	15°	8.500	1.100	30
SN5S002000000	20	34,92	40	20	18	0,3	0,6	24,3	14°	12.500	1.600	30
SN5S003000000	30	50,8	55	30	25	0,3	0,6	34,8	17°	25.400	3.300	15
SN5S003500000	35	57,15	62	43	28	0,6	1	37,7	19°	32.000	4.150	4

STANDARD
ISO12240-1/K

MATERIAL - SURFACE TREATMENT
Sphere: 100Cr6 (Steel)
Bushing: C45 metallic fabric internal PTFE

COUPLING
Steel-Metallic fabric with PTFE

USE
Precision mechanics.

NOTES
* 1 DaN (decanewton) = 1.02 Kgf (kilogram-force).

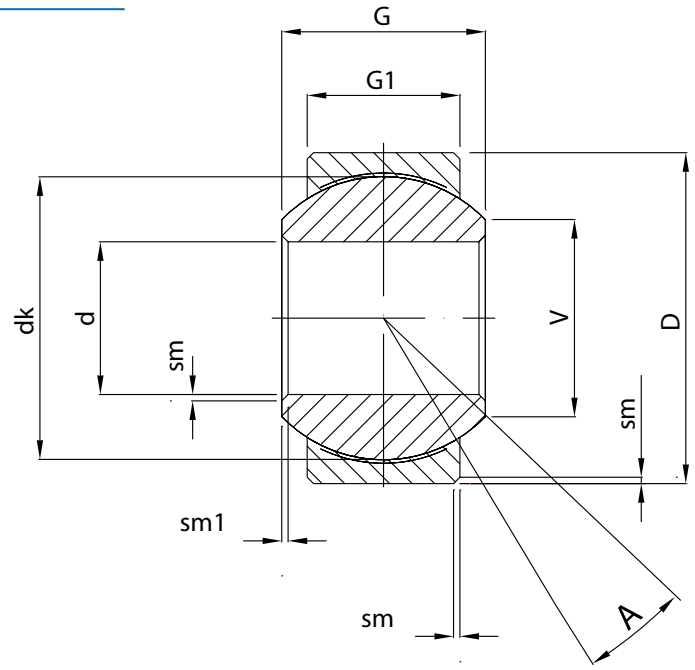

Code	d (H7)	dk	D	G	G1	sm	sm1	V	A	Radial static load (DaN) *	Axial static load (DaN) *	Package (pcs)
SN5S200600000	6	12,7	16	9	6,75	0,3	0,3	8,9	13°	1.700	220	30
SN5S200800000	8	15,87	19	12	9	0,3	0,3	10,4	14°	2.800	370	30
SN5S201000000	10	19,05	22	14	10,5	0,3	0,3	12,9	13°	4.000	520	50
SN5S201200000	12	22,22	26	16	12	0,3	0,3	15,4	13°	5.300	700	40
SN5S201400000	14	25,4	28	19	13,5	0,3	0,3	16,8	15°	8.600	880	30
SN5S201600000	16	28,57	32	21	15	0,3	0,3	19,3	15°	8.500	1.100	30
SN5S201800000	18	31,75	35	23	16,5	0,3	0,3	21,8	15°	13.100	1.400	30
SN5S202000000	20	34,92	40	25	18	0,3	0,6	24,3	14°	12.500	1.600	30
SN5S202200000	22	38,1	42	26	20	0,3	0,6	25,8	15°	19.100	2.100	15
SN5S202500000	25	42,85	47	31	22	0,3	0,6	29,5	15°	23.600	2.700	15
SN5S203000000	30	50,8	55	37	25	0,3	0,6	34,8	17°	25.400	3.300	10
SN5S203500000	35	57,15	62	43	28	0,6	1	37,7	19°	32.000	4.150	4
SN5S204000000	40	66,6	75	49	33	0,6	1	44,2	16°	48.000	4.800	4
SN5S205000000	50	82,5	90	60	45	0,6	1	55,8	14°	80.000	7.900	4

I-TM-PTFE BALL JOINT
stainless steel

STANDARD
ISO12240-1/K

MATERIAL - SURFACE TREATMENT
Sphere: AISI420 (Stainless steel)
Bushing: AISI304 metallic fabric internal PTFE

COUPLING
Stainless Steel-Metallic fabric with PTFE

USE
Precision mechanics, exposure to oxidizing/corrosive atmosphere.

NOTES
* 1 DaN (decanewton) = 1.02 Kgf (kilogram-force).

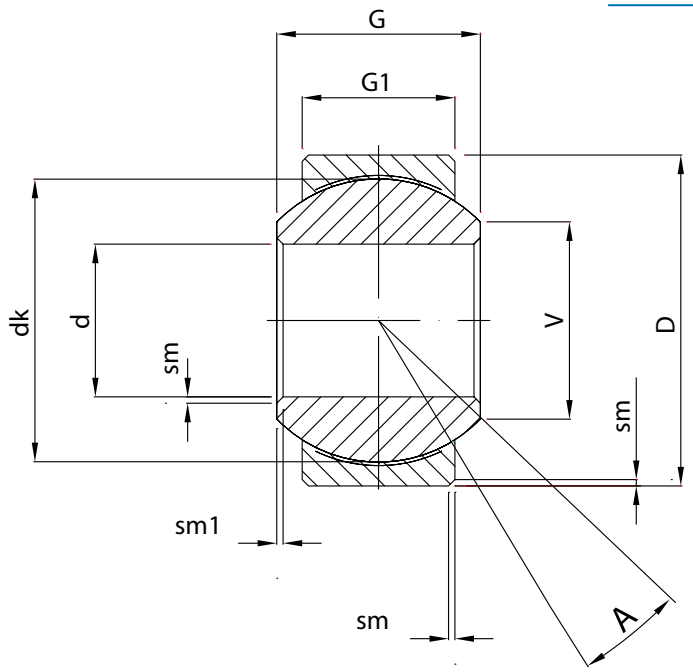

Code	d (H7)	dk	D	G	G1	sm	sm1	V	A	Radial static load (DaN) *	Axial static load (DaN) *	Package (pcs)
SN6S200600000	6	12,7	16	9	6,75	0,3	0,3	8,9	13°	1.700	220	30
SN6S200800000	8	15,87	19	12	9	0,3	0,3	10,4	14°	2.800	370	30
SN6S201000000	10	19,05	22	14	10,5	0,3	0,3	12,9	13°	4.000	520	50
SN6S201200000	12	22,22	26	16	12	0,3	0,3	15,4	13°	5.300	700	40
SN6S201400000	14	25,4	28	19	13,5	0,3	0,3	16,8	15°	8.600	880	30
SN6S201600000	16	28,57	32	21	15	0,3	0,3	19,3	15°	8.500	1.100	30
SN6S201800000	18	31,75	35	23	16,5	0,3	0,3	21,8	15°	13.100	1.400	30
SN6S202000000	20	34,92	40	25	18	0,3	0,6	24,3	14°	12.500	1.600	30
SN6S202200000	22	38,1	42	28	20	0,3	0,6	25,8	15°	19.100	2.100	15
SN6S202500000	25	42,85	47	31	22	0,3	0,6	29,5	15°	23.600	2.700	15
SN6S203000000	30	50,8	55	37	25	0,3	0,6	34,8	17°	25.400	3.300	10
SN6S203500000	35	57,15	62	43	28	0,6	1	37,7	19°	32.000	4.150	4

STANDARD
DIN 71802/C

MATERIAL - SURFACE TREATMENT

Male body:	AC (Steel) tensile strength 60 DaN/mm with tempered sphere >52HRC white galvanized
Female body:	11SMnPb30 (Steel) tensile strength 50 DaN/mm with tempered sphere >52HRC white galvanized
Internal spring:	C98 (Steel) white galvanized

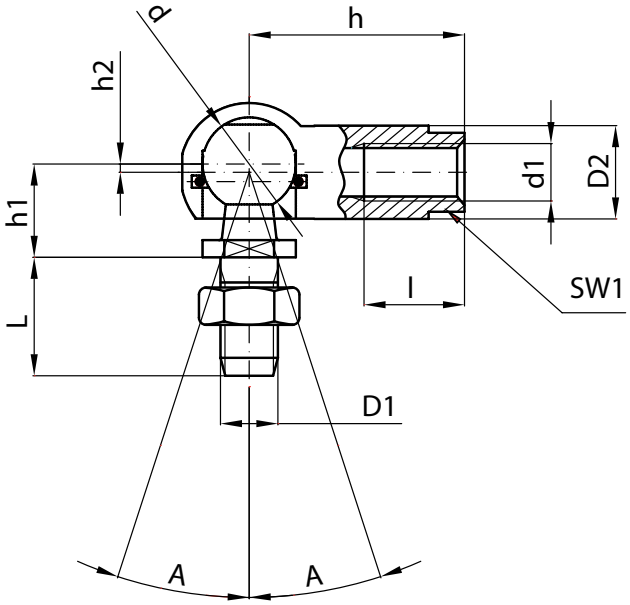

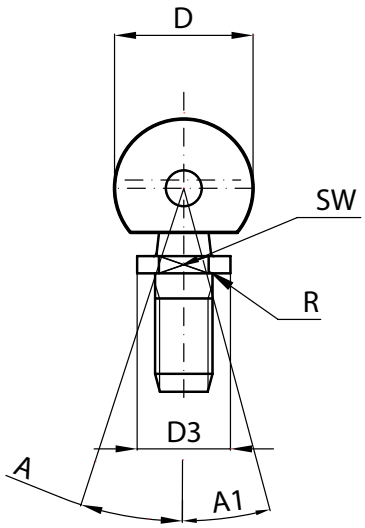

Code	d	d1 (6H)	D1 (6g)	Direction thread	D	D2	D3 (h14)	h	h1	h2	l (min)	L	R (max)	SW (h14)	SW1 (h14)	A (min)	A1	Package (pcs)
SN5A00052AD05	8	M5	M5	Right	12,8	8	8	22	9	0,65	10,2	10,2	0,3	7	7	18°	10°	100
SN5A00052AS05	8	M5	M5	Left	12,8	8	8	22	9	0,65	10,2	10,2	0,3	7	7	18°	10°	100
SN5A00062AD05	10	M6	M6	Right	14,8	10	10	25	11	0,7	11,5	12,5	0,3	8	8	18°	15°	100
SN5A00062AS05	10	M6	M6	Left	14,8	10	10	25	11	0,7	11,5	12,5	0,3	8	8	18°	15°	100
SN5A00083AD05	13	M8	M8	Right	19,3	13	13	30	13	1,15	14	16,5	0,5	11	11	18°	15°	100
SN5A00083AS05	13	M8	M8	Left	19,3	13	13	30	13	1,15	14	16,5	0,5	11	11	18°	15°	100
SN5A00103AD05	16	M10	M10	Right	24	16	16	35	16	1,15	15,5	20	0,5	13	13	18°	15°	100
SN5A00103AS05	16	M10	M10	Left	24	16	16	35	16	1,15	15,5	20	0,5	13	13	18°	15°	100
SN5A00123AD05	16	M12	M12	Right	24	16	16	35	16	1,15	15,5	20	0,5	13	-	18°	15°	100
SN5A00123AS05	16	M12	M12	Left	24	16	16	35	16	1,15	15,5	20	0,5	13	-	18°	15°	100
SN5A00144AD05	19	M14	M14	Right	30	22	19	45	20	0,5	21,5	28	0,8	16	-	18°	15°	25
SN5A00144AS05	19	M14	M14	Left	30	22	19	45	20	0,5	21,5	28	0,8	16	-	18°	15°	25
SN5A00144BD05	19	M14 x 1,5	M14 x 1,5	Right	30	22	19	45	20	0,5	21,5	28	0,8	16	-	18°	15°	25
SN5A00144BS05	19	M14 x 1,5	M14 x 1,5	Left	30	22	19	45	20	0,5	21,5	28	0,8	16	-	18°	15°	25
SN5A00164AD05	19	M16	M16	Right	30	22	19	45	20	0,5	21,5	28	0,8	16	-	18°	15°	25
SN5A00164AS05	19	M16	M16	Left	30	22	19	45	20	0,5	21,5	28	0,8	16	-	18°	15°	25

I-A-A ANGLE JOINT INTERNAL SPRING
stainless steel

STANDARD
DIN 71802/C

MATERIAL - SURFACE TREATMENT
Male body: AISI303 (Stainless steel)
Female body: AISI303 (Stainless steel)
Internal spring: AISI302 (Stainless steel)

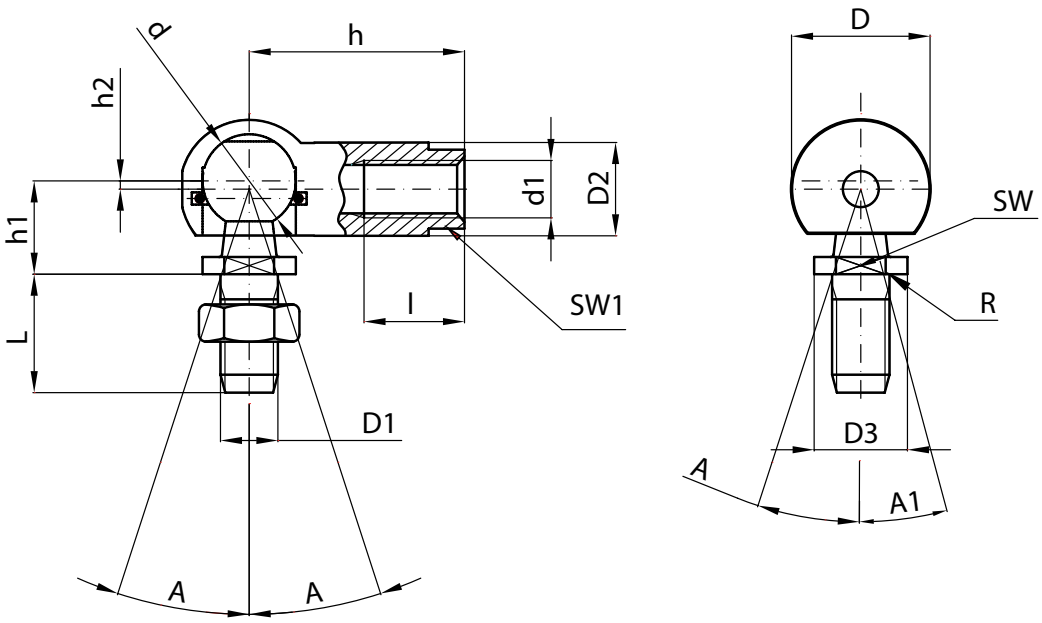

Code	d	d1 (6H)	D1 (6g)	Direction thread	D	D2	D3 (h14)	h	h1	h2	l (min)	L	R (max)	SW (h14)	SW1 (h14)	A (min)	A1	Package (pcs)
SN6A00052AD00	8	M5	M5	Right	12,8	8	8	22	9	0,65	10,2	10,2	0,3	7	7	18°	10°	100
SN6A00052AS00	8	M5	M5	Left	12,8	8	8	22	9	0,65	10,2	10,2	0,3	7	7	18°	10°	100
SN6A00062AD00	10	M6	M6	Right	14,8	10	10	25	11	0,7	11,5	12,5	0,3	8	8	18°	15°	100
SN6A00062AS00	10	M6	M6	Left	14,8	10	10	25	11	0,7	11,5	12,5	0,3	8	8	18°	15°	100
SN6A00083AD00	13	M8	M8	Right	19,3	13	13	30	13	1,15	14	16,5	0,5	11	11	18°	15°	100
SN6A00083AS00	13	M8	M8	Left	19,3	13	13	30	13	1,15	14	16,5	0,5	11	11	18°	15°	100
SN6A00103AD00	16	M10	M10	Right	24	16	16	35	16	1,15	15,5	20	0,5	13	13	18°	15°	100
SN6A00103AS00	16	M10	M10	Left	24	16	16	35	16	1,15	15,5	20	0,5	13	13	18°	15°	100
SN6A00123AD00	16	M12	M12	Right	24	16	16	35	16	1,15	15,5	20	0,5	13	-	18°	15°	100
SN6A00123AS00	16	M12	M12	Left	24	16	16	35	16	1,15	15,5	20	0,5	13	-	18°	15°	100
SN6A00144AD00	19	M14	M14	Right	30	22	19	45	20	0,5	21,5	28	0,8	16	-	18°	15°	25
SN6A00144AS00	19	M14	M14	Left	30	22	19	45	20	0,5	21,5	28	0,8	16	-	18°	15°	25
SN6A00144BD00	19	M14 x 1,5	M14 x 1,5	Right	30	22	19	45	20	0,5	21,5	28	0,8	16	-	18°	15°	25
SN6A00144BS00	19	M14 x 1,5	M14 x 1,5	Left	30	22	19	45	20	0,5	21,5	28	0,8	16	-	18°	15°	25
SN6A00164AD00	19	M16	M16	Right	30	22	19	45	20	0,5	21,5	28	0,8	16	-	18°	15°	25
SN6A00164AS00	19	M16	M16	Left	30	22	19	45	20	0,5	21,5	28	0,8	16	-	18°	15°	25

STANDARD
DIN 71802/CS

MATERIAL - SURFACE TREATMENT

Male body: AC (Steel) tensile strength 60 DaN/mm with tempered sphere >52HRC white galvanized
Female body: 11SMnPb30 (Steel) tensile strength 50 DaN/mm with tempered sphere >52HRC white galvanized
Internal spring: C98 (Steel) white galvanized
External spring: C98 (Steel) white galvanized

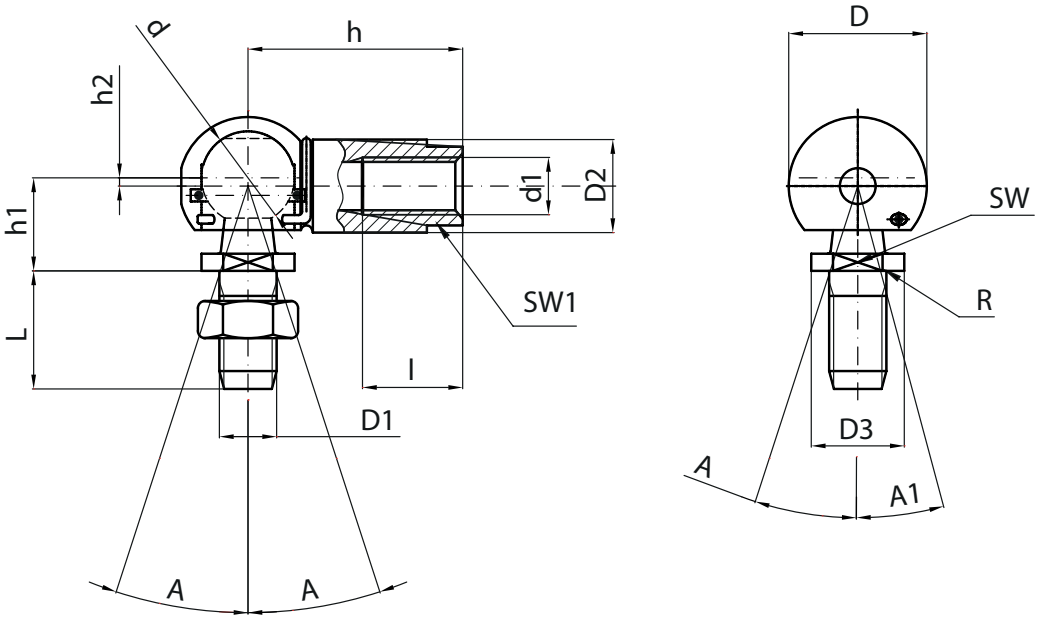

Code	d	d1 (6H)	D1 (6g)	Direction thread	D	D2	D3 (h14)	h	h1	h2	l (min)	L	R (max)	SW (h14)	SW1 (h14)	A (min)	A1	Package (pcs)
SN5A10052AD05	8	M5	M5	Right	12,8	8	8	22	9	0,65	10,2	10,2	0,3	7	7	18°	10°	100
SN5A10052AS05	8	M5	M5	Left	12,8	8	8	22	9	0,65	10,2	10,2	0,3	7	7	18°	10°	100
SN5A10062AD05	10	M6	M6	Right	14,8	10	10	25	11	0,7	11,5	12,5	0,3	8	8	18°	15°	100
SN5A10062AS05	10	M6	M6	Left	14,8	10	10	25	11	0,7	11,5	12,5	0,3	8	8	18°	15°	100
SN5A10083AD05	13	M8	M8	Right	19,3	13	13	30	13	1,15	14	16,5	0,5	11	11	18°	15°	100
SN5A10083AS05	13	M8	M8	Left	19,3	13	13	30	13	1,15	14	16,5	0,5	11	11	18°	15°	100
SN5A10103AD05	16	M10	M10	Right	24	16	16	35	16	1,15	15,5	20	0,5	13	13	18°	15°	100
SN5A10103AS05	16	M10	M10	Left	24	16	16	35	16	1,15	15,5	20	0,5	13	13	18°	15°	100
SN5A10123AD05	16	M12	M12	Right	24	16	16	35	16	1,15	15,5	20	0,5	13	-	18°	15°	100
SN5A10123AS05	16	M12	M12	Left	24	16	16	35	16	1,15	15,5	20	0,5	13	-	18°	15°	100
SN5A10144AD05	19	M14	M14	Right	30	22	19	45	20	0,5	21,5	28	0,8	16	-	18°	15°	25
SN5A10144AS05	19	M14	M14	Left	30	22	19	45	20	0,5	21,5	28	0,8	16	-	18°	15°	25
SN5A10144BD05	19	M14 x 1,5	M14 x 1,5	Right	30	22	19	45	20	0,5	21,5	28	0,8	16	-	18°	15°	25
SN5A10144BS05	19	M14 x 1,5	M14 x 1,5	Left	30	22	19	45	20	0,5	21,5	28	0,8	16	-	18°	15°	25
SN5A10164AD05	19	M16	M16	Right	30	22	19	45	20	0,5	21,5	28	0,8	16	-	18°	15°	25
SN5A10164AS05	19	M16	M16	Left	30	22	19	45	20	0,5	21,5	28	0,8	16	-	18°	15°	25

I-A-A ANGLE JOINT INTERNAL EXTERNAL SPRING

stainless steel

STANDARD
DIN 71802/CS

MATERIAL - SURFACE TREATMENT

Male body:	AISI303 (Stainless steel)
Female body:	AISI303 (Stainless steel)
Internal spring:	AISI302 (Stainless steel)
External spring:	AISI302 (Stainless steel)

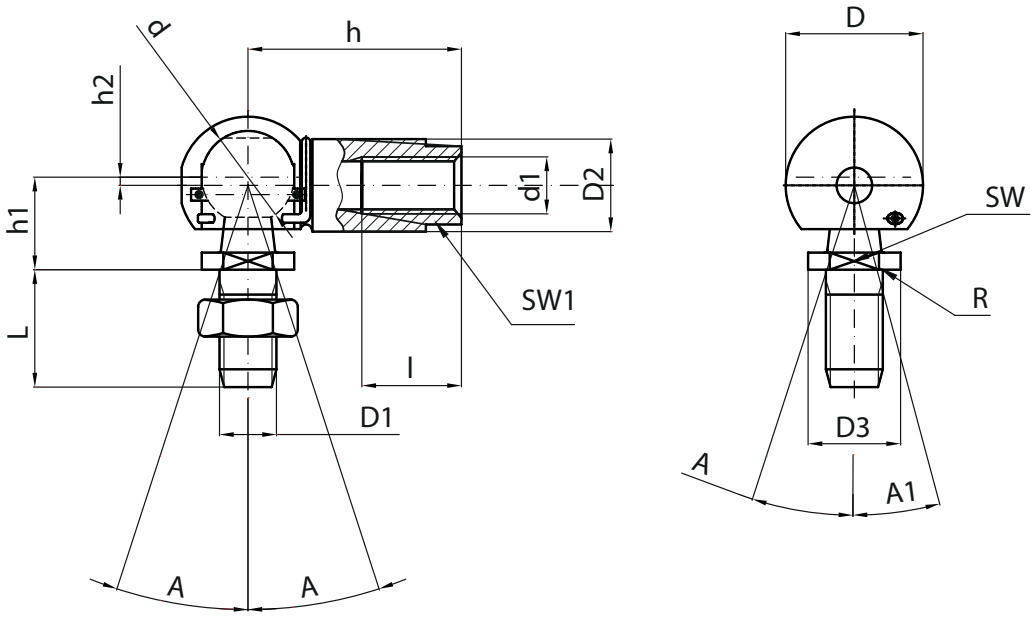

Code	d	d1 (6H)	D1 (6g)	Direction thread	D	D2	D3 (h14)	h	h1	h2	l (min)	L	R (max)	SW (h14)	SW1 (h14)	A (min)	A1	Package (pcs)
SN6A10052AD00	8	M5	M5	Right	12,8	8	8	22	9	0,65	10,2	10,2	0,3	7	7	18°	10°	100
SN6A10052AS00	8	M5	M5	Left	12,8	8	8	22	9	0,65	10,2	10,2	0,3	7	7	18°	10°	100
SN6A10062AD00	10	M6	M6	Right	14,8	10	10	25	11	0,7	11,5	12,5	0,3	8	8	18°	15°	100
SN6A10062AS00	10	M6	M6	Left	14,8	10	10	25	11	0,7	11,5	12,5	0,3	8	8	18°	15°	100
SN6A10083AD00	13	M8	M8	Right	19,3	13	13	30	13	1,15	14	16,5	0,5	11	11	18°	15°	100
SN6A10083AS00	13	M8	M8	Left	19,3	13	13	30	13	1,15	14	16,5	0,5	11	11	18°	15°	100
SN6A10103AD00	16	M10	M10	Right	24	16	16	35	16	1,15	15,5	20	0,5	13	13	18°	15°	100
SN6A10103AS00	16	M10	M10	Left	24	16	16	35	16	1,15	15,5	20	0,5	13	13	18°	15°	100
SN6A10123AD00	16	M12	M12	Right	24	16	16	35	16	1,15	15,5	20	0,5	13	-	18°	15°	100
SN6A10123AS00	16	M12	M12	Left	24	16	16	35	16	1,15	15,5	20	0,5	13	-	18°	15°	100
SN6A10144AD00	19	M14	M14	Right	30	22	19	45	20	0,5	21,5	28	0,8	16	-	18°	15°	25
SN6A10144AS00	19	M14	M14	Left	30	22	19	45	20	0,5	21,5	28	0,8	16	-	18°	15°	25
SN6A10144BD00	19	M14 x 1,5	M14 x 1,5	Right	30	22	19	45	20	0,5	21,5	28	0,8	16	-	18°	15°	25
SN6A10144BS00	19	M14 x 1,5	M14 x 1,5	Left	30	22	19	45	20	0,5	21,5	28	0,8	16	-	18°	15°	25
SN6A10164AD00	19	M16	M16	Right	30	22	19	45	20	0,5	21,5	28	0,8	16	-	18°	15°	25
SN6A10164AS00	19	M16	M16	Left	30	22	19	45	20	0,5	21,5	28	0,8	16	-	18°	15°	25

MATERIAL
11SMnPb30 (Steel)

SURFACE TREATMENT
White galvanized

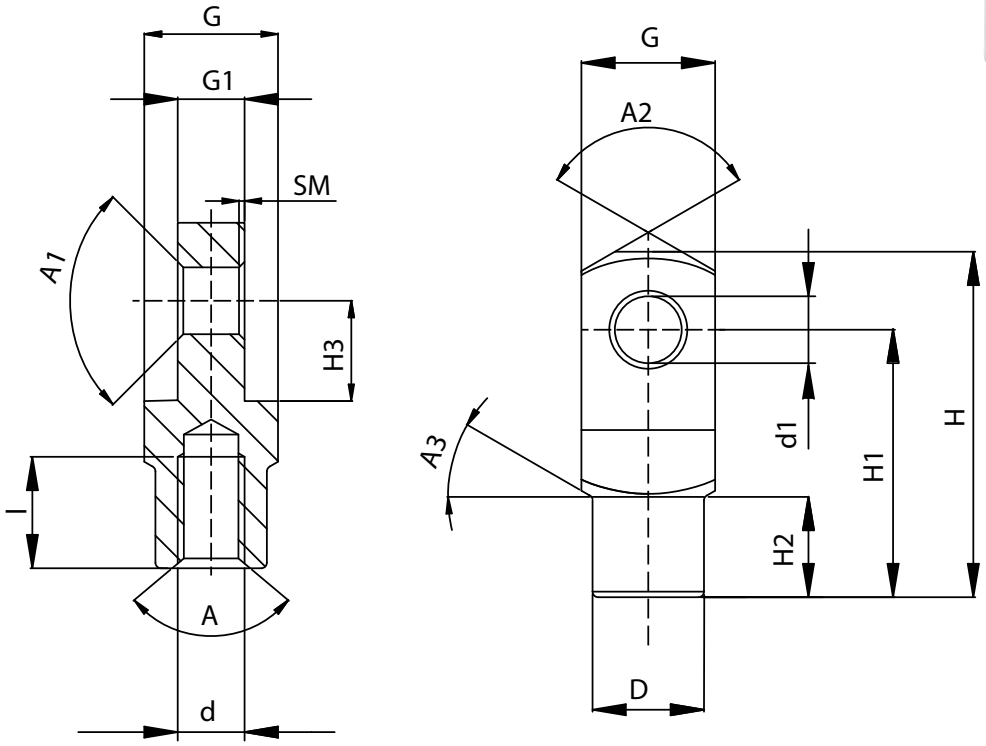

Code	d1 (H9)	d	Direction thread	D	G (h11)	G1	H	H1	H2	H3	I	SM	A	A1	A2	A3	Package (pcs)
FO5T00040AD05	4	M4	Right	8	8	4	21	16	6	6	6	0,5	100°	90°	120°	30°	100
FO5T00040AS05	4	M4	Left	8	8	4	21	16	6	6	6	0,5	100°	90°	120°	30°	100
FO5T00050AD05	5	M5	Right	9	10	5	26	20	7,5	7,5	8	0,5	100°	90°	120°	30°	100
FO5T00050AS05	5	M5	Left	9	10	5	26	20	7,5	7,5	8	0,5	100°	90°	120°	30°	100
FO5T00060AD05	6	M6	Right	10	12	6	31	24	9	9	11	0,5	100°	90°	120°	30°	100
FO5T00060AS05	6	M6	Left	10	12	6	31	24	9	9	11	0,5	100°	90°	120°	30°	100
FO5T00080AD05	8	M8	Right	14	16	8	42	32	12	12	14	0,5	100°	90°	120°	30°	100
FO5T00080AS05	8	M8	Left	14	16	8	42	32	12	12	14	0,5	100°	90°	120°	30°	100
FO5T00100AD05	10	M10	Right	18	20	10	52	40	15	15	18	0,5	100°	90°	120°	30°	100
FO5T00100AS05	10	M10	Left	18	20	10	52	40	15	15	18	0,5	100°	90°	120°	30°	100
FO5T00100BD05	10	M10 x 1,25	Right	18	20	10	52	40	15	15	18	0,5	100°	90°	120°	30°	100
FO5T00100BS05	10	M10 x 1,25	Left	18	20	10	52	40	15	15	18	0,5	100°	90°	120°	30°	100
FO5T00120AD05	12	M12	Right	20	24	12	62	48	18	18	22	0,5	100°	90°	120°	30°	50
FO5T00120AS05	12	M12	Left	20	24	12	62	48	18	18	22	0,5	100°	90°	120°	30°	50
FO5T00120BD05	12	M12 x 1,25	Right	20	24	12	62	48	18	18	22	0,5	100°	90°	120°	30°	50
FO5T00120BS05	12	M12 x 1,25	Left	20	24	12	62	48	18	18	22	0,5	100°	90°	120°	30°	50
FO5T00140AD05	14	M14	Right	24	27	14	72	56	22,5	21	25	1	100°	90°	120°	30°	50
FO5T00140AS05	14	M14	Left	24	27	14	72	56	22,5	21	25	1	100°	90°	120°	30°	50
FO5T00160AD05	16	M16	Right	26	32	16	83	64	24	24	30	1	100°	90°	120°	30°	20
FO5T00160AS05	16	M16	Left	26	32	16	83	64	24	24	30	1	100°	90°	120°	30°	20
FO5T00160BD05	16	M16 x 1,5	Right	26	32	16	83	64	24	24	30	1	100°	90°	120°	30°	20
FO5T00160BS05	16	M16 x 1,5	Left	26	32	16	83	64	24	24	30	1	100°	90°	120°	30°	20
FO5T00200AD05	20	M20	Right	34	40	20	105	80	30	30	38	1	100°	90°	120°	30°	10
FO5T00200AS05	20	M20	Left	34	40	20	105	80	30	30	38	1	100°	90°	120°	30°	10
FO5T00200BD05	20	M20 x 1,5	Right	34	40	20	105	80	30	30	38	1	100°	90°	120°	30°	10
FO5T00200BS05	20	M20 x 1,5	Left	34	40	20	105	80	30	30	38	1	100°	90°	120°	30°	10

FEMALE FORK
steel

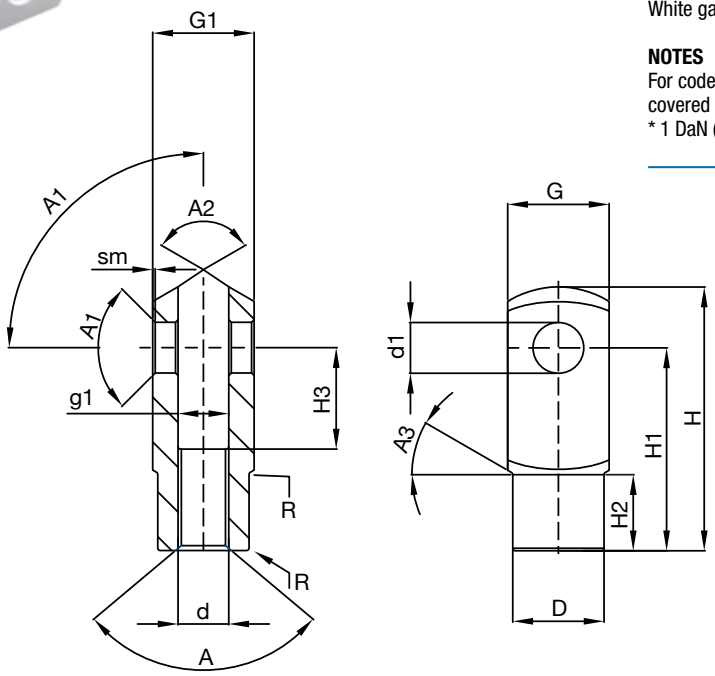

STANDARD
DIN 71752

MATERIAL
11SMnPb30 (Steel)

SURFACE TREATMENT
White galvanized

NOTES
For codes with d1>18, the indicated dimensions are not covered by DIN 71752.
* 1 DaN (decanewton) = 1.02 Kgf (kilogram-force)

Code	Bore	d1 (H9)	d (H6)	Direction thread	g1	G (h11)	G1	D	H	H1	H2	H3	R	sm	A	A1	A2	A3	Radial static load (DaN) *	Package (pcs)
FO5D00040AD05	8 - 10	4	M4	Right	4	8	8	8	21	16	6	8	0,5	0,5	100°	90°	120°	30°	320	100
FO5D00040AS05	8 - 10	4	M4	Left	4	8	8	8	21	16	6	8	0,5	0,5	100°	90°	120°	30°	320	100
FO5D00041AD05	-	4	M4	Right	4	8	8	8	29	24	6	16	0,5	0,5	100°	90°	120°	30°	320	100
FO5D00041AS05	-	4	M4	Left	4	8	8	8	29	24	6	16	0,5	0,5	100°	90°	120°	30°	320	100
FO5D00051AD05	-	5	M5	Right	5	10	10	9	26	20	7,5	10	0,5	0,5	100°	90°	120°	30°	500	100
FO5D00051AS05	-	5	M5	Left	5	10	10	9	26	20	7,5	10	0,5	0,5	100°	90°	120°	30°	500	100
FO5D00052AD05	-	5	M5	Right	5	10	10	9	36	30	7,5	20	0,5	0,5	100°	90°	120°	30°	500	100
FO5D00052AS05	-	5	M5	Left	5	10	10	9	36	30	7,5	20	0,5	0,5	100°	90°	120°	30°	500	100
FO5D00061AD05	12 - 16	6	M6	Right	6	12	12	10	31	24	9	12	0,5	0,5	100°	90°	120°	30°	720	100
FO5D00061AS05	12 - 16	6	M6	Left	6	12	12	10	31	24	9	12	0,5	0,5	100°	90°	120°	30°	720	100
FO5D00062AD05	-	6	M6	Right	6	12	12	10	43	36	9	24	0,5	0,5	100°	90°	120°	30°	720	100
FO5D00062AS05	-	6	M6	Left	6	12	12	10	43	36	9	24	0,5	0,5	100°	90°	120°	30°	720	100
FO5D00081AD05	20	8	M8	Right	8	16	16	14	42	32	12	16	0,5	0,5	100°	90°	120°	30°	1.280	100
FO5D00081AS05	20	8	M8	Left	8	16	16	14	42	32	12	16	0,5	0,5	100°	90°	120°	30°	1.280	100
FO5D00083AD05	-	8	M8	Right	8	16	16	14	58	48	12	32	0,5	0,5	100°	90°	120°	30°	1.280	100
FO5D00083AS05	-	8	M8	Left	8	16	16	14	58	48	12	32	0,5	0,5	100°	90°	120°	30°	1.280	100
FO5D00102AD05	-	10	M10	Right	10	20	20	18	52	40	15	20	0,5	0,5	100°	90°	120°	30°	2.000	100
FO5D00102AS05	-	10	M10	Left	10	20	20	18	52	40	15	20	0,5	0,5	100°	90°	120°	30°	2.000	100
FO5D00102BD05	25 - 32	10	M10 x 1,25	Right	10	20	20	18	52	40	15	20	0,5	0,5	100°	90°	120°	30°	2.000	100
FO5D00102BS05	25 - 32	10	M10 x 1,25	Left	10	20	20	18	52	40	15	20	0,5	0,5	100°	90°	120°	30°	2.000	100
FO5D00104AD05	-	10	M10	Right	10	20	20	18	72	60	15	40	0,5	0,5	100°	90°	120°	30°	2.000	50
FO5D00104AS05	-	10	M10	Left	10	20	20	18	72	60	15	40	0,5	0,5	100°	90°	120°	30°	2.000	50
FO5D00122AD05	-	12	M12	Right	12	24	24	20	62	48	18	24	0,5	0,5	100°	90°	120°	30°	2.880	50
FO5D00122AS05	-	12	M12	Left	12	24	24	20	62	48	18	24	0,5	0,5	100°	90°	120°	30°	2.880	50
FO5D00122BD05	40	12	M12 x 1,25	Right	12	24	24	20	62	48	18	24	0,5	0,5	100°	90°	120°	30°	2.880	50
FO5D00122BS05	40	12	M12 x 1,25	Left	12	24	24	20	62	48	18	24	0,5	0,5	100°	90°	120°	30°	2.880	50
FO5D00124AD05	-	12	M12	Right	12	24	24	20	86	72	18	48	0,5	0,5	100°	90°	120°	30°	2.880	50
FO5D00124AS05	-	12	M12	Left	12	24	24	20	86	72	18	48	0,5	0,5	100°	90°	120°	30°	2.880	50
FO5D00142AD05	-	14	M14	Right	14	27	27	24	72	56	22,5	28	1	0,5	100°	90°	120°	30°	3.380	50
FO5D00142AS05	-	14	M14	Left	14	27	27	24	72	56	22,5	28	1	0,5	100°	90°	120°	30°	3.380	50
FO5D00145AD05	-	14	M14	Right	14	27	27	24	101	85	22,5	56	1	0,5	100°	90°	120°	30°	3.380	50
FO5D00145AS05	-	14	M14	Left	14	27	27	24	101	85	22,5	56	1	0,5	100°	90°	120°	30°	3.380	50

STANDARD
DIN 71752

MATERIAL
11SMnPb30 (Steel)

SURFACE TREATMENT
White galvanized

NOTES
For codes with d1>18, the indicated dimensions are not covered by DIN 71752.
* 1 DaN (decanewton) = 1.02 Kgf (kilogram-force)

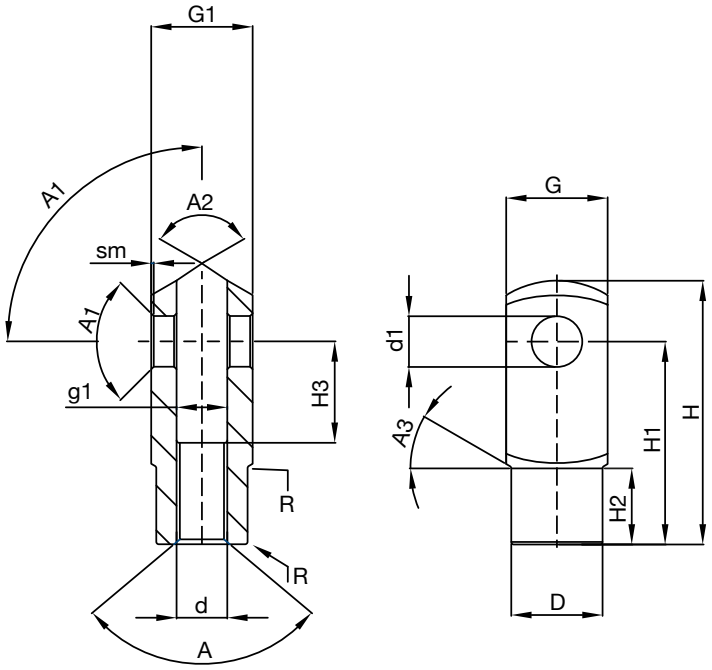

Code	Bore	d1 (H9)	d (H6)	Direction thread	g1	G (h11)	G1	D	H	H1	H2	H3	R	sm	A	A1	A2	A3	Radial static load (DaN) *	Package (pcs)
FO5D00163AD05	-	16	M16	Right	16	32	32	26	83	64	24	32	1	1	100°	90°	120°	30°	5.120	20
FO5D00163AS05	-	16	M16	Left	16	32	32	26	83	64	24	32	1	1	100°	90°	120°	30°	5.120	20
FO5D00163BD05	50 - 63	16	M16 x 1,5	Right	16	32	32	26	83	64	24	32	1	1	100°	90°	120°	30°	5.120	20
FO5D00163BS05	50 - 63	16	M16 x 1,5	Left	16	32	32	26	83	64	24	32	1	1	100°	90°	120°	30°	5.120	20
FO5D00166AD05	-	16	M16	Right	16	32	32	26	115	96	24	64	1	1	100°	90°	120°	30°	5.120	20
FO5D00166AS05	-	16	M16	Left	16	32	32	26	115	96	24	64	1	1	100°	90°	120°	30°	5.120	20
FO5D00204AD05	-	20	M20	Right	20	40	40	34	105	80	30	40	1,5	1	100°	90°	120°	30°	8.000	10
FO5D00204AS05	-	20	M20	Left	20	40	40	34	105	80	30	40	1,5	1	100°	90°	120°	30°	8.000	10
FO5D00204BD05	80 - 100	20	M20 x 1,5	Right	20	40	40	34	105	80	30	40	1,5	1	100°	90°	120°	30°	8.000	10
FO5D00204BS05	80 - 100	20	M20 x 1,5	Left	20	40	40	34	105	80	30	40	1,5	1	100°	90°	120°	30°	8.000	10
FO5D00208AD05	-	20	M20	Right	20	40	40	34	145	120	30	80	1,5	1	100°	90°	120°	30°	8.000	10
FO5D00208AS05	-	20	M20	Left	20	40	40	34	145	120	30	80	1,5	1	100°	90°	120°	30°	8.000	10
FO5D00245AD05	-	25	M24	Right	25	50	50	42	132	100	36	50	1,5	1	100°	90°	120°	30°	12.500	10
FO5D00245AS05	-	25	M24	Left	25	50	50	42	132	100	36	50	1,5	1	100°	90°	120°	30°	12.500	10
FO5D00245BD05	125	25	M24 x 2	Right	25	50	50	42	132	100	36	50	1,5	1	100°	90°	120°	30°	12.500	10
FO5D00245BS05	125	25	M24 x 2	Left	25	50	50	42	132	100	36	50	1,5	1	100°	90°	120°	30°	12.500	10
FO5D00275BD05	125	30	M27 x 2	Right	30	55	55	48	148	110	38	54	2	1	100°	90°	120°	30°	12.500	4
FO5D00275BS05	125	30	M27 x 2	Left	30	55	55	48	148	110	38	54	2	1	100°	90°	120°	30°	12.500	4
FO5D00305AD05	-	30	M30	Right	30	55	55	48	148	110	38	54	2	1	100°	90°	120°	30°	12.500	4
FO5D00305AS05	-	30	M30	Left	30	55	55	48	148	110	38	54	2	1	100°	90°	120°	30°	12.500	4
FO5D00367AD05	-	35	M36	Right	35	70	70	60	188	144	40	72	3	1	100°	90°	120°	30°	24.500	2
FO5D00367AS05	-	35	M36	Left	35	70	70	60	188	144	40	72	3	1	100°	90°	120°	30°	24.500	2
FO5D00367UD05	-	35	M36 x 2	Right	35	70	70	60	188	144	40	72	3	1	100°	90°	120°	30°	24.500	2
FO5D00367US05	-	35	M36 x 2	Left	35	70	70	60	188	144	40	72	3	1	100°	90°	120°	30°	24.500	2
FO5D00428AD05	-	42	M42	Right	42	85	85	70	232	168	63,5	84	5	1	100°	90°	120°	30°	35.500	1
FO5D00428AS05	-	42	M42	Left	42	85	85	70	232	168	63,5	84	5	1	100°	90°	120°	30°	35.500	1
FO5D00428UD05	250	42	M42 x 2	Right	42	85	85	70	232	168	63,5	84	5	1	100°	90°	120°	30°	35.500	1
FO5D00428US05	250	42	M42 x 2	Left	42	85	85	70	232	168	63,5	84	5	1	100°	90°	120°	30°	35.500	1
FO5D00489UD05	320	50	M48 x 2	Right	50	96	96	82	265	192	73	96	5	1	100°	90°	120°	30°	41.000	1
FO5D00489US05	320	50	M48 x 2	Left	50	96	96	82	265	192	73	96	5	1	100°	90°	120°	30°	41.000	1

FEMALE FORK
stainless steel

STANDARD
DIN 71752

MATERIAL
AISI303 (Stainless steel)

NOTES
For codes with d1>18, the indicated dimensions are not covered by DIN 71752.
* 1 DaN (decanewton) = 1.02 Kgf (kilogram-force).

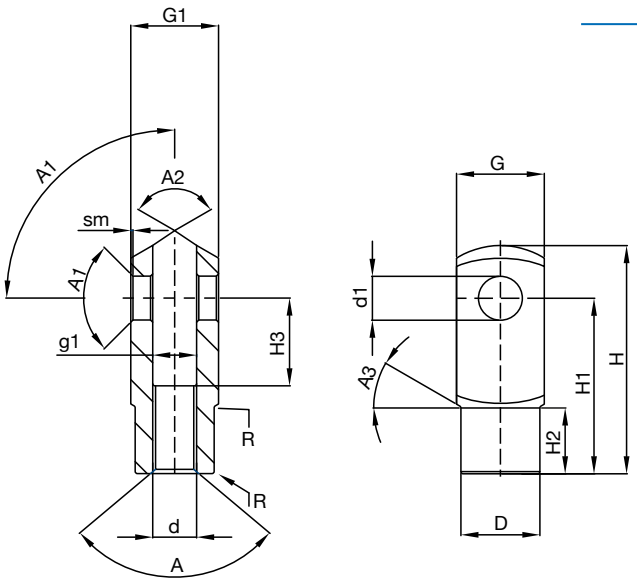

Code	Bore	d1 (H9)	d (H6)	Direction thread	g1	G (h11)	G1	D	H	H1	H2	H3	R	sm	A	A1	A2	A3	Radial static load (DaN) *	Package (pcs)
FO6D00040AD00	8 - 10	4	M4	Right	4	8	8	8	21	16	6	8	0,5	0,5	100°	90°	120°	30°	320	100
FO6D00051AD00	-	5	M5	Right	5	10	10	9	26	20	7,5	10	0,5	0,5	100°	90°	120°	30°	500	100
FO6D00051AS00	-	5	M5	Left	5	10	10	9	26	20	7,5	10	0,5	0,5	100°	90°	120°	30°	500	100
FO6D00052AD00	-	5	M5	Right	5	10	10	9	36	30	7,5	20	0,5	0,5	100°	90°	120°	30°	500	100
FO6D00052AS00	-	5	M5	Left	5	10	10	9	36	30	7,5	20	0,5	0,5	100°	90°	120°	30°	500	100
FO6D00061AD00	12 - 16	6	M6	Right	6	12	12	10	31	24	9	12	0,5	0,5	100°	90°	120°	30°	720	100
FO6D00061AS00	12 - 16	6	M6	Left	6	12	12	10	31	24	9	12	0,5	0,5	100°	90°	120°	30°	720	100
FO6D00062AD00	-	6	M6	Right	6	12	12	10	43	36	9	24	0,5	0,5	100°	90°	120°	30°	720	100
FO6D00062AS00	-	6	M6	Left	6	12	12	10	43	36	9	24	0,5	0,5	100°	90°	120°	30°	720	100
FO6D00081AD00	20	8	M8	Right	8	16	16	14	42	32	12	16	0,5	0,5	100°	90°	120°	30°	1.280	100
FO6D00081AS00	20	8	M8	Left	8	16	16	14	42	32	12	16	0,5	0,5	100°	90°	120°	30°	1.280	100
FO6D00083AD00	-	8	M8	Right	8	16	16	14	58	48	12	32	0,5	0,5	100°	90°	120°	30°	1.280	100
FO6D00083AS00	-	8	M8	Left	8	16	16	14	58	48	12	32	0,5	0,5	100°	90°	120°	30°	1.280	100
FO6D00102AD00	-	10	M10	Right	10	20	20	18	52	40	15	20	0,5	0,5	100°	90°	120°	30°	2.000	100
FO6D00102AS00	-	10	M10	Left	10	20	20	18	52	40	15	20	0,5	0,5	100°	90°	120°	30°	2.000	100
FO6D00102BD00	25 - 32	10	M10 x 1,25	Right	10	20	20	18	52	40	15	20	0,5	0,5	100°	90°	120°	30°	2.000	100
FO6D00104AD00	-	10	M10	Right	10	20	20	18	72	60	15	40	0,5	0,5	100°	90°	120°	30°	2.000	50
FO6D00104AS00	-	10	M10	Left	10	20	20	18	72	60	15	40	0,5	0,5	100°	90°	120°	30°	2.000	50
FO6D00122AD00	-	12	M12	Right	12	24	24	20	62	48	18	24	0,5	0,5	100°	90°	120°	30°	2.880	50
FO6D00122AS00	-	12	M12	Left	12	24	24	20	62	48	18	24	0,5	0,5	100°	90°	120°	30°	2.880	50
FO6D00122BD00	40	12	M12 x 1,25	Right	12	24	24	20	62	48	18	24	0,5	0,5	100°	90°	120°	30°	2.880	50
FO6D00124AD00	-	12	M12	Right	12	24	24	20	86	72	18	48	0,5	0,5	100°	90°	120°	30°	2.880	50
FO6D00124AS00	-	12	M12	Left	12	24	24	20	86	72	18	48	0,5	0,5	100°	90°	120°	30°	2.880	50
FO6D00163AD00	-	16	M16	Right	16	32	32	26	83	64	24	32	1	1	100°	90°	120°	30°	5.120	20
FO6D00163AS00	-	16	M16	Left	16	32	32	26	83	64	24	32	1	1	100°	90°	120°	30°	5.120	20
FO6D00163BD00	50 - 63	16	M16 x 1,5	Right	16	32	32	26	83	64	24	32	1	1	100°	90°	120°	30°	5.120	20
FO6D00166AD00	-	16	M16	Right	16	32	32	26	115	96	24	64	1	1	100°	90°	120°	30°	5.120	20
FO6D00166AS00	-	16	M16	Left	16	32	32	26	115	96	24	64	1	1	100°	90°	120°	30°	5.120	20
FO6D00204AD00	-	20	M20	Right	20	40	40	34	105	80	30	40	1,5	1	100°	90°	120°	30°	8.000	10
FO6D00204AS00	-	20	M20	Left	20	40	40	34	105	80	30	40	1,5	1	100°	90°	120°	30°	8.000	10
FO6D00204BD00	80 - 100	20	M20 x 1,5	Right	20	40	40	34	105	80	30	40	1,5	1	100°	90°	120°	30°	8.000	10
FO6D00305AD00	-	30	M30	Right	30	55	55	48	148	110	38	54	2	1	100°	90°	120°	30°	12.500	4
FO6D00305AS00	-	30	M30	Left	30	55	55	48	148	110	38	54	2	1	100°	90°	120°	30°	12.500	4
FO6D00305BD00	125	30	M30 x 2	Right	30	55	55	48	148	110	38	54	2	1	100°	90°	120°	30°	12.500	4
FO6D00367AD00	-	35	M36	Right	35	70	70	60	188	144	40	72	3	1	100°	90°	120°	30°	24.500	2
FO6D00367AS00	-	35	M36	Left	35	70	70	60	188	144	40	72	3	1	100°	90°	120°	30°	24.500	2
FO6D00367UD00	160 - 200	35	M36	Right	35	70	70	60	188	144	40	72	3	1	100°	90°	120°	30°	24.500	2

STANDARD
DIN 1434/B

MATERIAL
11SMnPb30 (Steel)

SURFACE TREATMENT
White galvanized

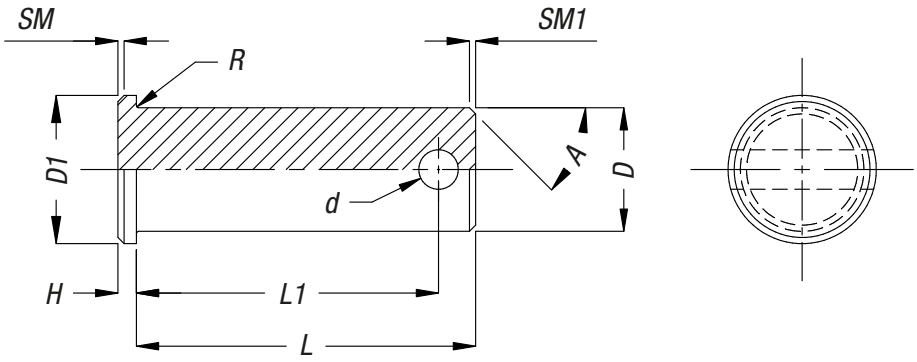

Code	D (h11)	L	L1	d (H14)	D1 (h12)	H	SM	SM1	R	A	Package (pcs)
PE5D000401005	4	12	10	1	6	1	0,5	0,8	0,3	30°	100
PE5D000501205	5	15	12	1,5	8	1,5	0,5	0,8	0,3	30°	100
PE5D000601505	6	18	15	1,6	9	1,5	0,5	1	0,5	30°	100
PE5D000801905	8	23	19,5	2	12	2	1	1	0,5	30°	100
PE5D001002405	10	29	24,5	3,2	14	2	1	1,5	0,5	30°	100
PE5D001202905	12	35	29,5	4	17	3	1,5	2	0,5	30°	50
PE5D001403205	14	40	32,5	4	19	3	1,5	2,5	1	30°	50
PE5D001603705	16	45	37,5	4	21	3	1,5	2,5	1	30°	20
PE5D001804305	18	50	43,5	5	23	3	2	2,5	1	30°	20
PE5D002004705	20	54	47	5	26	4	2	3	1	30°	10
PE5D002505905	25	67	59	6	32	5	2	3	1	30°	10
PE5D003006305	30	71	63	6,3	36	5	2	3	1	30°	4
PE5D003508005	35	90	80	8	44	6	2	4	2	30°	2
PE5D004209805	42	108	98	8	48	6	2	4	2	30°	1
PE5D005011105	50	123	111	10	58	7	2	6	2	30°	1

MATERIAL
11SMnPb30 (Steel)

SURFACE TREATMENT
White galvanized

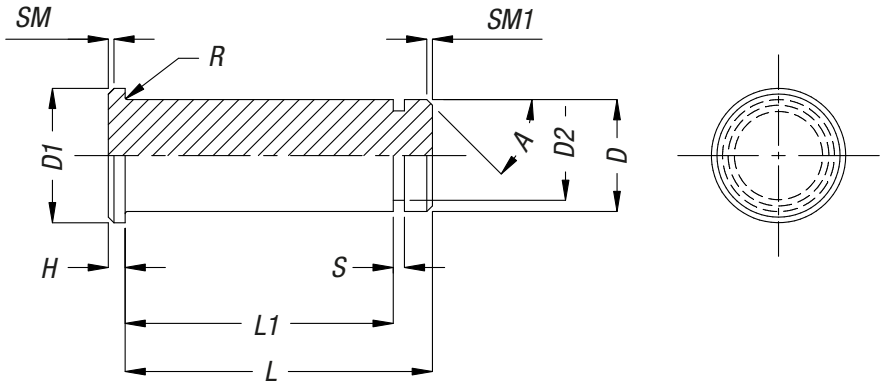

Code	D (h11)	L	L1	D1 (h12)	D2 (h11)	H	SM	SM1	R	S	A	Package (pcs)
PE5T000400805	4	10,5	8,5	6	3,2	1	0,5	0,5	0,3	0,64	30°	100
PE5T000501005	5	13	10,5	8	4	1,5	0,5	0,5	0,3	0,74	30°	100
PE5T000601205	6	15,5	12,5	9	5	1,5	0,5	0,5	0,5	0,74	30°	100
PE5T000801605	8	20	16,5	12	6	2	1	1	0,5	0,94	30°	100
PE5T001002005	10	25	20,5	14	8	2	1	1	0,5	1,05	30°	100
PE5T001202405	12	30	24,5	17	9	3	1,5	1,5	0,5	1,15	30°	50
PE5T001402705	14	33	27,5	19	10	3	1,5	1,5	1	1,25	30°	50
PE5T001603205	16	38,5	32,5	21	12	3	1,5	1,5	1	1,35	30°	20
PE5T002004005	20	46	40,5	26	17,5	4	2	1,5	1	1,8	30°	10
PE5T002505005	25	57	50,5	26	18	5	2	1,5	1	1,8	30°	10

MATERIAL
11SMnPb30 (Steel)

SURFACE TREATMENT
White galvanized

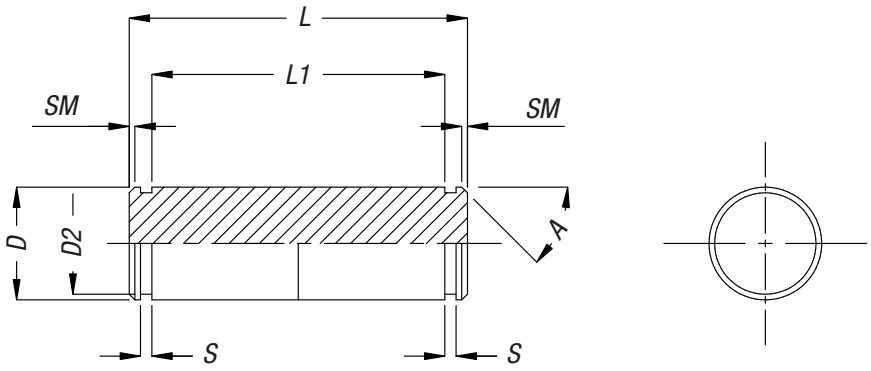

Code	D (h11)	L	L1	D2 (h11)	S	SM	A	Package (pcs)
PE5I000601205	6	17	12	5,7	0,8	0,5	30°	100
PE5I000801605	8	20	16,5	7,6	0,9	0,5	30°	100
PE5I001002005	10	25	20,5	9,6	1,1	0,5	30°	100
PE5I001202405	12	30	24,5	11,5	1,1	1	30°	50
PE5I001402705	14	35	27,5	13,4	1,1	1	30°	50
PE5I001603205	16	39	32,5	15,2	1,1	1	30°	20
PE5I002004005	20	48	40,5	19	1,3	1	30°	10
PE5I002505005	25	60	50,5	23,9	1,3	1	30°	10
PE5I003005505	30	65	55,5	28,6	1,6	1	30°	4
PE5I003507005	35	84	70,5	33,4	1,6	1	30°	2
PE5I004008905	40	104,3	89	37,5	1,85	2	30°	1
PE5I004208905	42	104,3	89	39,5	1,85	2	30°	1
PE5I005010005	50	117,3	100	47	2,15	2	30°	1

PIN WITHOUT GROOVED HEAD
stainless steel

MATERIAL
AISI303 (Stainless steel)

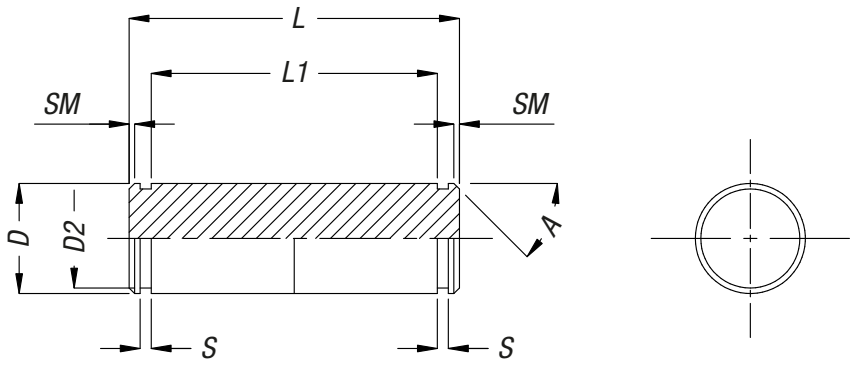

Code	D (h11)	L	L1	D2 (h11)	S	SM	A	Package (pcs)
PE6I000501000	5	15	10,5	4,8	0,7	0,5	30°	100
PE6I000601200	6	17	12,5	5,7	0,8	0,5	30°	100
PE6I000801600	8	20	16,5	7,6	0,9	0,5	30°	100
PE6I001002000	10	25	20,5	9,6	1,1	0,5	30°	100
PE6I001202400	12	30	24,5	11,5	1,1	1	30°	50
PE6I001603200	16	39	32,5	15,2	1,1	1	30°	20
PE6I002004000	20	48	40,5	19	1,3	1	30°	10
PE6I003005500	30	65	55,5	28,6	1,6	1	30°	4
PE6I003507000	35	84	70,5	33,4	1,6	1	30°	2

MATERIAL
C67 (Steel)

SURFACE TREATMENT
White galvanized

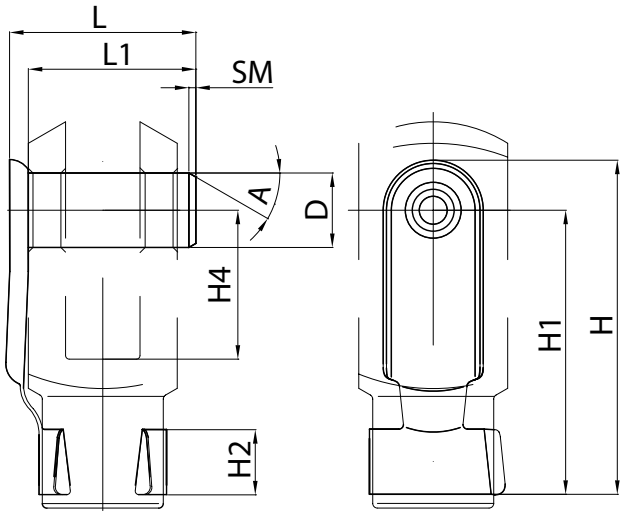

Code	D (h11)	H4	H	H1	H2	L	L1	SM	Package (pcs)
CM5D000400805	4	8	19	15	4,5	11	9	0,5	100
CM5D000501005	5	10	23	19	4,5	13,5	12	0,5	100
CM5D000502005	5	20	33	29	4,5	13,5	12	0,5	100
CM5D000601205	6	12	28	23	6	16	14	0,75	100
CM5D000602405	6	24	40	35	6	16	14	0,75	100
CM5D000801605	8	16	37	31	8	23	19	1	100
CM5D000803205	8	32	53	47	8	23	19	1	100
CM5D001002005	10	20	46	39	10	27	23	1	100
CM5D001004005	10	40	66	59	10	27	23	1	50
CM5D001202405	12	24	55	46	12	32	28	1,25	50
CM5D001204805	12	48	79	71	12	32	28	1,25	50
CM5D001402805	14	28	62	52	14	34	31	1,5	50
CM5D001405605	14	56	92	82	14	34	31	1,5	50
CM5D001603205	16	32	72	62	14	41	36	1,5	20
CM5D001606405	16	64	103	92	16	41	36	1,5	20
CM5D002004005	20	40	88	72	16	49	44	1,5	10

MATERIAL
C67 (Steel)

SURFACE TREATMENT
White galvanized

NOTES
* 1 DaN (decanewton) = 1.02 Kgf (kilogram-force).

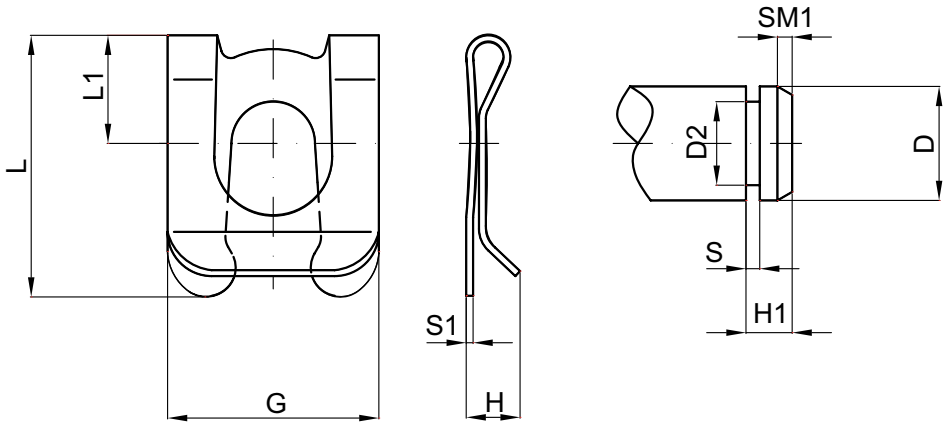

Code	D (h11)	D2 (h11)	G	H	H1	L	L1	S	S1	SM1	Max axial force (DaN) *	Package (pcs)
CM5SL00400005	4	3,2	7	2,3	2	8,5	4	0,64	0,3	0,5	100	100
CM5SL00500005	5	4	9	3,3	2,5	10,7	5	0,74	0,4	0,5	130	100
CM5SL00600005	6	5	11	3,8	3	14,1	6	0,74	0,4	0,8	150	100
CM5SL00800005	8	6	14	4	3,5	17,5	8	0,94	0,5	1	360	100
CM5SL01000005	10	8	18	5	4,5	22,1	10	1,05	0,5	1	640	100
CM5SL01200005	12	9	22	5	5	26	12	1,15	0,5	1,3	960	50
CM5SL01400005	14	10	25	6	5,5	30	13,5	1,25	0,6	1,5	1.132	50
CM5SL01600005	16	12	28	6	6	34	16	1,35	0,6	1,5	1.350	20

MATERIAL
C67 (Steel)

SURFACE TREATMENT
White galvanized

NOTES
* 1 DaN (decanewton) = 1.02 Kgf (kilogram-force).

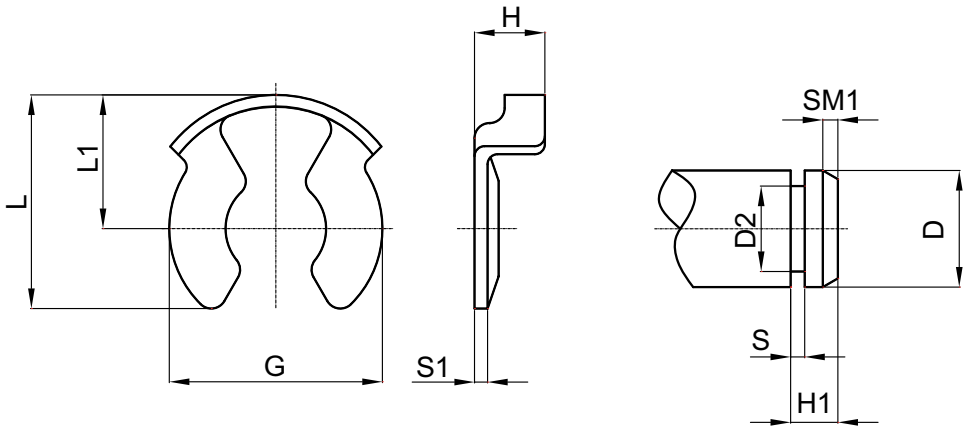

Code	D (h11)	D2 (h11)	G	H	H1	L	L1	S	S1	SM1	Max axial force (DaN) *	Package (pcs)
CM5KL00400005	4	3,2	6,7	2,7	2	7	4,3	0,64	0,4	0,5	150	100
CM5KL00500005	5	4	7,5	2,8	2,5	8,7	5,2	0,74	0,5	0,5	300	100
CM5KL00600005	6	5	10,4	3,5	3	11,5	6,8	0,74	0,5	0,8	485	100
CM5KL00800005	8	6	11,5	4,1	3,5	12,1	7,2	0,94	0,5	1	550	100
CM5KL01000005	10	8	15,6	5,9	4,5	16,3	9,5	1,05	0,6	1	950	100
CM5KL01200005	12	9	16,7	6,1	5	18	10,5	1,15	0,6	1,3	1.070	50
CM5KL01400005	14	10	19	6,5	5,5	20	11,5	1,25	0,7	1,5	1.270	50
CM5KL01600005	16	12	22,7	7,8	6	23,5	13,8	1,35	0,8	1,5	1.400	20
CM5KL02000005	20	16-18	34,5	9	8	34	20	1,8	1	1,5	1.600	10

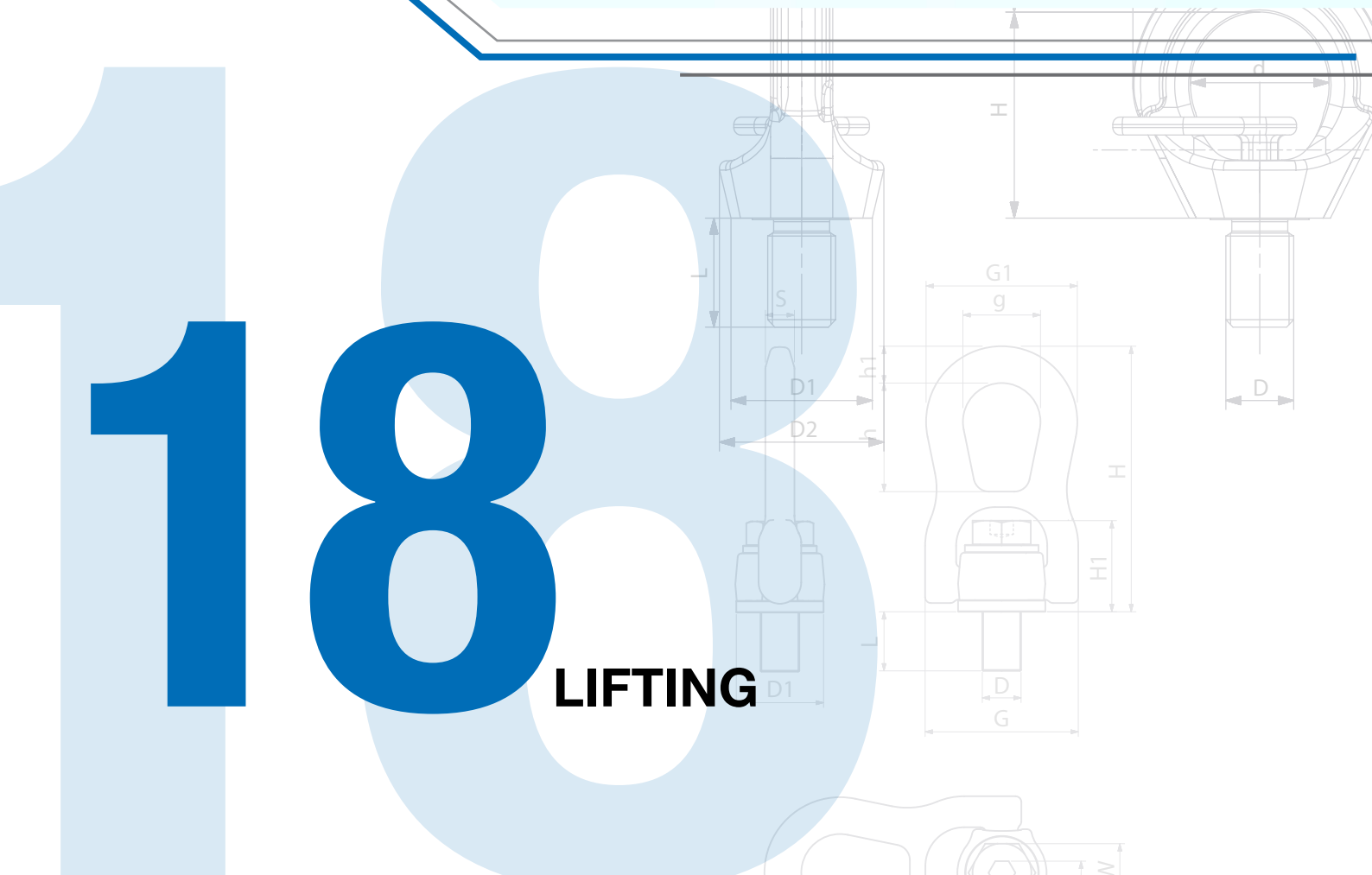

18 LIFTING

Swivel eyebolts with ring
page 18.1

Swivel eyebolts
page 18.5

Swivel eyebolts with bracket
page 18.7

Swivel eyebolts with joint
page 18.9

Polyester lifting slings
page 18.11

SWIVEL EYEBOLT WITH RING
grade 80 CE

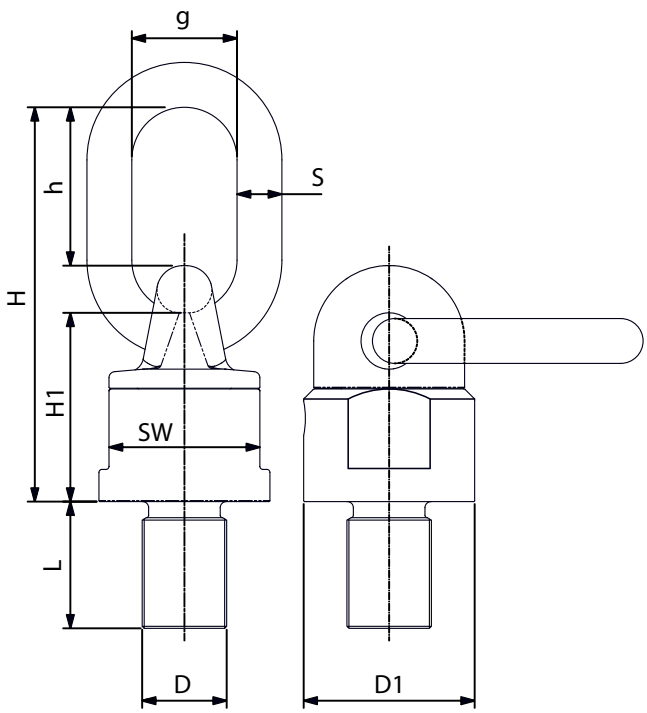

MATERIAL - FINISH
GR80 (Steel) powder coated red RAL 3000

ADJUSTABILITY
360° rotation with self-aligning ring that tilts to 180°

SAFETY FACTOR
4:1

OPERATING TEMPERATURE
-40°C ÷ 200°C

CERTIFICATION
CE marking according *to the Machinery Directive 2006/42/EC*
GS-0A 15-04 - EN1677
DGUV certification

TEST
Magnaflux 100%
Load 100%
20.000 work cycles

USE
Assembled with spheres and particularly suited to facilitate adjustment and tilting of the load.

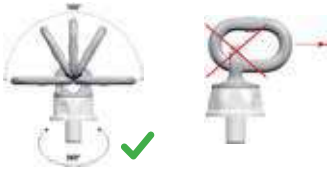

Warning:
the device is not suited to continuous rotary movement with a full load.

NOTES
All eyebolts are marked with the operating load, the thread measurement, the steel grade, CE, and the batch tracing code.
Available with other threading and shaft length.

Code	D	L	W.L.L. (t)	D1	H	H1	h	g	S	SW	Weight (Kg)	Package (pcs)
CT80008016030	M8	16	0,3	38	105	50	46	30	13	30	0,48	1
CT80010018030	M10	18	0,3	38	105	50	46	30	13	30	0,48	1
CT80012018050	M12	18	0,5	38	105	50	46	30	13	30	0,5	1
CT80012025050	M12	25	0,5	38	105	50	46	30	13	30	0,5	1
CT80016020110	M16	20	1,12	38	105	50	46	30	13	30	0,53	1
CT80016030110	M16	30	1,12	38	105	50	46	30	13	30	0,53	1
CT80020030110	M20	30	1,12	38	105	50	46	30	13	30	0,53	1
CT80020030200	M20	30	2	50	131	61	57	34	16	40	1,05	1
CT80024030310	M24	30	3,15	58	153	68	70	40	18	48	1,63	1
CT80030035530	M30	35	5,3	75	165	80	65	45	22	65	2,23	1
CT80030045530	M30	45	5,3	75	165	80	65	45	22	65	2,23	1
CT80030035800	M30	35	8	85	205	95	95	50	23	75	5,3	1
CT80030045800	M30	45	8	85	205	95	95	50	23	75	5,3	1
CT80036054800	M36	54	8	85	205	95	95	50	23	75	5,5	1
CT80042063100	M42	63	10	85	205	95	95	50	23	75	10	1
CT80048060150	M48	60	15	120	280	130	120	70	32	95	10	1
CT80056078150	M56	78	15	120	280	130	120	70	32	95	10	1
CT80064096150	M64	96	15	120	280	130	120	70	32	95	10	1
CT80072108250	M72	108	25	170	338	165	130	90	45	140	29	1
CT80080120300	M80	120	30	170	338	165	130	90	45	140	29	1
CT80090135350	M90	135	35	170	338	165	130	90	45	140	29	1

MATERIAL - FINISH
GR80 (Steel) powder coated red RAL 3000

ADJUSTABILITY
360° rotation with self-aligning ring that tilts to 180°

SAFETY FACTOR
4:1

OPERATING TEMPERATURE
-40°C ÷ 200°C

CERTIFICATION
CE marking according *to the Machinery Directive 2006/42/EC*
GS-OA 15-04 - EN1677
DGUV certification

TEST
Magnaflux 100%
Load 100%
20.000 work cycles

USE
Assembled with spheres and particularly suited to facilitate adjustment and tilting of the load.

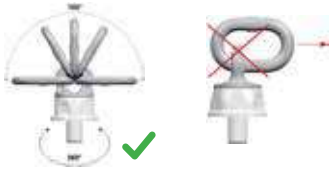

Warning:
the device is not suited to continuous rotary movement with a full load.

NOTES
All eyebolts are marked with the operating load, the thread measurement, the steel grade, CE, and the batch tracing code.
Available with other threading and shaft length.

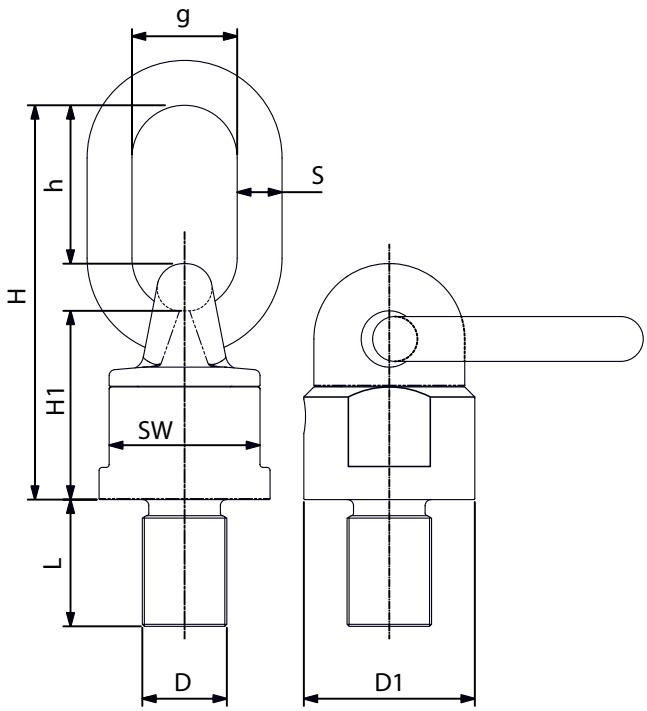

Working load limit W.L.L (t)

Code	D x L	0° 1 arm	0° 2 arms	90° 1 arm	90° 2 arms	0° - 45°	45° - 60° 2 arms	Asymm.	0° - 45°	45° - 60° 3 - 4 arms	Asymm.	Max tightening torque (Nm)
CT80008016030	M8 x 16	1	1	0,3	1	0,42	0,3	0,3	0,6	0,45	0,3	16
CT80010018030	M10 x 18	1	1	0,3	1	0,42	0,3	0,3	0,6	0,45	0,3	16
CT80012018050	M12 x 18	1	2	0,5	1	0,75	0,5	0,5	1,1	0,75	0,5	28
CT80012025050	M12 x 25	1	2	0,5	1	0,75	0,5	0,5	1,1	0,75	0,5	28
CT80016020110	M16 x 20	2	4	1,12	2	1,5	1,12	1,12	2,36	1,6	1,12	70
CT80016030110	M16 x 30	2	4	1,12	2	1,5	1,12	1,12	2,36	1,6	1,12	70
CT80020030110	M20 x 30	2	4	1,12	2	1,5	1,12	1,12	2,36	1,6	1,12	135
CT80020030200	M20 x 30	4	8	2	4	2,8	2	2	4	3	2	135
CT80024030310	M24 x 30	6,3	12,5	3,2	6,3	4,3	3,2	3,2	6,3	5	3,2	230
CT80030035530	M30 x 35	10,6	21,2	5,3	10,6	7,1	5,3	5,3	11,2	8	5,3	465
CT80030045530	M30 x 45	10,6	21,2	5,3	10,6	7,1	5,3	5,3	11,2	8	5,3	465
CT80030035800	M30 x 35	12,5	25	8	16	11,2	8	8	16,8	12	8	465
CT80030045800	M30 x 45	12,5	25	8	16	11,2	8	8	16,8	12	8	465
CT80036054800	M36 x 54	12,5	25	8	16	11,2	8	8	16,8	12	8	814
CT80042063100	M42 x 63	15	30	10	20	14	10	10	21,2	15	10	1.304
CT80048060150	M48 x 60	25	50	15	30	21	15	15	31,5	22,5	15	1.981
CT80056078150	M56 x 78	25	50	15	30	21	15	15	31,5	22,5	15	3.000
CT80064096150	M64 x 96	25	50	15	30	21	15	15	31,5	22,5	15	4.738
CT80072108250	M72 x 108	35	70	25	50	35	25	25	52,5	37,5	25	6.913
CT80080120300	M80 x 120	35	70	30	60	42	30	30	63	45	30	9.625
CT80090135350	M90 x 135	35	70	35	70	49	35	35	73,5	52,5	35	14.000

SWIVEL EYEBOLT WITH RING
grade 100 CE

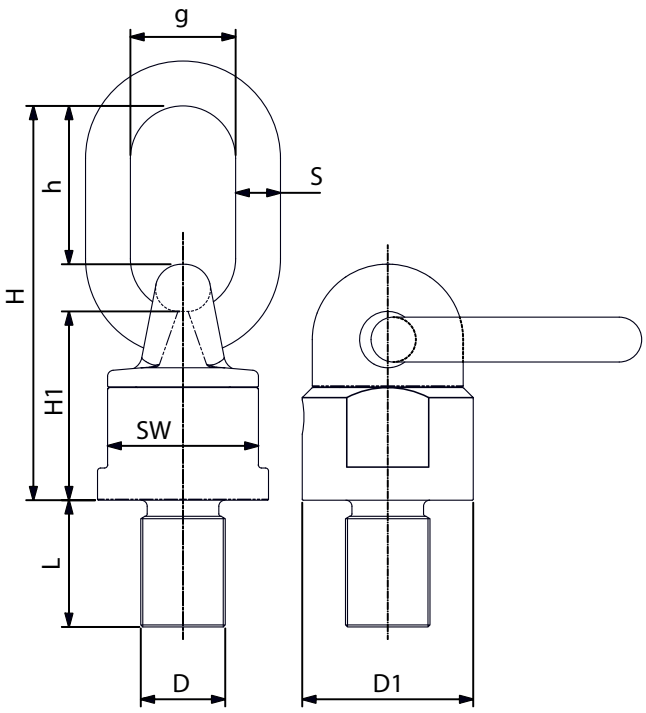

MATERIAL - FINISH
GR100 (Steel) powder coated red RAL 3022

ADJUSTABILITY
360° rotation with self-aligning ring that tilts to 180°

SAFETY FACTOR
4:1

OPERATING TEMPERATURE
-40°C ÷ 200°C

CERTIFICATION
CE marking according *to the Machinery Directive 2006/42/EC*
GS-0A 15-04 - EN1677
DGUV certification

TEST
Magnaflux 100%
Load 100%
20.000 work cycles

USE
Assembled with spheres and particularly suited to facilitate adjustment and tilting of the load.

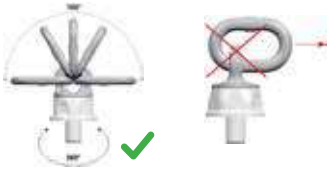

Warning:
the device is not suited to continuous rotary movement with a full load.

NOTES
All eyebolts are marked with the operating load, the thread measurement, the steel grade, CE, and the batch tracing code.
Available with other threading and shaft length.

Code	D	L	W.L.L. (t)	D1	H	H1	h	g	S	SW	Weight (Kg)	Package (pcs)
CT800X1001805	M10	18	0,5	38	105	50	46	30	13	30	0,48	1
CT800X1201807	M12	18	0,7	38	105	50	46	30	13	30	0,5	1
CT800X1402010	M14	20	1	38	105	50	46	30	13	30	0,53	1
CT800X1602014	M16	20	1,4	38	105	50	46	30	13	30	0,53	1
CT800X2003017	M20	30	1,7	38	105	50	46	30	13	30	0,53	1
CT800X2003025	M20	30	2,5	50	131	61	57	34	16	40	1,05	1
CT800X2403017	M24	30	1,7	38	105	50	46	30	13	30	0,53	1
CT800X2403040	M24	30	4	58	153	68	70	40	18	48	1,63	1
CT800X3003540	M30	35	4	58	153	68	70	40	18	48	1,63	1
CT800X3003567	M30	35	6,7	80	156	71	65	45	22	70	2,85	1
CT800X3004580	M30	45	8	90	200	86	91	50	23	80	4,4	1
CT800X3605410	M36	54	10	90	200	86	91	50	23	80	4,4	1
CT800X4206312	M42	63	12,5	90	200	86	91	50	23	80	5,2	1
CT800X4506012	M45	60	12,5	90	200	86	91	50	23	80	5,2	1
CT800X4506016	M45	60	16	120	262	112	120	70	32	100	10,9	1
CT800X4806017	M48	60	17	120	262	112	120	70	32	100	10,9	1
CT800X4807212	M48	72	12,5	90	200	86	91	50	23	80	5,2	1
CT800X5607818	M56	78	18	120	262	112	120	70	32	100	10,9	1
CT800X6409628	M64	96	28	170	333	165	124	90	45	140	29	1
CT800X7210831	M72	108	31,5	170	333	165	124	90	45	140	29	1
CT800X8012035	M80	120	35	170	333	165	124	90	45	140	29	1
CT800X9013540	M90	135	40	170	333	165	124	90	45	140	29	1

MATERIAL - FINISH
GR100 (Steel) powder coated red RAL 3022

ADJUSTABILITY
360° rotation with self-aligning ring that tilts to 180°

SAFETY FACTOR
4:1

OPERATING TEMPERATURE
-40°C ÷ 200°C

CERTIFICATION
CE marking according *to the Machinery Directive 2006/42/EC*
GS-OA 15-04 - EN1677
DGUV certification

TEST
Magnaflux 100%
Load 100%
20.000 work cycles

USE
Assembled with spheres and particularly suited to facilitate adjustment and tilting of the load.

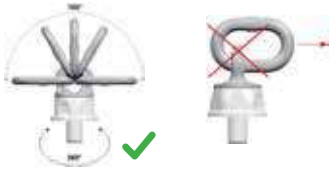

Warning:
the device is not suited to continuous rotary movement with a full load.

NOTES
All eyebolts are marked with the operating load, the thread measurement, the steel grade, CE, and the batch tracing code.
Available with other threading and shaft length.

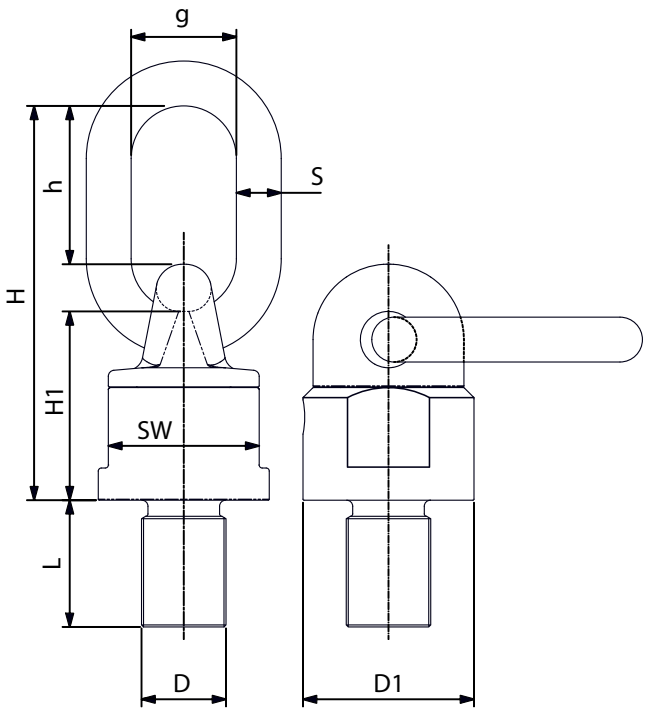

Working load limit W.L.L (t)

Code	D x L	0°	0°	90°	90°	0° - 45°	45° - 60°	Asymm.	0° - 45°	45° - 60°	Asymm.	Max tightening torque
		1 arm	2 arms	1 arm	2 arms	2 arms			3 - 4 arms			(Nm)
CT800X1001805	M10 x 18	1	2	0,5	1	0,75	0,5	0,5	1	0,75	0,5	16
CT800X1201807	M12 x 18	1,4	2,4	0,7	1,4	1	0,7	0,7	1,4	1	0,7	28
CT800X1402010	M14 x 20	2	4	1	2	1,4	1	1	2,1	1,5	1	46
CT800X1602014	M16 x 20	2,8	5,6	1,4	2,8	2	1,4	1,4	3	2,1	1,4	70
CT800X2003017	M20 x 30	3,4	6,8	1,7	3,4	2,4	1,7	1,7	3,6	2,5	1,7	135
CT800X2003025	M20 x 30	5	10	2,5	5	3,5	2,5	2,5	5,3	3,7	2,5	135
CT800X2403017	M24 x 30	3,4	6,8	1,7	3,4	2,4	1,7	1,7	3,6	2,5	1,7	135
CT800X2403040	M24 x 30	8	16	4	8	5,6	4	4	8,4	6	4	230
CT800X3003540	M30 x 35	8	16	4	8	5,6	4	4	8,4	6	4	230
CT800X3003567	M30 x 35	12	26,8	6,7	13,4	9,4	6,7	6,7	14	10	6,7	465
CT800X3004580	M30 x 45	12,5	25	8	16	11,2	8	8	16,8	12	8	465
CT800X3605410	M36 x 54	15	30	10	20	14	10	10	21,2	15	10	814
CT800X4206312	M42 x 63	15	34	12,5	25	17,5	12,5	12,5	26,2	18,7	12,5	1.304
CT800X4506012	M45 x 60	15	34	12,5	25	17,5	12,5	12,5	26,2	18,7	12,5	1.304
CT800X4506016	M45 x 60	25	50	16	30	21,2	15	15	31,5	22,4	15	1.670
CT800X4806017	M48 x 60	25	50	17	34	23,5	17	17	35,7	25,5	17	1.981
CT800X4807212	M48 x 72	15	34	12,5	25	17,5	12,5	12,5	26,2	18,7	12,5	1.304
CT800X5607818	M56 x 78	25	50	18	36	25,2	18	18	37	27	18	3.000
CT800X6409628	M64 x 96	32,5	84	28	56	39,2	28	28	58,8	42	28	4.738
CT800X7210831	M72 x 108	50	100	31,5	63	44,1	31,5	31,5	66,2	47,2	31,5	6.913
CT800X8012035	M80 x 120	50	100	35	70	49	35	35	73,5	52,5	35	9.625
CT800X9013540	M90 x 135	50	100	40	80	56	40	40	85	60	40	14.000

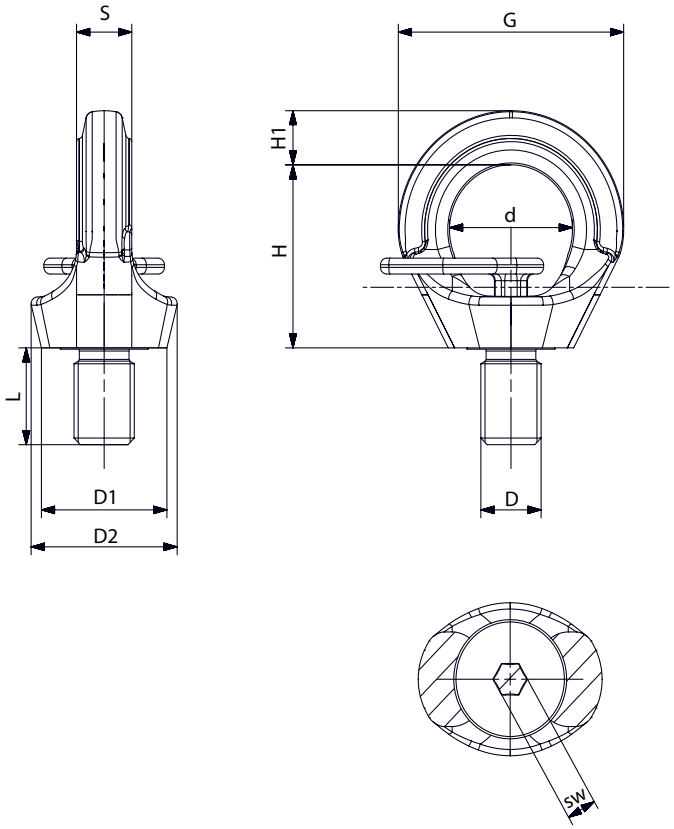

MATERIAL - FINISH
Body: GR100 (Steel) powder coated red RAL 3022
Screw: Cl 10.9 Burnished (steel)

ADJUSTABILITY
Rotation at 360°

SAFETY FACTOR
4:1

OPERATING TEMPERATURE
-40°C ÷ 200°C

CERTIFICATION
CE marking according *to the Machinery Directive 2006/42/EC*
GS-0A 15-04 - EN1677
DGUV certification

TEST
Magnaflux 100%
Load 100%
20.000 work cycles

USE
Its properties allow self-alignment toward the angle of rope/chain pulling, ensuring much safer lifting than classic DIN eyebolts.

Warning:
the device is not suited to rotation with a full load.

NOTES
All eyebolts are marked with the operating load, the thread measurement, the steel grade, CE, and the batch tracing code.
Available with other threading and shaft length.

Code without key	Code with key	D	L	W.L.L. (t)	D1	D2	H	H1	G	d	S	sw	Weight (Kg)	Package (pcs)
CT807XHT00800	CT807XCHT0800	M8	12	0,3	25,5	30	33,7	10	46	25	9,8	12	0,12	1
CT807XHT01000	CT807XCHT1000	M10	15	0,4	25,5	30	33,7	10	46	25	9,8	15	0,12	1
CT807XHT01200	CT807XCHT1200	M12	18	0,75	30,6	36,5	41,5	12,5	55,5	30	11,5	18	0,2	1
CT807XHT01400	CT807XCHT1400	M14	18	0,75	30,6	36,5	41,5	12,5	55,5	30	11,5	18	0,2	1
CT807XHT01600	CT807XCHT1600	M16	24	1,5	36,5	42	49,5	14,5	64,5	35	15,7	24	0,35	1
CT807XHT01800	CT807XCHT1800	M18	24	1,5	36,5	42	49,5	14,5	64,5	35	15,7	24	0,35	1
CT807XHT02000	CT807XCHT2000	M20	30	2,3	42	52,5	58	16	74,5	40	18	30	0,6	1
CT807XHT02200	CT807XCHT2200	M22	30	2,3	42	52,5	58	16	74,5	40	18	30	0,6	1
CT807XHT02400	CT807XCHT2400	M24	36	3,2	50	61	69	20,5	90	49	22	36	1	1
CT807XHT02700	CT807XCHT2700	M27	36	3,2	50	61	69	20,5	90	49	22	36	1	1
CT807XHT03000	CT807XCHT3000	M30	45	4,5	66	75	86	25,5	111	60	28	45	2	1
CT807XHT03300	CT807XCHT3300	M33	45	4,5	66	75	86	25,5	111	60	28	45	2	1
CT807XHT03600	CT807XCHT3600	M36	54	7	77	96,5	105	32	135	74	30	55	3,4	1
CT807XHT04200	CT807XCHT4200	M42	63	9	87	110	118	38	158	82	37	65	5,7	1
CT807XHT04800	CT807XCHT4800	M48	72	12	102	124,5	137	43	180	95	38	72	8,5	1

MATERIAL - FINISH
Body: GR100 (Steel) powder coated red RAL 3022
Screw: Cl 10.9 Burnished (steel)

ADJUSTABILITY
Rotation at 360°

SAFETY FACTOR
4:1

OPERATING TEMPERATURE
-40°C ÷ 200°C

CERTIFICATION
CE marking according *to the Machinery Directive 2006/42/EC*
GS-0A 15-04 - EN1677
DGUV certification

TEST
Magnaflux 100%
Load 100%
20.000 work cycles

USE
Its properties allow self-alignment toward the angle of rope/chain pulling, ensuring much safer lifting than classic DIN eyebolts.

Warning:
the device is not suited to rotation with a full load.

NOTES
All eyebolts are marked with the operating load, the thread measurement, the steel grade, CE, and the batch tracing code.
Available with other threading and shaft length.

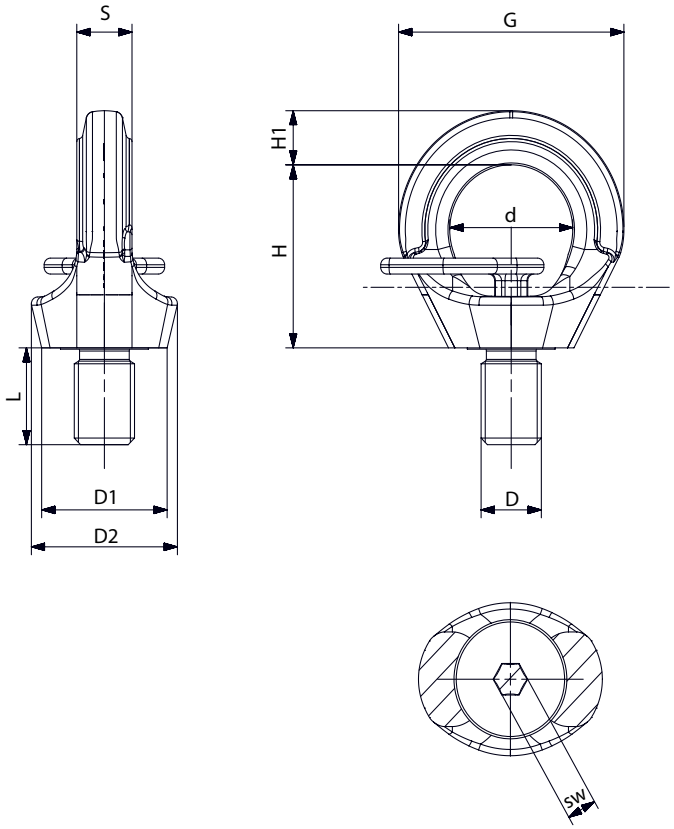

Working load limit W.L.L (t)

Code without key	Code with key	D x L	G 0°	G 0°	G 90°	G 90°	0° - 45°	45° - 60°	Asymm.	0° - 45°	45° - 60°	Asymm.	Max tightening torque
			1 arm	2 arms	1 arm	2 arms	2 arms			3 - 4 arms			(Nm)
CT807XHT00800	CT807XCHT0800	M8 x 12	1	2	0,3	0,6	0,42	0,3	0,3	0,63	0,45	0,3	8
CT807XHT01000	CT807XCHT1000	M10 x 15	1	2	0,4	0,8	0,56	0,4	0,4	0,84	0,6	0,4	16
CT807XHT01200	CT807XCHT1200	M12 x 18	2	4	0,75	1,5	1	0,75	0,75	1,6	1,12	0,75	25
CT807XHT01400	CT807XCHT1400	M14 x 18	2	4	0,75	1,5	1	0,75	0,75	1,6	1,12	0,75	30
CT807XHT01600	CT807XCHT1600	M16 x 24	4	8	1,5	3	2	1,5	1,5	3,15	2,25	1,5	60
CT807XHT01800	CT807XCHT1800	M18 x 24	4	8	1,5	3	2	1,5	1,5	3,15	2,25	1,5	70
CT807XHT02000	CT807XCHT2000	M20 x 30	6	12	2,3	4,6	3,22	2,3	2,3	4,83	3,45	2,3	110
CT807XHT02200	CT807XCHT2200	M22 x 30	6	12	2,3	4,6	3,22	2,3	2,3	4,83	3,45	2,3	120
CT807XHT02400	CT807XCHT2400	M24 x 36	8	16	3,2	6,4	4,48	3,2	3,2	6,7	4,8	3,2	195
CT807XHT02700	CT807XCHT2700	M27 x 36	8	16	3,2	6,4	4,48	3,2	3,2	6,7	4,8	3,2	240
CT807XHT03000	CT807XCHT3000	M30 x 45	12	24	4,5	9	6,3	4,5	4,5	9,4	6,7	4,5	320
CT807XHT03300	CT807XCHT3300	M33 x 45	12	24	4,5	9	6,3	4,5	4,5	9,4	6,7	4,5	350
CT807XHT03600	CT807XCHT3600	M36 x 54	16	32	7	14	9,8	7	7	14,7	10,5	7	585
CT807XHT04200	CT807XCHT4200	M42 x 63	24	45	9	18	12,6	9	9	18,9	13,5	9	920
CT807XHT04800	CT807XCHT4800	M48 x 72	32	64	12	24	16,8	12	12	25,2	18	12	1.590

SWIVEL EYEBOLT WITH BRACKET
grade 100 CE

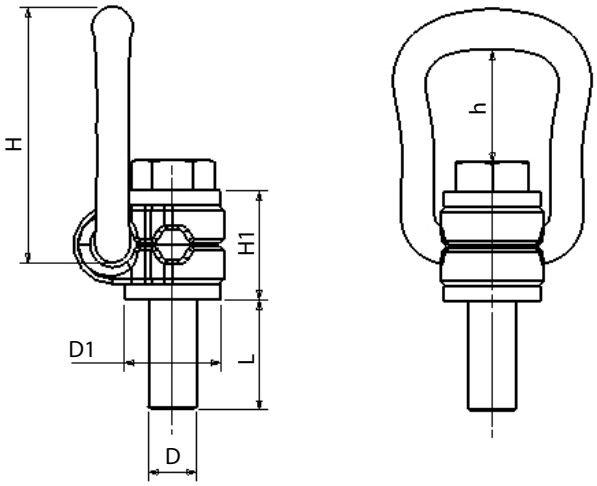

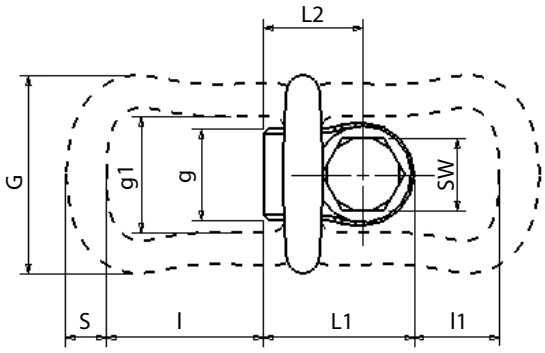

MATERIAL - SURFACE TREATMENT
Body: GR100 (Steel) powder coated red RAL 3022
Screw: Cl 10.9 (Steel) GEOMET

ADJUSTABILITY
360° rotation with ring that tilts to 45°

SAFETY FACTOR
4:1

OPERATING TEMPERATURE
-40°C ÷ 200°C

CERTIFICATION
CE marking according *to the Machinery Directive 2006/42/EC*
GS-0A 15-04 - EN1677
DGUV certification

TEST
Magnaflux 100%
Load 100%
20.000 work cycles

USE
Particularly suitable for lifting at 90°.

Warning:
the device is not suited to rotation with a full load.

NOTES
All eyebolts are marked with the operating load, the thread measurement, the steel grade, CE, and the batch tracing code.
Available with other threading and shaft length.

Code	D	L	W.L.L. (t)	D1	H	H1	L1	L2	l	l1	G	g	g1	h	S	SW	Weight (Kg)	Package (pcs)
CT806X0800000	M8	15	0,3	25	78	30	41	26,5	51	35	57	24	34	43	10	13	0,275	1
CT806X1000000	M10	15	0,63	25	78	30	41	26,5	51	35	57	24	34	42	10	17	0,29	1
CT806X1200000	M12	23	1	32	85	36	50	33,0	52	28	66	30	38	40	14	19	0,5	1
CT806X1600000	M16	24	1,5	32	85	36	50	33,0	52	28	66	30	38	38	14	24	0,51	1
CT806X2000000	M20	31	2,5	45	111	44	68	42,5	71	36	87	48	55	54	16	30	1,25	1
CT806X2400000	M24	37	4	45	111	44	68	42,5	71	36	87	48	55	51	16	36	1,3	1
CT806X2700000	M27	37	4	60	145	63	91	58,5	86	47	109	54	66	64	23	41	3,15	1
CT806X3000000	M30	45	5	60	145	65	91	58,5	86	47	109	54	66	62	23	46	3,25	1
CT806X3607000	M36	50	7	60	145	55	91	58,5	86	43	109	54	66	60	23	55	3,3	1
CT806X3600000	M36	59	8	70	190	81	108	72,5	115	74	136	62	78	88	28	55	5,9	1
CT806X4210000	M42	75	10	70	190	75	108	72,5	115	70	136	62	78	86	28	65	6,5	1
CT806X4200000	M42	63	15	85	242	89	131	87,5	151	97	169	68	97	121	36	65	11,2	1
CT806X4800000	M48	71	20	95	242	89	131	87,5	151	93	169	68	97	117	36	75	11,6	1

MATERIAL - SURFACE TREATMENT
Body: GR100 (Steel) powder coated red RAL 3022
Screw: Cl 10.9 (Steel) GEOMET

ADJUSTABILITY
360° rotation with ring that tilts to 45°

SAFETY FACTOR
4:1

OPERATING TEMPERATURE
-40°C ÷ 200°C

CERTIFICATION
CE marking according *to the Machinery Directive 2006/42/EC*
GS-OA 15-04 - EN1677
DGUV certification

TEST
Magnaflux 100%
Load 100%
20.000 work cycles

USE
Particularly suitable for lifting at 90°.

Warning:
the device is not suited to rotation with a full load.

NOTES
All eyebolts are marked with the operating load, the thread measurement, the steel grade, CE, and the batch tracing code.
Available with other threading and shaft length.

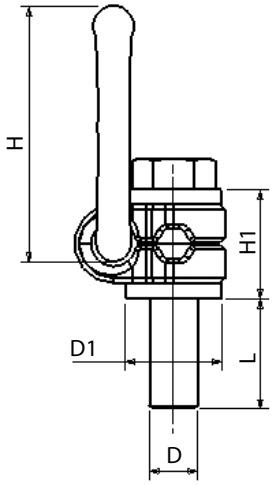

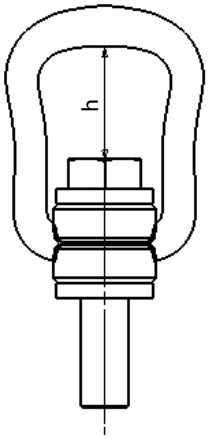

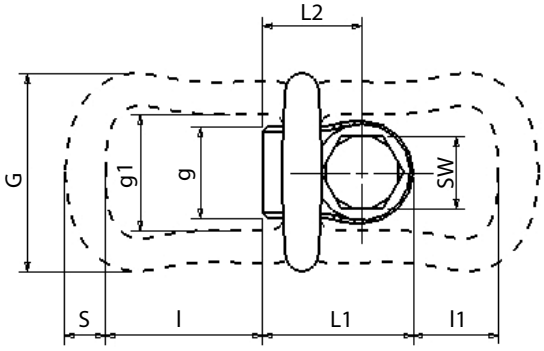

Working load limit W.L.L (t)

Code	D x L	0°	0°	90°	90°	0° - 45°	45° - 60°	Asymm.	0° - 45°	45° - 60°	Asymm.	Max tightening torque
		1 arm	2 arms	1 arm	2 arms	2 arms			3 - 4 arms			(Nm)
CT806X0800000	M8 x 15	0,3	0,6	0,3	0,6	0,42	0,3	0,3	0,63	0,45	0,3	30
CT806X1000000	M10 x 15	1	1	1	1	1	1	1	1,3	1	1	60
CT806X1200000	M12 x 23	1	2	1	2	1	1	1	2,1	1,5	1	100
CT806X1600000	M16 x 24	2	3	2	3	2	2	2	3,2	2,3	2	150
CT806X2000000	M20 x 31	3	5	3	5	4	3	3	5,3	3,8	3	250
CT806X2400000	M24 x 37	4	8	4	8	6	4	4	8,4	6	4	400
CT806X2700000	M27 x 37	4	8	4	8	6	4	4	8,4	6	4	400
CT806X3000000	M30 x 45	5	10	5	10	7	5	5	10,5	7,5	5	500
CT806X3607000	M36 x 50	7	14	7	14	10	7	7	14,7	10,4	7	700
CT806X3600000	M36 x 59	8	16	8	16	11	8	8	16,8	12	8	800
CT806X4210000	M42 x 75	10	20	10	20	14	10	10	21	15	10	925
CT806X4200000	M42 x 63	15	30	15	30	21	15	15	31,5	22,5	15	1.500
CT806X4800000	M48 x 71	20	40	20	40	28	20	20	42	30	20	2.000

SWIVEL EYEBOLT WITH JOINT

grade 100 CE

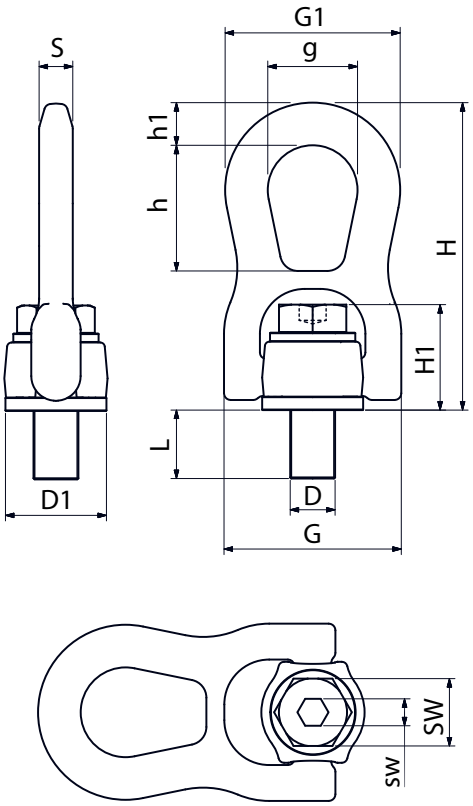

MATERIAL - SURFACE TREATMENT
Body: GR100 (Steel) powder coated red RAL 3022
Screw: Cl 10.9 (Steel) GEOMET

ADJUSTABILITY
360° rotation with self-aligning ring that tilts to 180°

SAFETY FACTOR
5:1

OPERATING TEMPERATURE
-40°C ÷ 200°C

CERTIFICATION
CE marking according *to the Machinery Directive 2006/42/EC*

TEST
Magnaflux 100%
Load 100%
20.000 work cycles

USE
Reduced footprint due to the lowering of the ring after use.

Warning:
the device is not suited to rotation with a full load

NOTES
All eyebolts are marked with the operating load, the thread measurement, the steel grade, CE, and the batch tracing code.
Available with other threading and shaft length.

Code	D	L	W.L.L. (t)	D1	H	H1	G	G1	g	h	h1	S	sw	SW	Weight (Kg)	Package (pcs)
CT811X0080000	M8	12	0,3	30	99	33,5	55	56	28	40	14	11	5	13	0,375	1
CT811X0100000	M10	15	0,6	30	99	34,5	55	56	28	40	14	11	6	17	0,375	1
CT811X0120000	M12	18	1	30	99	35,5	55	56	28	40	14	11	7	19	0,375	1
CT811X0140000	M14	21	1,3	47	135,5	46	78	74,5	38	55	18	17	7	22	1,3	1
CT811X0160000	M16	25	1,6	47	135,5	46,5	78	74,5	38	55	18	17	10	24	1,3	1
CT811X0180000	M18	27	2	47	135,5	47	78	74,5	38	55	18	17	10	27	1,3	1
CT811X0200000	M20	30	2,5	47	135,5	48	78	74,5	38	55	18	17	12	30	1,3	1
CT811X0220000	M22	33	3	62	198,5	63,5	114,5	106	56	84	25	22	12	32	4	1
CT811X0240000	M24	36	4	62	198,5	64,5	114,5	106	56	84	25	22	14	36	4	1
CT811X0270000	M27	40	5	62	198,5	66,5	114,5	106	56	84	25	22	14	41	4	1
CT811X0300000	M30	45	6,3	62	198,5	68	114,5	106	56	84	25	22	17	46	4	1

MATERIAL - SURFACE TREATMENT
Body: GR100 (Steel) powder coated red RAL 3022
Screw: Cl 10.9 (Steel) GEOMET

ADJUSTABILITY
360° rotation with self-aligning ring that tilts to 180°

SAFETY FACTOR
5:1

OPERATING TEMPERATURE
-40°C ÷ 200°C

CERTIFICATION
CE marking according *to the Machinery Directive 2006/42/EC*

TEST
Magnaflux 100%
Load 100%
20.000 work cycles

USE
Reduced footprint due to the lowering of the ring after use.

Warning:
the device is not suited to rotation with a full load.

NOTES
All eyebolts are marked with the operating load, the thread measurement, the steel grade, CE, and the batch tracing code.
Available with other threading and shaft length.

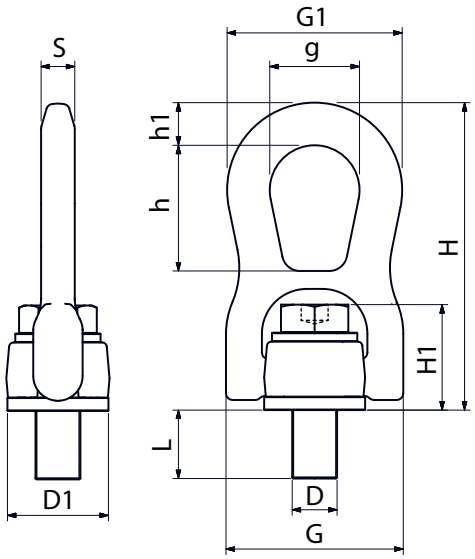

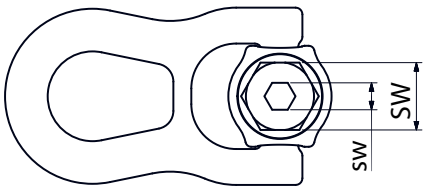

Working load limit W.L.L (t)

Code	D x L	G 0°	G 0°	G 90°	G 90°	0° - 45°	45° - 60°	Asymm.	0° - 45°	45° - 60°	Asymm.	Max tightening torque
		1 arm	2 arms	1 arm	2 arms	2 arms			3 - 4 arms			(Nm)
CT811X0080000	M8 x 12	0,5	1	0,3	0,6	0,4	0,3	0,3	0,6	0,45	0,3	10
CT811X0100000	M10 x 15	1	2	0,6	1,2	0,8	0,6	0,6	1,3	0,9	0,6	15
CT811X0120000	M12 x 18	1,3	2,6	1	2	1,4	1	1	2,1	1,5	1	25
CT811X0140000	M14 x 21	2	4	1,3	2,6	1,8	1,3	1,3	2,7	1,9	1,3	30
CT811X0160000	M16 x 25	2,5	5	1,6	3,2	2,2	1,6	1,6	3,4	2,4	1,6	60
CT811X0180000	M18 x 27	3	6	2	4	2,8	2	2	4,2	3	2	100
CT811X0200000	M20 x 30	3,5	7	2,5	5	3,5	2,5	2,5	5,3	3,7	2,5	120
CT811X0220000	M22 x 33	4,5	9	3	6	4,2	3	3	6,3	4,5	3	130
CT811X0240000	M24 x 36	5,5	11	4	8	5,6	4	4	8,4	6	4	200
CT811X0270000	M27 x 40	6,5	13	5	10	7	5	5	10,5	7,5	5	250
CT811X0300000	M30 x 45	7	14	6,3	12,6	8,8	6,3	6,3	13,2	9,4	6,3	350

LIFTING STRAP WITH SLOTS
polyester

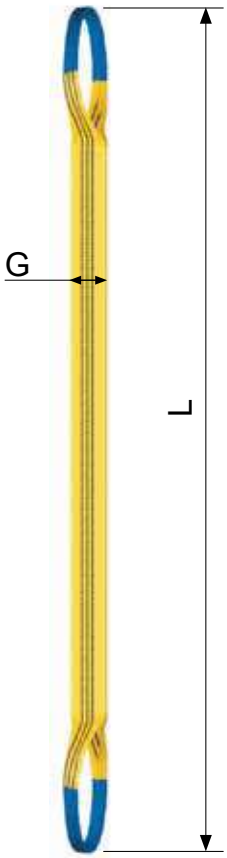

STANDARD
EN 1492-1

MATERIAL
PES (Polyester)

COLOUR
See table (European standards)

SAFETY FACTOR
7:1

CERTIFICATION
CE marking according to the Machinery Directive 89392 CEE II A

USE

The strap must be used on flat surfaces. In fact, it could become damaged with excessive curvature (example: conventional grills and hooks, etc.).
An optimal contact surface can be calculated as follows: radius of curvature ≥ 0.75 x strap width.

NOTES
All straps have a label sewn inside the slot indicating the length, capacity in various work positions, and marking. Available in other lengths.

Code	Colour	G	L	Working load limit W.L.L (t)				Package (pcs)
						45°		
CTC4101005000	VI Purple	30	500	1	2	1,4	0,8	1
CTC4101010000	VI Purple	30	1.000	1	2	1,4	0,8	1
CTC4101015000	VI Purple	30	1.500	1	2	1,4	0,8	1
CTC4101020000	VI Purple	30	2.000	1	2	1,4	0,8	1
CTC4101025000	VI Purple	30	2.500	1	2	1,4	0,8	1
CTC4101030000	VI Purple	30	3.000	1	2	1,4	0,8	1
CTC4101040000	VI Purple	30	4.000	1	2	1,4	0,8	1
CTC4101050000	VI Purple	30	5.000	1	2	1,4	0,8	1
CTC4101060000	VI Purple	30	6.000	1	2	1,4	0,8	1
CTC4101080000	VI Purple	30	8.000	1	2	1,4	0,8	1
CTC4101100000	VI Purple	30	10.000	1	2	1,4	0,8	1
CTC4101010050	VI Purple	50	1.000	1	2	1,4	0,8	1
CTC4101020050	VI Purple	50	2.000	1	2	1,4	0,8	1
CTC4101030050	VI Purple	50	3.000	1	2	1,4	0,8	1
CTC4101040050	VI Purple	50	4.000	1	2	1,4	0,8	1
CTC4102010000	VE Green	60	1.000	2	4	2,8	1,6	1
CTC4102015000	VE Green	60	1.500	2	4	2,8	1,6	1
CTC4102020000	VE Green	60	2.000	2	4	2,8	1,6	1
CTC4102025000	VE Green	60	2.500	2	4	2,8	1,6	1
CTC4102030000	VE Green	60	3.000	2	4	2,8	1,6	1
CTC4102040000	VE Green	60	4.000	2	4	2,8	1,6	1
CTC4102050000	VE Green	60	5.000	2	4	2,8	1,6	1
CTC4102060000	VE Green	60	6.000	2	4	2,8	1,6	1
CTC4102080000	VE Green	60	8.000	2	4	2,8	1,6	1
CTC4102100000	VE Green	60	10.000	2	4	2,8	1,6	1
CTC4103010000	GI Yellow	90	1.000	3	6	4,2	2,4	1
CTC4103015000	GI Yellow	90	1.500	3	6	4,2	2,4	1
CTC4103020000	GI Yellow	90	2.000	3	6	4,2	2,4	1
CTC4103025000	GI Yellow	90	2.500	3	6	4,2	2,4	1
CTC4103030000	GI Yellow	90	3.000	3	6	4,2	2,4	1
CTC4103040000	GI Yellow	90	4.000	3	6	4,2	2,4	1

STANDARD
EN 1492-1

MATERIAL
PES (Polyester)

COLOUR
See table (European standards)

SAFETY FACTOR
7:1

CERTIFICATION
CE marking according to the Machinery Directive 89392 CEE II A

USE

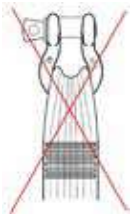

The strap must be used on flat surfaces. In fact, it could become damaged with excessive curvature (example: conventional grills and hooks, etc.).
An optimal contact surface can be calculated as follows: radius of curvature ≥ 0.75 x strap width.

NOTES
All straps have a label sewn inside the slot indicating the length, capacity in various work positions, and marking. Available in other lengths.

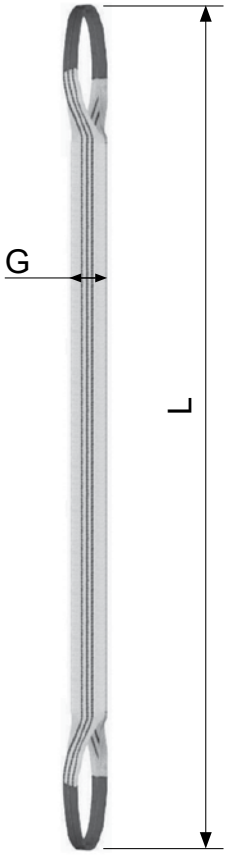

Code	Colour	G	L	Working load limit W.L.L (t)				Package (pcs)
						45°		
CTC4103050000	GI Yellow	90	5.000	3	6	4,2	2,4	1
CTC4103060000	GI Yellow	90	6.000	3	6	4,2	2,4	1
CTC4103080000	GI Yellow	90	8.000	3	6	4,2	2,4	1
CTC4103100000	GI Yellow	90	10.000	3	6	4,2	2,4	1
CTC4104010000	GR Grey	120	1.000	4	8	5,6	3,2	1
CTC4104020000	GR Grey	120	2.000	4	8	5,6	3,2	1
CTC4104030000	GR Grey	120	3.000	4	8	5,6	3,2	1
CTC4104040000	GR Grey	120	4.000	4	8	5,6	3,2	1
CTC4104050000	GR Grey	120	5.000	4	8	5,6	3,2	1
CTC4104060000	GR Grey	120	6.000	4	8	5,6	3,2	1
CTC4104080000	GR Grey	120	8.000	4	8	5,6	3,2	1
CTC4104100000	GR Grey	120	10.000	4	8	5,6	3,2	1
CTC4104120000	GR Grey	120	12.000	4	8	5,6	3,2	1
CTC4105010000	RO Red	150	1.000	5	10	7	4	1
CTC4105020000	RO Red	150	2.000	5	10	7	4	1
CTC4105030000	RO Red	150	3.000	5	10	7	4	1
CTC4105040000	RO Red	150	4.000	5	10	7	4	1
CTC4105050000	RO Red	150	5.000	5	10	7	4	1
CTC4105060000	RO Red	150	6.000	5	10	7	4	1
CTC4105080000	RO Red	150	8.000	5	10	7	4	1
CTC4105100000	RO Red	150	10.000	5	10	7	4	1
CTC4105120000	RO Red	150	12.000	5	10	7	4	1
CTC4106020000	MA Brown	180	2.000	6	12	8,4	4,8	1
CTC4106030000	MA Brown	180	3.000	6	12	8,4	4,8	1
CTC4106040000	MA Brown	180	4.000	6	12	8,4	4,8	1
CTC4106050000	MA Brown	180	5.000	6	12	8,4	4,8	1
CTC4106060000	MA Brown	180	6.000	6	12	8,4	4,8	1
CTC4106080000	MA Brown	180	8.000	6	12	8,4	4,8	1
CTC4106100000	MA Brown	180	10.000	6	12	8,4	4,8	1
CTC4108020000	BL Blue	240	2.000	8	16	11,2	6,4	1
CTC4108030000	BL Blue	240	3.000	8	16	11,2	6,4	1

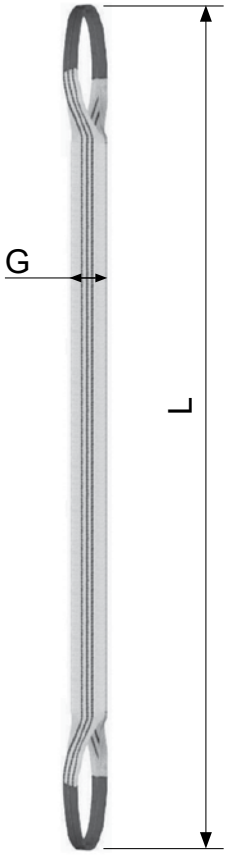

STANDARD
EN 1492-1

MATERIAL
PES (Polyester)

COLOUR
See table (European standards)

SAFETY FACTOR
7:1

CERTIFICATION
CE marking according to the Machinery Directive 89392 CEE II A

USE

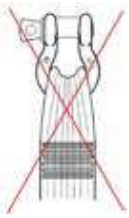

The strap must be used on flat surfaces. In fact, it could become damaged with excessive curvature (example: conventional grills and hooks, etc.).
An optimal contact surface can be calculated as follows: radius of curvature ≥ 0.75 x strap width.

NOTES
All straps have a label sewn inside the slot indicating the length, capacity in various work positions, and marking. Available in other lengths.

Code	Colour	G	L	Working load limit W.L.L (t)				Package (pcs)
						45°		
CTC4108040000	BL Blue	240	4.000	8	16	11,2	6,4	1
CTC4108050000	BL Blue	240	5.000	8	16	11,2	6,4	1
CTC4108060000	BL Blue	240	6.000	8	16	11,2	6,4	1
CTC4108070000	BL Blue	240	7.000	8	16	11,2	6,4	1
CTC4108080000	BL Blue	240	8.000	8	16	11,2	6,4	1
CTC4108100000	BL Blue	240	10.000	8	16	11,2	6,4	1
CTC4110020000	AR Orange	300	2.000	10	20	14	8	1
CTC4110030000	AR Orange	300	3.000	10	20	14	8	1
CTC4110040000	AR Orange	300	4.000	10	20	14	8	1
CTC4110050000	AR Orange	300	5.000	10	20	14	8	1
CTC4110060000	AR Orange	300	6.000	10	20	14	8	1
CTC4110080000	AR Orange	300	8.000	10	20	14	8	1
CTC4110100000	AR Orange	300	10.000	10	20	14	8	1
CTC4110120000	AR Orange	300	12.000	10	20	14	8	1

STANDARD
EN 1492-2

MATERIAL
PES (Polyester)

COLOUR
See table (European standards)

SAFETY FACTOR
7:1

CERTIFICATION
CE marking according to the Machinery Directive 89392 CEE II A

USE
Particularly suitable for slip ring (loop) lifting Reduced wear compared to the flat strap with slots because its entire length can be used.

NOTES
The fibre is protected with anti-abrasion tubular sheathing. All straps have a label sewn inside the protective sheathing indicating the length, capacity in various work positions, and marking.
Available in other lengths.

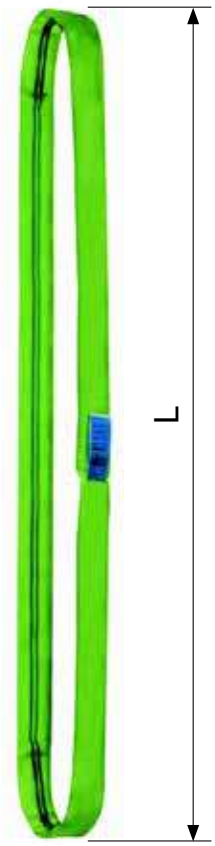

Code	Colour	L	Working load limit W.L.L (t)				Package (pcs)
					45°		
CTC4201010000	VI Purple	500	1	2	1,4	0,8	1
CTC4201020000	VI Purple	1.000	1	2	1,4	0,8	1
CTC4201030000	VI Purple	1.500	1	2	1,4	0,8	1
CTC4201040000	VI Purple	2.000	1	2	1,4	0,8	1
CTC4201050000	VI Purple	2.500	1	2	1,4	0,8	1
CTC4201060000	VI Purple	3.000	1	2	1,4	0,8	1
CTC4201080000	VI Purple	4.000	1	2	1,4	0,8	1
CTC4201100000	VI Purple	5.000	1	2	1,4	0,8	1
CTC4201120000	VI Purple	6.000	1	2	1,4	0,8	1
CTC4201160000	VI Purple	8.000	1	2	1,4	0,8	1
CTC4202010000	VE Green	500	2	4	2,8	1,6	1
CTC4202020000	VE Green	1.000	2	4	2,8	1,6	1
CTC4202030000	VE Green	1.500	2	4	2,8	1,6	1
CTC4202040000	VE Green	2.000	2	4	2,8	1,6	1
CTC4202050000	VE Green	2.500	2	4	2,8	1,6	1
CTC4202060000	VE Green	3.000	2	4	2,8	1,6	1
CTC4202080000	VE Green	4.000	2	4	2,8	1,6	1
CTC4202100000	VE Green	5.000	2	4	2,8	1,6	1
CTC4202120000	VE Green	6.000	2	4	2,8	1,6	1
CTC4202160000	VE Green	8.000	2	4	2,8	1,6	1
CTC4203020000	GI Yellow	1.000	3	6	4,2	2,4	1
CTC4203030000	GI Yellow	1.500	3	6	4,2	2,4	1
CTC4203040000	GI Yellow	2.000	3	6	4,2	2,4	1
CTC4203050000	GI Yellow	2.500	3	6	4,2	2,4	1
CTC4203060000	GI Yellow	3.000	3	6	4,2	2,4	1
CTC4203080000	GI Yellow	4.000	3	6	4,2	2,4	1
CTC4203100000	GI Yellow	5.000	3	6	4,2	2,4	1
CTC4203120000	GI Yellow	6.000	3	6	4,2	2,4	1
CTC4203160000	GI Yellow	8.000	3	6	4,2	2,4	1
CTC4204020000	GR Grey	1.000	4	8	5,6	3,2	1
CTC4204030000	GR Grey	1.500	4	8	5,6	3,2	1

www.gberardi.com - ic@gberardi.com
BERARDI FASTENERS since 1919
18.14

STANDARD
EN 1492-2

MATERIAL
PES (Polyester)

COLOUR
See table (European standards)

SAFETY FACTOR
7:1

CERTIFICATION
CE marking according to the Machinery Directive 89392 CEE II A

USE
Particularly suitable for slip ring (loop) lifting Reduced wear compared to the flat strap with slots because its entire length can be used.

NOTES
The fibre is protected with anti-abrasion tubular sheathing. All straps have a label sewn inside the protective sheathing indicating the length, capacity in various work positions, and marking.
Available in other lengths.

Code	Colour	L	Working load limit W.L.L (t)				Package (pcs)
CTC4204040000	GR Grey	2.000	4	8	5,6	3,2	1
CTC4204050000	GR Grey	2.500	4	8	5,6	3,2	1
CTC4204060000	GR Grey	3.000	4	8	5,6	3,2	1
CTC4204080000	GR Grey	4.000	4	8	5,6	3,2	1
CTC4204100000	GR Grey	5.000	4	8	5,6	3,2	1
CTC4204120000	GR Grey	6.000	4	8	5,6	3,2	1
CTC4204160000	GR Grey	8.000	4	8	5,6	3,2	1
CTC4205020000	RO Red	1.000	5	10	7	4	1
CTC4205030000	RO Red	1.500	5	10	7	4	1
CTC4205040000	RO Red	2.000	5	10	7	4	1
CTC4205050000	RO Red	2.500	5	10	7	4	1
CTC4205060000	RO Red	3.000	5	10	7	4	1
CTC4205080000	RO Red	4.000	5	10	7	4	1
CTC4205100000	RO Red	5.000	5	10	7	4	1
CTC4205120000	RO Red	6.000	5	10	7	4	1
CTC4205160000	RO Red	8.000	5	10	7	4	1
CTC4206020000	MA Brown	1.000	6	12	8,4	4,6	1
CTC4206030000	MA Brown	1.500	6	12	8,4	4,6	1
CTC4206040000	MA Brown	2.000	6	12	8,4	4,6	1
CTC4206050000	MA Brown	2.500	6	12	8,4	4,6	1
CTC4206060000	MA Brown	3.000	6	12	8,4	4,6	1
CTC4206080000	MA Brown	4.000	6	12	8,4	4,6	1
CTC4206100000	MA Brown	5.000	6	12	8,4	4,6	1
CTC4206120000	MA Brown	6.000	6	12	8,4	4,6	1
CTC4206160000	MA Brown	8.000	6	12	8,4	4,6	1
CTC4208020000	BL Blue	1.000	8	16	11,2	6,4	1
CTC4208030000	BL Blue	1.500	8	16	11,2	6,4	1
CTC4208040000	BL Blue	2.000	8	16	11,2	6,4	1
CTC4208050000	BL Blue	2.500	8	16	11,2	6,4	1
CTC4208060000	BL Blue	3.000	8	16	11,2	6,4	1
CTC4208080000	BL Blue	4.000	8	16	11,2	6,4	1

STANDARD
EN 1492-2

MATERIAL
PES (Polyester)

COLOUR
See table (European standards)

SAFETY FACTOR
7:1

CERTIFICATION
CE marking according to the Machinery Directive 89392 CEE II A

USE
Particularly suitable for slip ring (loop) lifting Reduced wear compared to the flat strap with slots because its entire length can be used.

NOTES
The fibre is protected with anti-abrasion tubular sheathing. All straps have a label sewn inside the protective sheathing indicating the length, capacity in various work positions, and marking.
Available in other lengths.

Code	Colour	L	Working load limit W.L.L (t)				Package (pcs)
					45°		
CTC4208100000	BL Blue	5.000	8	16	11,2	6,4	1
CTC4208120000	BL Blue	6.000	8	16	11,2	6,4	1
CTC4208160000	BL Blue	8.000	8	16	11,2	6,4	1
CTC4210020000	AR Orange	1.000	10	20	14	8	1
CTC4210030000	AR Orange	1.500	10	20	14	8	1
CTC4210040000	AR Orange	2.000	10	20	14	8	1
CTC4210050000	AR Orange	2.500	10	20	14	8	1
CTC4210060000	AR Orange	3.000	10	20	14	8	1
CTC4210100000	AR Orange	4.000	10	20	14	8	1
CTC4210100000	AR Orange	5.000	10	20	14	8	1
CTC4210120000	AR Orange	6.000	10	20	14	8	1
CTC4210160000	AR Orange	8.000	10	20	14	8	1

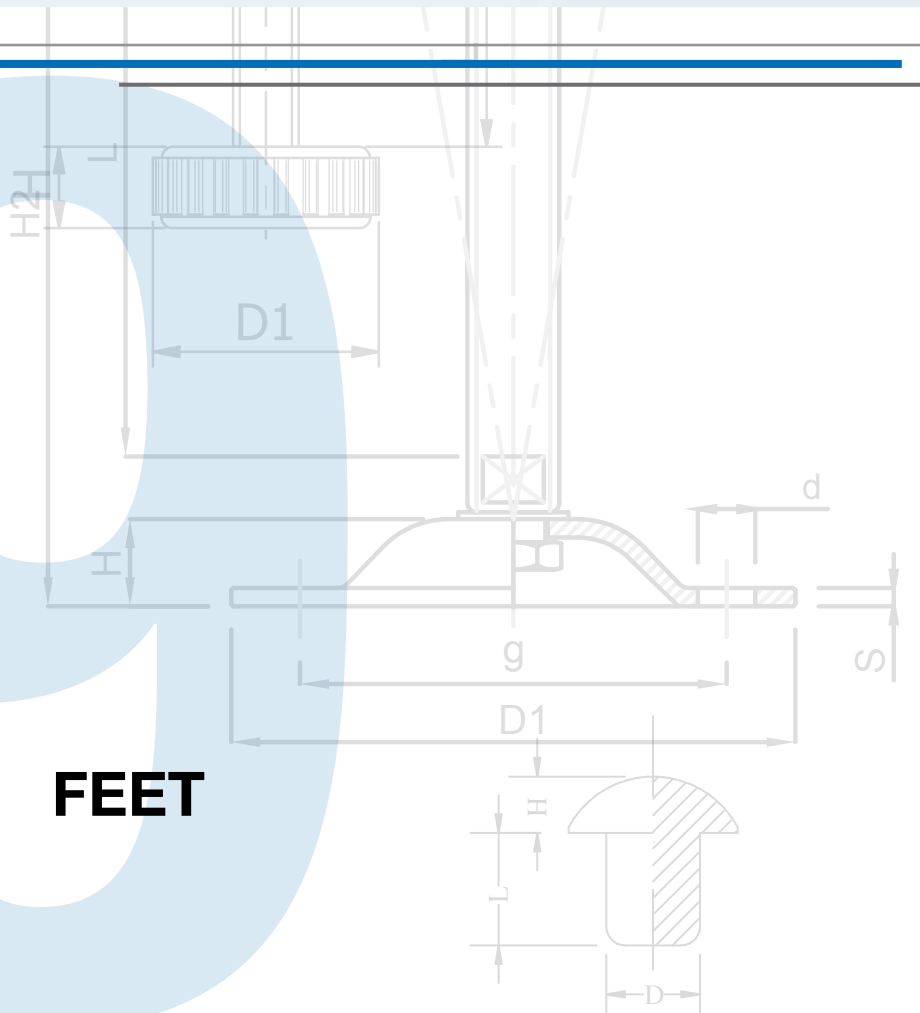

19

FEET

Bumper feet
page 19.1

Fixed base plastic feet
page 19.9

Plastic base articulated feet
page 19.17

Metal base articulated feet
page 19.27

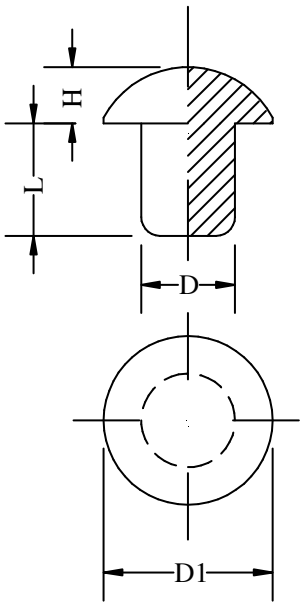

MATERIAL
PVC (Polyvinyl chloride) 55 ShA (±5)

COLOUR
NE Black

NOTES
Also available in white.
Also available in PE (Polyethylene).

Code NE	D1	H	D	L	Package (pcs)
VS015050903N8	9	3	5	6	5.000
VS015091404N8	14	4,5	9	6	5.000
VS015061406N8	14	6,5	6	15	5.000
VS015102008N8	20	8	10	10	5.000

MATERIAL
PVC (Polyvinyl chloride) 55 ShA (±5)

COLOUR
NE Black

NOTES
Also available in white.
Also available in PE (Polyethylene).

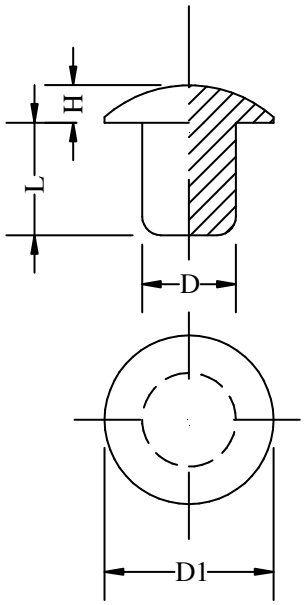

Code NE	D1	H	D	L	Package (pcs)
VS016050903N8	9,5	3	5	6	5.000
VS016061203N8	12	3	6	7,5	5.000
VS016081404N8	14	4	6	15	5.000
VS016081805N8	18	5	8	15	5.000
VS016082005N8	20	5	8	15	5.000
VS016112005N8	24	5	11	13	5.000

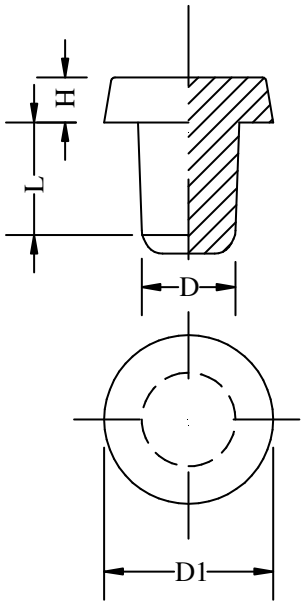

MATERIAL
PVC (Polyvinyl chloride) 55 ShA (±5)

COLOUR
NE Black

NOTES
Also available in white.
Also available in PE (Polyethylene).

Code NE	D1	H	D	L	Package (pcs)
VS017061202N8	12	2,5	6	9	5.000
VS017061203N8	12	3,8	6	9	5.000
VS017030701N8	7	1,5	3,5	5	5.000

MATERIAL
PVC (Polyvinyl chloride) 55 ShA (±5)

COLOUR
(NE) Black

NOTES
Also available in white.
Also available in PE (Polyethylene).

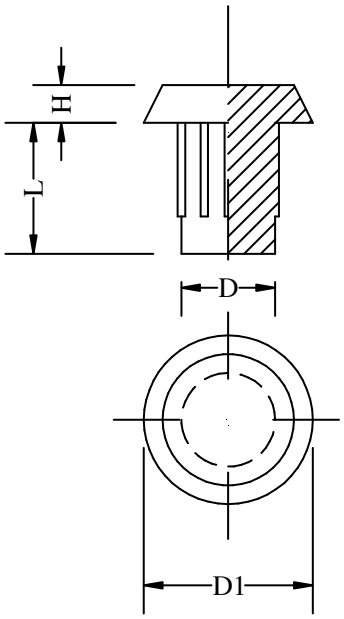

Code (NE)	D1	H	D	L	Package (pcs)
VS018081202N8	12,5	2	8	9	5.000

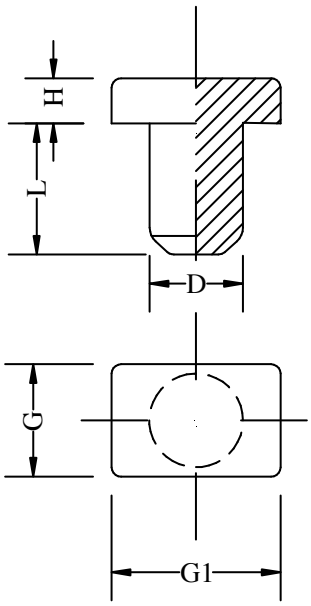

MATERIAL
PVC (Polyvinyl chloride) 55 ShA (±5)

COLOUR
NE Black

NOTES
Also available in white.
Also available in PE (Polyethylene).

Code NE	G	G1	H	D	L	Package (pcs)
VS010E04500N8	10	15	4,5	6	9	5.000
VS010E10000N8	10	15	10	6	9	5.000

MATERIAL
PVC (Polyvinyl chloride) 55 ShA (±5)

COLOUR
(NE) Black

NOTES
Also available in white.

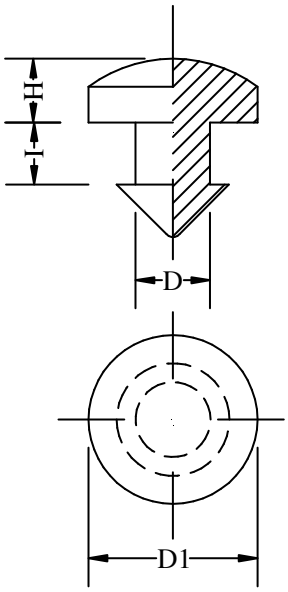

Code (NE)	D1	H	D	I	Package (pcs)
VS003504540N8	12	4	5	4,5	5.000

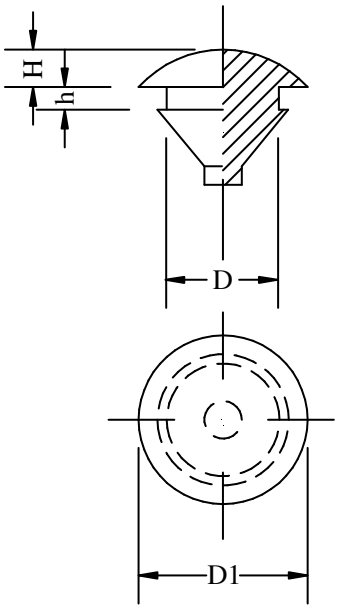

MATERIAL
PVC (Polyvinyl chloride) 55 ShA (±5)

COLOUR
NE Black

NOTES
Also available in white.

Code NE	D1	H	h	D	Package (pcs)
VS014040801N8	8	1,5	1	4	5.000

MATERIAL
PVC (Polyvinyl chloride) 55 ShA (±5)

COLOUR
(NE) Black

NOTES
Also available in white.

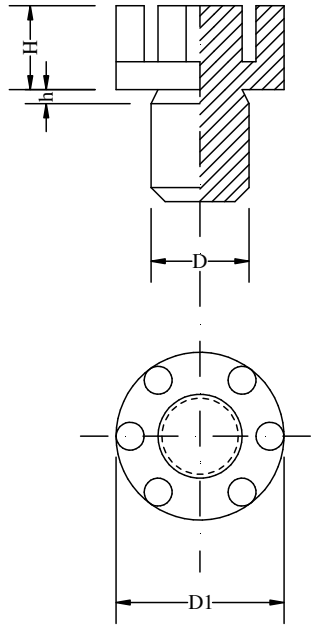

Code (NE)	D1	H	h	D	Package (pcs)
VS015071206N8	12	6	1	7	5.000
VS015071204N8	12	4	1	7	5.000

MATERIAL - SURFACE TREATMENT
Pin: Cl 4.8 (Steel) white galvanized
Base: PE (Polyethylene)

COLOUR
Base: N4 Black RAL 9004

NOTES
Available in other materials, colours, sizes, and even with recessed hex key in the pin head.

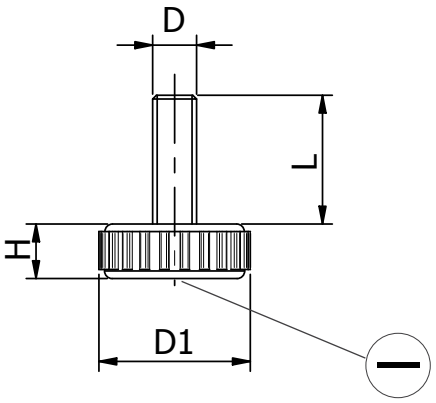

Code N4	D1	H	D	L	Package (pcs)
PD5F4025010T8	25	7	M6	8	500
PD5F4025020T8	25	7	M6	17	500
PD5F4025030T8	25	7	M8	8	500
PD5F4025040T8	25	7	M8	18	500
PD5F4025050T8	25	7	M8	24	500
PD5F4025060T8	25	7	M8	40	500
PD5F4025070T8	25	7	M10	22	250
PD5F4025080T8	25	7	M10	33	250
PD5F4030010T8	30	7	M8	8	500
PD5F4030020T8	30	7	M8	18	500
PD5F4030030T8	30	7	M8	24	500
PD5F4030040T8	30	7	M8	40	400
PD5F4030050T8	30	7	M10	22	250
PD5F4035010T8	35	7	M8	13	250
PD5F4035020T8	35	7	M8	18	400
PD5F4035030T8	35	7	M8	24	400
PD5F4035040T8	35	7	M8	40	250
PD5F4035050T8	35	7	M10	22	300
PD5F4035060T8	35	7	M10	33	250
PD5F4040010T8	40	7	M8	12	250
PD5F4040020T8	40	7	M8	18	250
PD5F4040030T8	40	7	M8	24	250
PD5F4040040T8	40	7	M8	40	250
PD5F4040050T8	40	7	M10	22	250
PD5F4040060T8	40	7	M10	33	250

MATERIAL - SURFACE TREATMENT
Pin: Cl 4.8 (Steel) white galvanized
Base: PE (Polyethylene)

COLOUR
Base: N4 Black RAL 9004

NOTES
Available in other materials, colours, sizes, and even with recessed hex key in the pin head.

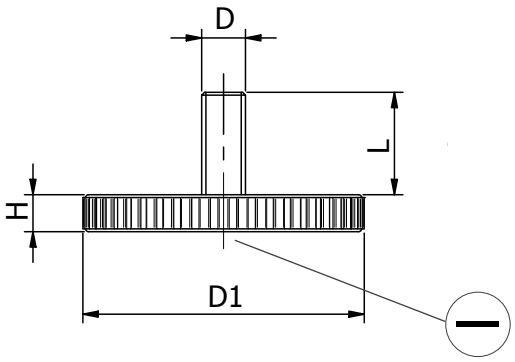

Code N4	D1	H	D	L	Package (pcs)
PD5F5045010T8	45	7	M8	18	250
PD5F5045020T8	45	7	M8	24	250
PD5F5045030T8	45	7	M10	22	250
PD5F5045040T8	45	7	M10	33	250
PD5F5050010T8	50	7	M8	18	250
PD5F5050020T8	50	7	M8	24	250
PD5F5050030T8	50	7	M10	22	250
PD5F5050040T8	50	7	M10	33	250

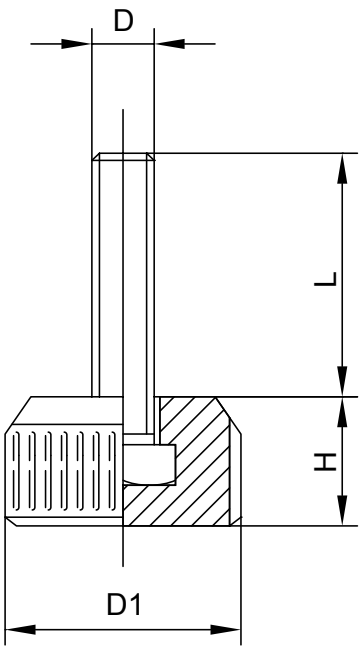

MATERIAL - SURFACE TREATMENT
Pin: Cl 4.8 (Steel) white galvanized
Base: PA (Polyamide)

COLOUR
Base: NE Black

NOTES
Available in other materials, surface treatments, colours.
* 1 DaN (decanewton) = 1.02 Kgf (kilogram-force).

Code NE	D1	H	D	L	Capacity (DaN) *	Package (pcs)
SR0EMPL300815	30	16	M8	15	800	100
SR0EMPL300820	30	16	M8	20	800	100
SR0EMPL300825	30	16	M8	25	800	100
SR0EMPL300830	30	16	M8	30	800	100
SR0EMPL300835	30	16	M8	35	800	100
SR0EMPL300840	30	16	M8	40	800	100
SR0EMPL300850	30	16	M8	50	800	100
SR0EMPL300860	30	16	M8	60	800	100
SR0EMPL301015	30	16	M10	15	1.000	100
SR0EMPL301020	30	16	M10	20	1.000	100
SR0EMPL301025	30	16	M10	25	1.000	100
SR0EMPL301030	30	16	M10	30	1.000	100
SR0EMPL301035	30	16	M10	35	1.000	100
SR0EMPL301040	30	16	M10	40	1.000	100
SR0EMPL301045	30	16	M10	45	1.000	100
SR0EMPL301050	30	16	M10	50	1.000	100
SR0EMPL301215	30	16	M12	15	1.000	100
SR0EMPL301220	30	16	M12	20	1.000	100
SR0EMPL301225	30	16	M12	25	1.000	100
SR0EMPL301230	30	16	M12	30	1.000	100
SR0EMPL301235	30	16	M12	35	1.000	100
SR0EMPL301240	30	16	M12	40	1.000	100
SR0EMPL301250	30	16	M12	50	1.000	100

MATERIAL - SURFACE TREATMENT
Pin: Cl 4.8 (Steel) white galvanized
Base: PA (Polyamide)

COLOUR
Base: NE Black

NOTES
Available in other materials, surface treatments, colours.
* 1 DaN (decanewton) = 1.02 Kgf (kilogram-force).

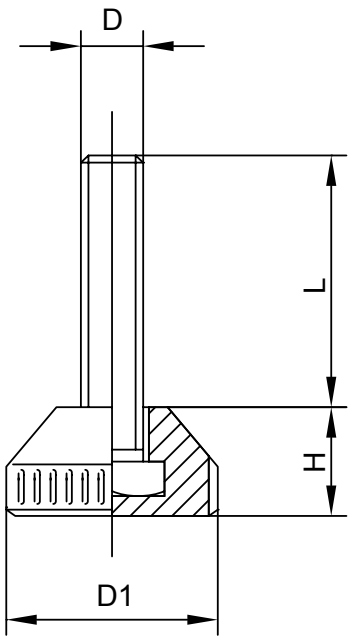

Code NE	D1	H	D	L	Capacity (DaN) *	Package (pcs)
SR0EMPL400820	40	16	M8	20	800	100
SR0EMPL400830	40	16	M8	30	800	100
SR0EMPL400840	40	16	M8	40	800	100
SR0EMPL401020	40	16	M10	20	1.000	100
SR0EMPL401030	40	16	M10	30	1.000	100

MATERIAL - SURFACE TREATMENT
Pin: Cl 4.8 (Steel) white galvanized
Base: PE (Polyethylene)

COLOUR
Base: N4 Black RAL 9004

NOTES
Available in other materials, colours, sizes, and even with recessed hex key in the pin head.

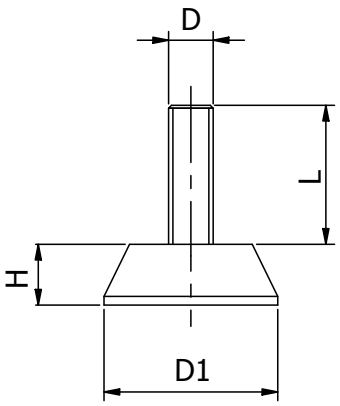

Code N4	D1	H	D	L	Package (pcs)
PD5F0030010T8	30	10,5	M8	18	200
PD5F0030020T8	30	10,5	M8	24	200
PD5F0030030T8	30	10,5	M8	40	200
PD5F0030040T8	30	10,5	M10	22	200
PD5F0030050T8	30	10,5	M10	38	200

MATERIAL - SURFACE TREATMENT
Pin: Cl 4.8 (Steel) white galvanized
Base: PE (Polyethylene)

COLOUR
Base: N4 Black RAL 9004

NOTES
Available in other materials, colours, sizes, and even with recessed hex key in the pin head.

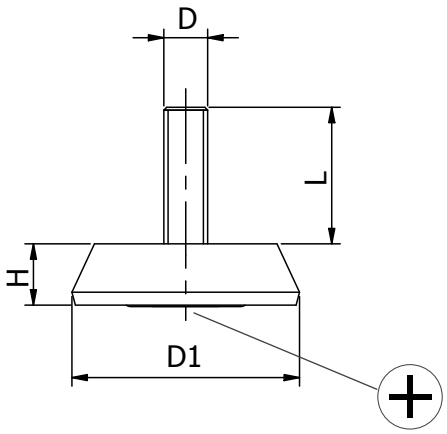

Code N4	D1	H	D	L	Package (pcs)
PD5F1040010T8	40	11	M8	24	250
PD5F1040020T8	40	11	M8	40	200
PD5F1040030T8	40	11	M10	22	250
PD5F1040040T8	40	11	M10	40	200
PD5F1050010T8	50	12	M8	24	200
PD5F1050020T8	50	12	M8	40	150
PD5F1050030T8	50	12	M10	22	150
PD5F1050040T8	50	12	M10	38	150

MATERIAL - SURFACE TREATMENT
Pin: CI 4.8 (Steel) white galvanized
Base: PE (Polyethylene)

COLOUR
Base: N4 Black RAL 9004

NOTES
Available in other materials, colours, sizes, and even with recessed hex key in the pin head.

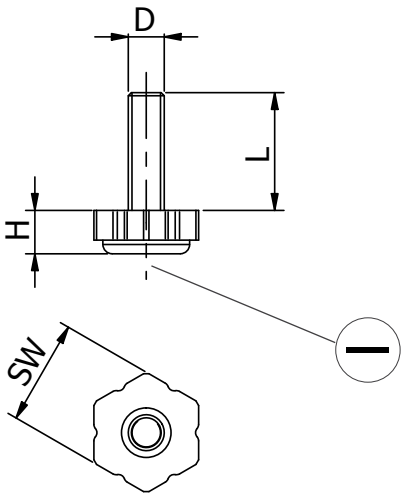

Code N4	SW	H	D	L	Package (pcs)
PD5F2017010T8	17	7	M6	9	500
PD5F2017020T8	17	7	M6	19	500
PD5F2022010T8	22	9	M6	20	500
PD5F2022020T8	22	9	M6	24	500
PD5F2022030T8	22	9	M8	10	500
PD5F2022040T8	22	9	M8	18	500
PD5F2022050T8	22	9	M8	24	500
PD5F2022060T8	22	9	M8	40	400
PD5F2022070T8	22	9	M10	22	250
PD5F2022080T8	22	9	M10	33	250

MATERIAL - SURFACE TREATMENT
Pin: Cl 4.8 (Steel) white galvanized
Base: PE (Polyethylene)

COLOUR
Base: N4 Black RAL 9004

NOTES
Available in other materials, colours, sizes, and even with recessed hex key in the pin head.

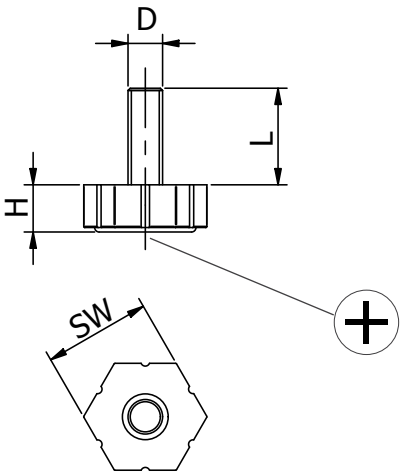

Code N4	SW	H	D	L	Package (pcs)
PD5F3024010T8	24	9	M8	18	500
PD5F3024020T8	24	9	M8	24	500
PD5F3024030T8	24	10,5	M10	22	250
PD5F3024040T8	24	10,5	M10	33	250
PD5F3027010T8	27	9	M8	18	500
PD5F3027020T8	27	9	M8	24	500
PD5F3027030T8	27	10,5	M10	22	250
PD5F3027040T8	27	10,5	M10	33	250
PD5F3030010T8	30	9	M8	18	400
PD5F3030020T8	30	9	M8	24	400
PD5F3030030T8	30	10,5	M10	22	250
PD5F3030040T8	30	10,5	M10	33	250

MATERIAL - SURFACE TREATMENT
Pin: Cl 4.8 (Steel) white galvanized
Base: PA6 (Polyamide)

COLOUR
Base: N4 Black RAL 9004

NOTES
Available in other materials, colours, and sizes.

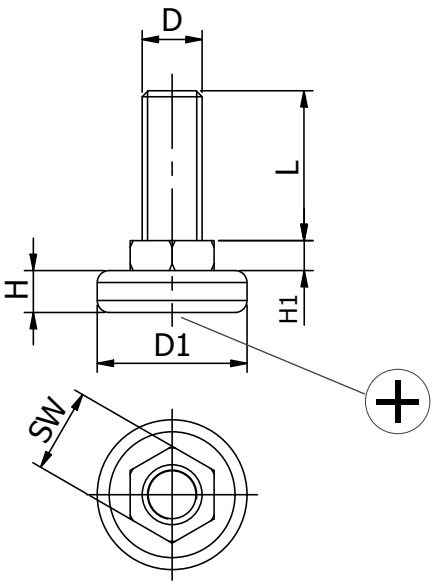

Code N4	D1	H	D	L	SW	H1	Package (pcs)
PD5S0025010T8	25	7	M8	20	13	5	200
PD5S0025020T8	25	7	M8	40	13	5	100
PD5S0025030T8	25	7	M10	25	14	5	200
PD5S0025040T8	25	7	M10	40	14	5	200
PD5S0025050T8	25	7	M10	40	17	5,5	100
PD5S0025060T8	25	7	M10	60	14	5	100
PD5S0025070T8	25	7	M10	70	14	5	100
PD5S0025080T8	25	7	M10	100	14	5	100

MATERIAL - SURFACE TREATMENT
Pin: Cl 4.8 (Steel) white galvanized
Base: PA6 (Polyamide)

COLOUR
Base: N4 Black RAL 9004

NOTES
Available in other materials, colours, and sizes.

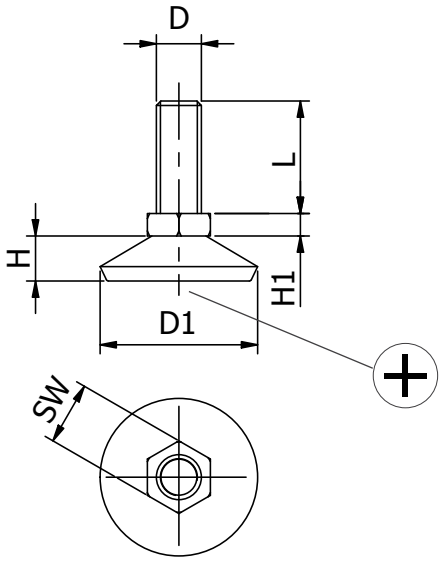

Code N4	D1	H	D	L	SW	H1	Package (pcs)
PD5S1035010T8	35	10	M8	20	13	5	200
PD5S1035020T8	35	10	M8	40	13	5	200
PD5S1035030T8	35	10	M10	25	14	5	200
PD5S1035040T8	35	10	M10	40	14	5	200
PD5S1035050T8	35	10	M10	60	14	5	200
PD5S1035060T8	35	10	M10	70	14	5	100
PD5S1035070T8	35	10	M10	100	14	5	100
PD5S1040010T8	40	12	M8	20	13	5	200
PD5S1040020T8	40	12	M8	40	13	5	200
PD5S1040030T8	40	12	M10	25	14	5	200
PD5S1040040T8	40	12	M10	40	14	5	200
PD5S1040050T8	40	12	M10	40	17	5,5	200
PD5S1040060T8	40	12	M10	60	14	5	100
PD5S1040070T8	40	12	M10	70	14	5	100
PD5S1040080T8	40	12	M10	100	14	5	100
PD5S1050010T8	50	12	M8	20	13	5	100
PD5S1050020T8	50	12	M8	40	13	5	100
PD5S1050030T8	50	12	M10	25	14	5	100
PD5S1050040T8	50	12	M10	40	14	5	100
PD5S1050050T8	50	12	M10	40	17	5,5	100
PD5S1050060T8	50	12	M10	60	14	5	100
PD5S1050070T8	50	12	M10	70	14	5	100
PD5S1050080T8	50	12	M10	100	14	5	100

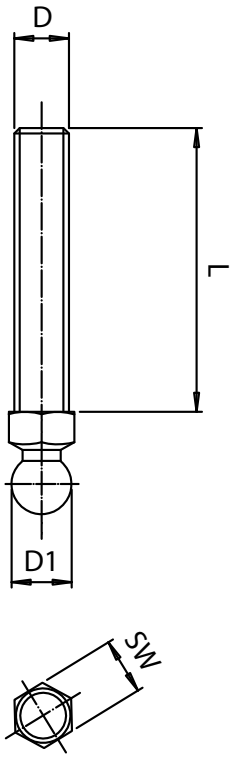

MATERIAL - SURFACE TREATMENT
Cl 4.8 (Steel) white galvanized
AISI303 (Stainless steel)

NOTES
Available in other materials, surface treatments.

ACCESSORIES
Can be assembled to bases TBPL and TSLP.

Code Cl 4.8 white galvanized	Code AISI303	D	L	SW	D1	Package (pcs)
SRPPSZ1408045	**SRPPSX1408045**	M8	45	14	13,8	50
SRPPSZ1408070	**SRPPSX1408070**	M8	70	14	13,8	50
SRPPSZ1410045	**SRPPSX1410045**	M10	45	14	13,8	50
SRPPSZ1410070	**SRPPSX1410070**	M10	70	14	13,8	50
SRPPSZ1410100	**SRPPSX1410100**	M10	100	14	13,8	25
SRPPSZ1412045	**SRPPSX1412045**	M12	45	14	13,8	50
SRPPSZ1412070	**SRPPSX1412070**	M12	70	14	13,8	50
SRPPSZ1412100	**SRPPSX1412100**	M12	100	14	13,8	25
SRPPSZ1412125	**SRPPSX1412125**	M12	125	14	13,8	25
SRPPSZ1414075	**SRPPSX1414075**	M14	75	16	13,8	25
SRPPSZ1414125	**SRPPSX1414125**	M14	125	16	13,8	25
SRPPSZ1416060	**SRPPSX1416060**	M16	60	16	13,8	25
SRPPSZ1416110	**SRPPSX1416110**	M16	110	16	13,8	25
SRPPSZ1416145	**SRPPSX1416145**	M16	145	16	13,8	25
SRPPSZ1416175	**SRPPSX1416175**	M16	175	16	13,8	10
SRPPSZ1916060	**SRPPSX1916060**	M16	60	16	18,8	25
SRPPSZ1916110	**SRPPSX1916110**	M16	110	20	18,8	25
SRPPSZ1916145	**SRPPSX1916145**	M16	145	20	18,8	25
SRPPSZ1916175	**SRPPSX1916175**	M16	175	20	18,8	10
SRPPSZ1920075	**SRPPSX1920075**	M20	75	20	18,8	10
SRPPSZ1920110	**SRPPSX1920110**	M20	110	20	18,8	10
SRPPSZ1920145	**SRPPSX1920145**	M20	145	20	18,8	10
SRPPSZ1920195	**SRPPSX1920195**	M20	195	20	18,8	10
SRPPSZ1924085	**SRPPSX1924085**	M24	85	20	18,8	10
SRPPSZ1924115	**SRPPSX1924115**	M24	115	24	18,8	10
SRPPSZ1924145	**SRPPSX1924145**	M24	145	24	18,8	10
SRPPSZ1924195	**SRPPSX1924195**	M24	195	24	18,8	10

MATERIAL
PA (Polyamide)

COLOUR
NE Black

NOTES
Available in other materials, colours.

ACCESSORIES
Can be assembled to pin ES and slip-guard TPLP.

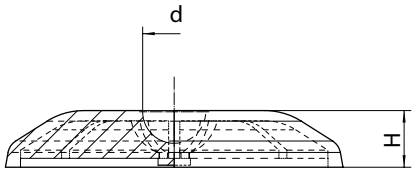

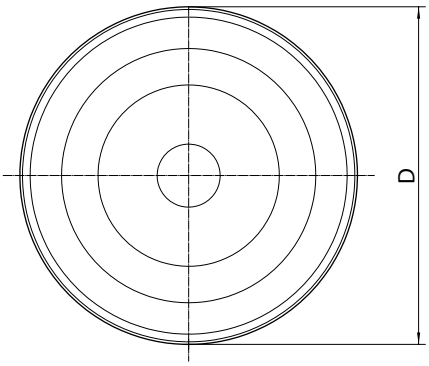

Code NE	D	H	d	Package (pcs)
SREMBPS002514	25	12	13,8	100
SREMBPS004014	40	13	13,8	100
SREMBPS005014	50	14	13,8	100
SREMBPS006014	60	16,5	13,8	100
SREMBPS006019	60	16,5	18,8	100
SREMBPS008014	80	16,5	13,8	50
SREMBPS008019	80	16,5	18,8	50
SREMBPS010014	100	17	13,8	50
SREMBPS010019	100	17	18,8	50
SREMBPS012514	125	20	13,8	50
SREMBPS012519	125	20	18,8	50

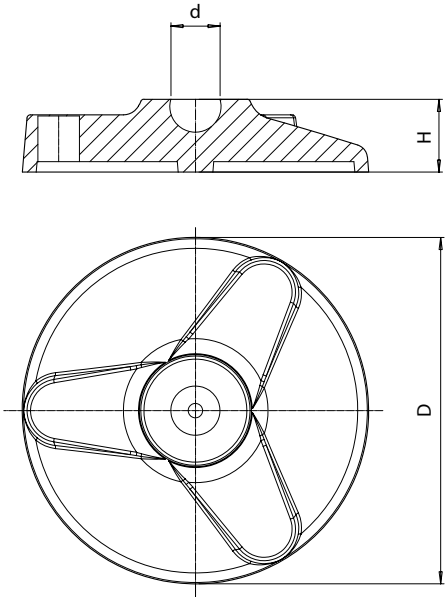

MATERIAL
PA (Polyamide)

COLOUR
NE Black

NOTES
Available in other materials, colours.

ACCESSORIES
Can be assembled to pin ES and slip-guard TPLP.

Code NE	D	H	d	Package (pcs)
SREMBPS108014	80	16,5	13,8	50
SREMBPS108019	80	16,5	18,8	50
SREMBPS110014	100	21	13,8	50
SREMBPS110019	100	21	18,8	50
SREMBPS112514	125	25	13,8	50
SREMBPS112519	125	25	18,8	50

MATERIAL
TPV (Vulcanized elastomer) 80 ShA (±5)

COLOUR
(NE) Black

NOTES
Available in other materials, hardnesses, and colours.

ACCESSORIES
Can be assembled to bases TBLP and TSLP.

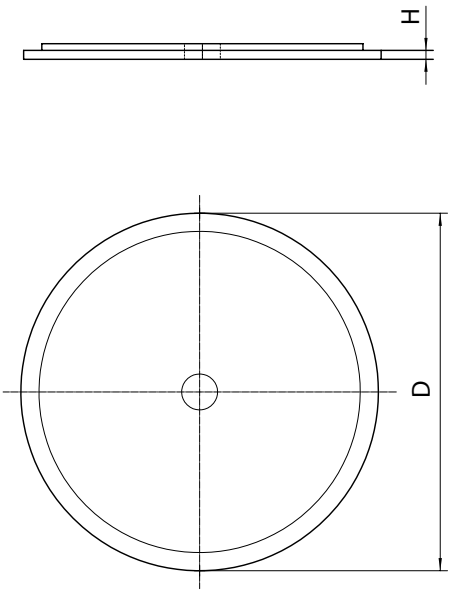

Code (NE)	D	H	Package (pcs)
SREMGA0400000	40	2,5	100
SREMGA0500000	50	2,5	100
SREMGA0600000	60	2,5	100
SREMGA0800000	80	2,5	50
SREMGA1000000	100	2,5	50
SREMGA1250000	125	3,5	50

MATERIAL - SURFACE TREATMENT
Pin: AC (Steel) galvanized white
Base: PA6-CV30% (Glass-filled polyamide)
Slip-guard: NBR (Nitrile rubber) 70 ShA (±5)

COLOUR
Base: NE Black
Slip-guard: NE Black

CERTIFICATION
RoHS
REACH

NOTES
Available in other materials, surface treatments, colours.
"D" location always closed buy can be perforated if you wish to attach the foot base to something.
* 1 DaN (decanewton) = 1.02 Kgf (kilogram-force).

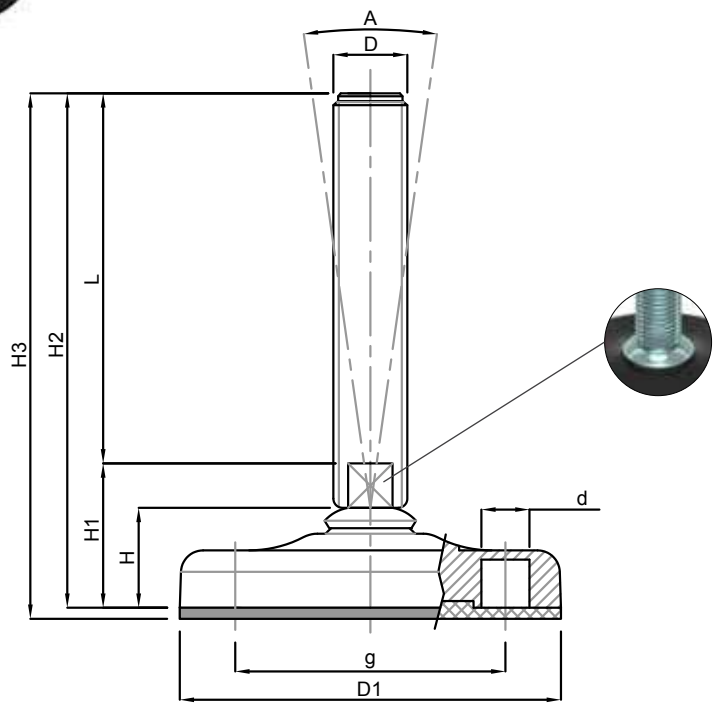

Code without slip-guard	Code with slip-guard	D1	H	D	L	SW1	H1	H2	H3	g	d	A	Static load (DaN) *	Package (pcs)
PD5S2083010N8	**PD5S2083017N8**	83	25	M12	50	10	35	85	88	54	8,5	16°	1.400	1
PD5S2083020N8	**PD5S2083027N8**	83	25	M12	100	10	35	135	138	54	8,5	16°	1.400	1
PD5S2083030N8	**PD5S2083037N8**	83	25	M12	150	10	35	185	188	54	8,5	16°	1.400	1
PD5S2083040N8	**PD5S2083047N8**	83	25	M16	100	13	35	135	138	54	8,5	16°	2.000	1
PD5S2083050N8	**PD5S2083057N8**	83	25	M16	150	13	35	185	188	54	8,5	16°	2.000	1
PD5S2083060N8	**PD5S2083067N8**	83	25	M16	200	13	35	235	238	54	8,5	16°	2.000	1
PD5S2083070N8	**PD5S2083077N8**	83	25	M20	100	17	37	137	140	54	8,5	16°	2.000	1
PD5S2083080N8	**PD5S2083087N8**	83	25	M20	150	17	37	187	190	54	8,5	16°	2.000	1
PD5S2083090N8	**PD5S2083097N8**	83	25	M20	200	17	37	237	240	54	8,5	16°	2.000	1
PD5S2083100N8	**PD5S2083107N8**	83	25	M20	250	17	37	287	290	54	8,5	16°	2.000	1
PD5S2083110N8	**PD5S2083117N8**	83	25	M24	100	20	37	137	140	54	8,5	16°	2.000	1
PD5S2083120N8	**PD5S2083127N8**	83	25	M24	150	20	37	187	190	54	8,5	16°	2.000	1
PD5S2083140N8	**PD5S2083147N8**	83	25	M24	200	20	37	237	240	54	8,5	16°	2.000	1
PD5S2083160N8	**PD5S2083167N8**	83	25	M24	250	20	37	287	290	54	8,5	16°	2.000	1
PD5S2103010N8	**PD5S2103017N8**	103	26	M16	100	13	36	136	139	73	12,5	16°	3.000	1
PD5S2103020N8	**PD5S2103027N8**	103	26	M16	150	13	36	186	189	73	12,5	16°	3.000	1
PD5S2103030N8	**PD5S2103037N8**	103	26	M16	200	13	36	236	239	73	12,5	16°	3.000	1
PD5S2103040N8	**PD5S2103047N8**	103	26	M20	100	17	36	136	139	73	12,5	16°	3.000	1
PD5S2103050N8	**PD5S2103057N8**	103	26	M20	150	17	36	186	189	73	12,5	16°	3.000	1
PD5S2103060N8	**PD5S2103067N8**	103	26	M20	200	17	36	236	239	73	12,5	16°	3.000	1
PD5S2103070N8	**PD5S2103077N8**	103	26	M20	250	17	36	286	289	73	12,5	16°	3.000	1
PD5S2103080N8	**PD5S2103087N8**	103	26	M24	100	20	36	136	139	73	12,5	16°	3.000	1
PD5S2103090N8	**PD5S2103097N8**	103	26	M24	150	20	36	186	189	73	12,5	16°	3.000	1

MATERIAL - SURFACE TREATMENT
Pin: AC (Steel) galvanized white
Base: PA6-CV30% (Glass-filled polyamide)
Slip-guard: NBR (Nitrile rubber) 70 ShA (±5)

COLOUR
Base: NE Black
Slip-guard: NE Black

CERTIFICATION
RoHS
REACH

NOTES
Available in other materials, surface treatments, colours.
"D" location always closed buy can be perforated if you wish to attach the foot base to something.
* 1 DaN (decanewton) = 1.02 Kgf (kilogram-force).

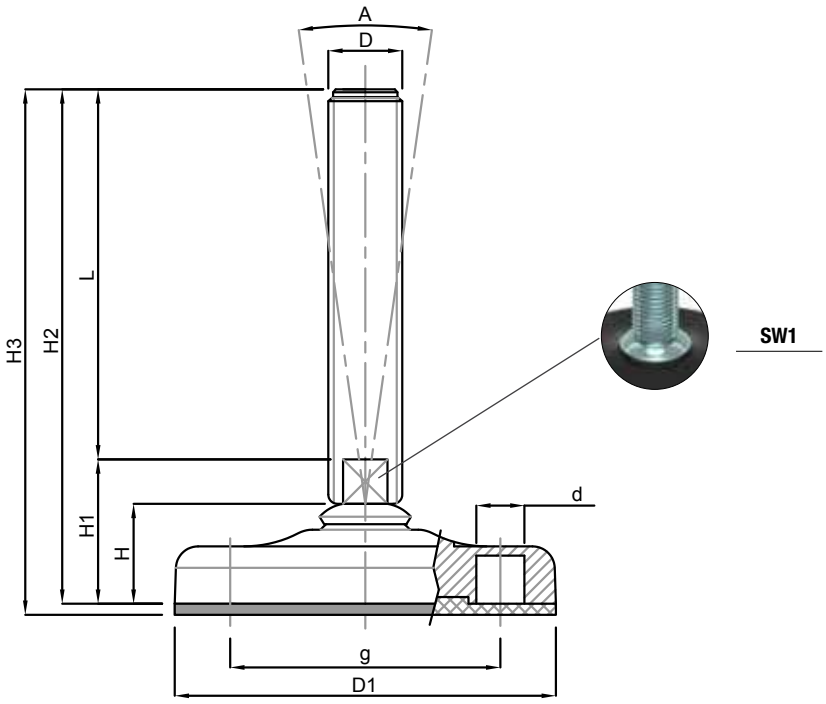

Code without slip-guard	Code with slip-guard	D1	H	D	L	SW1	H1	H2	H3	g	d	A	Static load (DaN) *	Package (pcs)
PD5S2103110N8	**PD5S2103117N8**	103	26	M24	200	20	36	236	239	73	12,5	16°	3.000	1
PD5S2103130N8	**PD5S2103137N8**	103	26	M24	250	20	36	286	289	73	12,5	16°	3.000	1
PD5S2123010N8	**PD5S2123017N8**	123	29	M16	100	13	39	139	143	87	12,5	16°	3.500	1
PD5S2123020N8	**PD5S2123027N8**	123	29	M16	150	13	39	189	193	87	12,5	16°	3.500	1
PD5S2123030N8	**PD5S2123037N8**	123	29	M16	200	13	39	239	243	87	12,5	16°	3.500	1
PD5S2123040N8	**PD5S2123047N8**	123	29	M20	100	17	41	141	145	87	12,5	16°	3.500	1
PD5S2123050N8	**PD5S2123057N8**	123	29	M20	150	17	41	191	195	87	12,5	16°	3.500	1
PD5S2123060N8	**PD5S2123067N8**	123	29	M20	200	17	41	241	245	87	12,5	16°	3.500	1
PD5S2123070N8	**PD5S2123077N8**	123	29	M20	250	17	41	291	295	87	12,5	16°	3.500	1
PD5S2123080N8	**PD5S2123087N8**	123	29	M24	100	20	41	141	145	87	12,5	16°	3.500	1
PD5S2123090N8	**PD5S2123097N8**	123	29	M24	150	20	41	191	195	87	12,5	16°	3.500	1
PD5S2123110N8	**PD5S2123117N8**	123	29	M24	200	20	41	241	245	87	12,5	16°	3.500	1
PD5S2123130N8	**PD5S2123137N8**	123	29	M24	250	20	41	291	295	87	12,5	16°	3.500	1
PD5S2123140N8	**PD5S2123147N8**	123	29	M30	100	26	41	141	145	87	12,5	16°	3.500	1
PD5S2123150N8	**PD5S2123157N8**	123	29	M30	150	26	41	191	195	87	12,5	16°	3.500	1
PD5S2123170N8	**PD5S2123177N8**	123	29	M30	200	26	41	241	245	87	12,5	16°	3.500	1
PD5S2123190N8	**PD5S2123197N8**	123	29	M30	250	26	41	291	295	87	12,5	16°	3.500	1

ARTICULATED FOOT TRLP
stainless steel

MATERIAL
Pin: AISI304 (Stainless steel)
Base: PA6-CV30% (Glass-filled polyamide)
Slip-guard: NBR (Nitrile rubber) 70 ShA (±5)

COLOUR
Base: NE Black
Slip-guard: NE Black

CERTIFICATION
RoHS
REACH
FDA (only slip-guard)

NOTES
Available in other materials, surface treatments, colours.
"D" location always closed but can be perforated if you wish to attach the foot base to something.
* 1 DaN (decanewton) = 1.02 Kgf (kilogram-force).

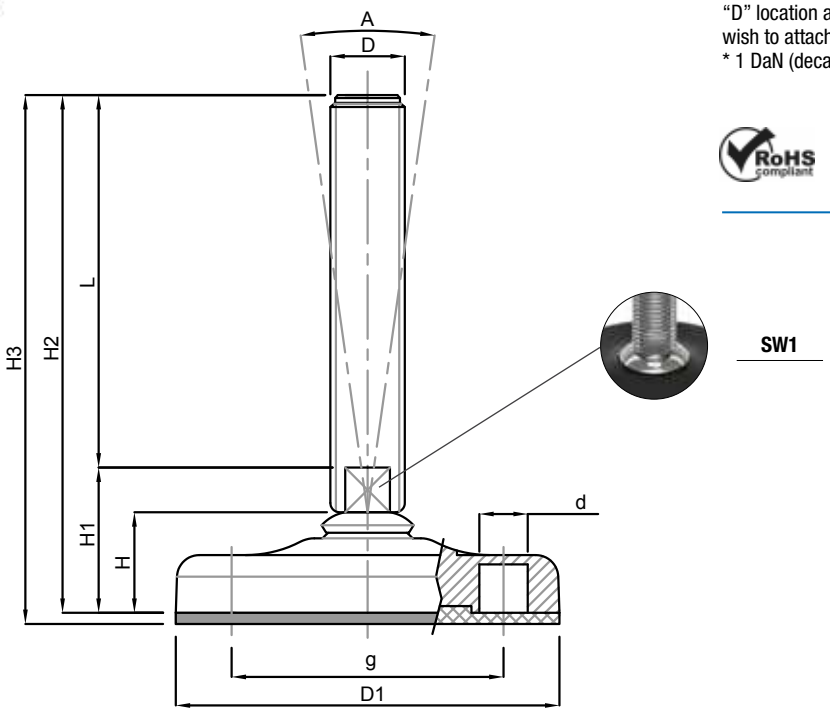

Code without slip-guard	Code with slip-guard	D1	H	D	L	SW1	H1	H2	H3	g	d	A	Static load (DaN) *	Package (pcs)
PD6S2083010N8	PD6S2083017N8	83	25	M12	50	10	35	85	88	54	8,5	16°	1.400	1
PD6S2083020N8	PD6S2083027N8	83	25	M12	100	10	35	135	138	54	8,5	16°	1.400	1
PD6S2083030N8	PD6S2083037N8	83	25	M12	150	10	35	185	188	54	8,5	16°	1.400	1
PD6S2083040N8	PD6S2083047N8	83	25	M16	100	13	35	135	138	54	8,5	16°	2.000	1
PD6S2083050N8	PD6S2083057N8	83	25	M16	150	13	35	185	188	54	8,5	16°	2.000	1
PD6S2083060N8	PD6S2083067N8	83	25	M16	200	13	35	235	238	54	8,5	16°	2.000	1
PD6S2083070N8	PD6S2083077N8	83	25	M20	100	17	37	137	140	54	8,5	16°	2.000	1
PD6S2083080N8	PD6S2083087N8	83	25	M20	150	17	37	187	190	54	8,5	16°	2.000	1
PD6S2083090N8	PD6S2083097N8	83	25	M20	200	17	37	237	240	54	8,5	16°	2.000	1
PD6S2083100N8	PD6S2083107N8	83	25	M20	250	17	37	287	290	54	8,5	16°	2.000	1
PD6S2083110N8	PD6S2083117N8	83	25	M24	100	20	37	137	140	54	8,5	16°	2.000	1
PD6S2083120N8	PD6S2083127N8	83	25	M24	150	20	37	187	190	54	8,5	16°	2.000	1
PD6S2083140N8	PD6S2083147N8	83	25	M24	200	20	37	237	240	54	8,5	16°	2.000	1
PD6S2083160N8	PD6S2083167N8	83	25	M24	250	20	37	287	290	54	8,5	16°	2.000	1
PD6S2103010N8	PD6S2103017N8	103	26	M16	100	13	36	136	139	73	12,5	16°	3.000	1
PD6S2103020N8	PD6S2103027N8	103	26	M16	150	13	36	186	189	73	12,5	16°	3.000	1
PD6S2103030N8	PD6S2103037N8	103	26	M16	200	13	36	236	239	73	12,5	16°	3.000	1
PD6S2103040N8	PD6S2103047N8	103	26	M20	100	17	36	136	139	73	12,5	16°	3.000	1
PD6S2103050N8	PD6S2103057N8	103	26	M20	150	17	36	186	189	73	12,5	16°	3.000	1
PD6S2103060N8	PD6S2103067N8	103	26	M20	200	17	36	236	239	73	12,5	16°	3.000	1
PD6S2103070N8	PD6S2103077N8	103	26	M20	250	17	36	286	289	73	12,5	16°	3.000	1
PD6S2103080N8	PD6S2103087N8	103	26	M24	100	20	36	136	139	73	12,5	16°	3.000	1
PD6S2103090N8	PD6S2103097N8	103	26	M24	150	20	36	186	189	73	12,5	16°	3.000	1

MATERIAL
Pin: AISI304 (Stainless steel)
Base: PA6-CV30% (Glass-filled polyamide)
Slip-guard: NBR (Nitrile rubber) 70 ShA (±5)

COLOUR
Base: NE Black
Slip-guard: NE Black

CERTIFICATION
RoHS
REACH
FDA (only slip-guard)

NOTES
Available in other materials, surface treatments, colours.
"D" location always closed but can be perforated if you wish to attach the foot base to something.
* 1 DaN (decanewton) = 1.02 Kgf (kilogram-force).

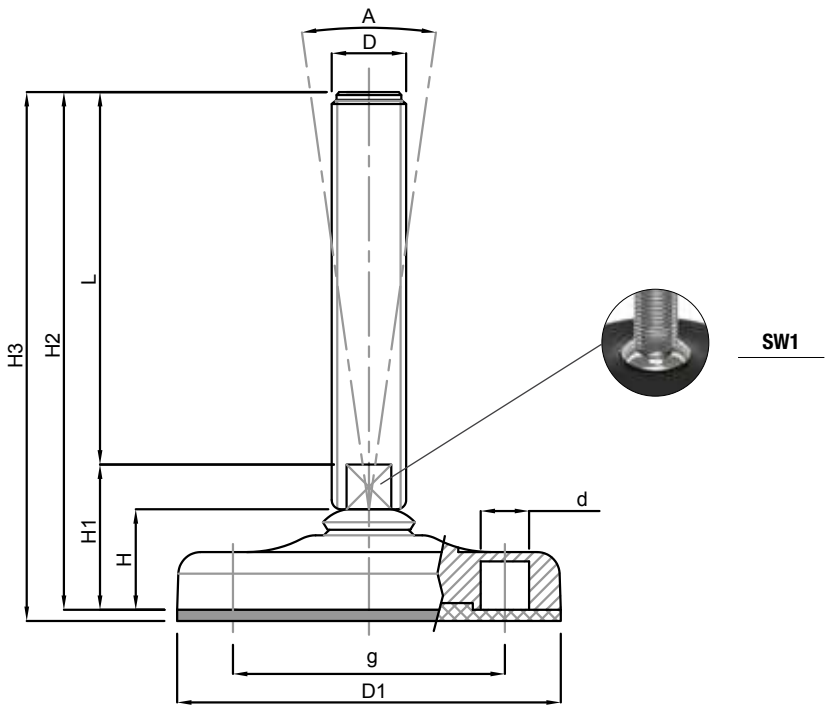

Code without slip-guard	Code with slip-guard	D1	H	D	L	SW1	H1	H2	H3	g	d	A	Static load (DaN) *	Package (pcs)
PD6S2103110N8	**PD6S2103117N8**	103	26	M24	200	20	36	236	239	73	12,5	16°	3.000	1
PD6S2103130N8	**PD6S2103137N8**	103	26	M24	250	20	36	286	289	73	12,5	16°	3.000	1
PD6S2123010N8	**PD6S2123017N8**	123	29	M16	100	13	39	139	143	87	12,5	16°	3.500	1
PD6S2123020N8	**PD6S2123027N8**	123	29	M16	150	13	39	189	193	87	12,5	16°	3.500	1
PD6S2123030N8	**PD6S2123037N8**	123	29	M16	200	13	39	239	243	87	12,5	16°	3.500	1
PD6S2123040N8	**PD6S2123047N8**	123	29	M20	100	17	41	141	145	87	12,5	16°	3.500	1
PD6S2123050N8	**PD6S2123057N8**	123	29	M20	150	17	41	191	195	87	12,5	16°	3.500	1
PD6S2123060N8	**PD6S2123067N8**	123	29	M20	200	17	41	241	245	87	12,5	16°	3.500	1
PD6S2123070N8	**PD6S2123077N8**	123	29	M20	250	17	41	291	295	87	12,5	16°	3.500	1
PD6S2123080N8	**PD6S2123087N8**	123	29	M24	100	20	41	141	145	87	12,5	16°	3.500	1
PD6S2123090N8	**PD6S2123097N8**	123	29	M24	150	20	41	191	195	87	12,5	16°	3.500	1
PD6S2123110N8	**PD6S2123117N8**	123	29	M24	200	20	41	241	245	87	12,5	16°	3.500	1
PD6S2123130N8	**PD6S2123137N8**	123	29	M24	250	20	41	291	295	87	12,5	16°	3.500	1
PD6S2123140N8	**PD6S2123147N8**	123	29	M30	100	26	41	141	145	87	12,5	16°	3.500	1
PD6S2123150N8	**PD6S2123157N8**	123	29	M30	150	26	41	191	195	87	12,5	16°	3.500	1
PD6S2123170N8	**PD6S2123177N8**	123	29	M30	200	26	41	241	245	87	12,5	16°	3.500	1
PD6S2123190N8	**PD6S2123197N8**	123	29	M30	250	26	41	291	295	87	12,5	16°	3.500	1

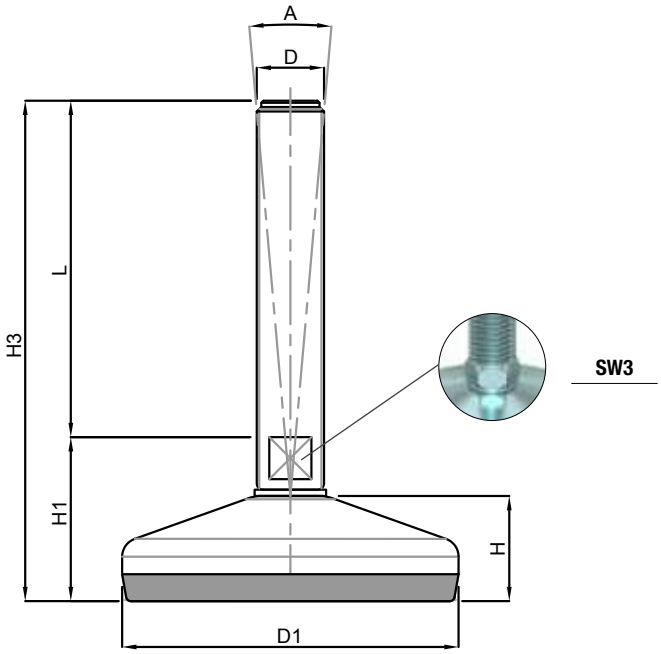

MATERIAL - SURFACE TREATMENT
Pin: AC (Steel) galvanized white
Base: C40 (Steel) galvanized white
Slip-guard: NBR (Nitrile rubber) 80 ShA (±5)

COLOUR
Slip-guard: NE Black

CERTIFICATION
RoHS
REACH

NOTES
Available in other materials, surface treatments, colours.
* 1 DaN (decanewton) = 1.02 Kgf (kilogram-force).

Code	D1	H	D	L	SW3	H1	H3	A	Static load (DaN) *	Package (pcs)
PD5S308001801	80	25	M10	50	14	35	85	10°	1.000	1
PD5S308003801	80	25	M10	100	14	35	135	10°	1.000	1
PD5S308005801	80	25	M12	50	14	35	85	10°	1.000	1
PD5S308007801	80	25	M12	100	14	35	135	10°	1.000	1
PD5S308009801	80	25	M12	150	14	35	185	10°	1.000	1
PD5S308010801	80	25	M14	50	14	35	85	10°	1.000	1
PD5S308012801	80	25	M14	100	14	35	135	10°	1.000	1
PD5S308014801	80	25	M14	150	14	35	185	10°	1.000	1
PD5S308017801	80	25	M16	75	16	35	110	10°	1.000	1
PD5S308019801	80	25	M16	100	16	35	135	10°	1.000	1
PD5S308022801	80	25	M16	150	16	35	185	10°	1.000	1
PD5S308026801	80	25	M20	75	20	36	111	10°	1.000	1
PD5S308028801	80	25	M20	100	20	36	136	10°	1.000	1
PD5S308031801	80	25	M20	150	20	36	186	10°	1.000	1
PD5S308034801	80	25	M20	200	20	36	236	10°	1.000	1
PD5S308038801	80	25	M24	75	24	36	111	10°	1.000	1
PD5S308040801	80	25	M24	100	24	36	136	10°	1.000	1
PD5S308044801	80	25	M24	150	24	36	186	10°	1.000	1
PD5S308048801	80	25	M24	200	24	36	236	10°	1.000	1
PD5S310002801	100	28	M16	75	16	37,5	112,5	10°	1.500	1
PD5S310004801	100	28	M16	100	16	37,5	137,5	10°	1.500	1
PD5S310007801	100	28	M16	150	16	37,5	187,5	10°	1.500	1
PD5S310010801	100	28	M16	200	16	37,5	237,5	10°	1.500	1
PD5S310012801	100	28	M20	75	20	38,5	113,5	10°	1.500	1
PD5S310014801	100	28	M20	100	20	38,5	138,5	10°	1.500	1
PD5S310017801	100	28	M20	150	20	38,5	188,5	10°	1.500	1
PD5S310020801	100	28	M20	200	20	38,5	238,5	10°	1.500	1
PD5S310023801	100	28	M20	250	20	38,5	288,5	10°	1.500	1
PD5S310025801	100	28	M24	100	24	38,5	138,5	10°	1.500	1
PD5S310029801	100	28	M24	150	24	38,5	188,5	10°	1.500	1
PD5S310034801	100	28	M24	200	24	38,5	238,5	10°	1.500	1
PD5S310038801	100	28	M24	250	24	38,5	288,5	10°	1.500	1
PD5S310040801	100	28	M30	100	30	39,5	139,5	10°	1.500	1
PD5S310044801	100	28	M30	150	30	39,5	189,5	10°	1.500	1
PD5S310049801	100	28	M30	200	30	39,5	239,5	10°	1.500	1

MATERIAL - SURFACE TREATMENT
Pin: AC (Steel) galvanized white
Base: C40 (Steel) galvanized white
Slip-guard: NBR (Nitrile rubber) 80 ShA (±5)

COLOUR
Slip-guard: NE Black

CERTIFICATION
RoHS
REACH

NOTES
Available in other materials, surface treatments, colours.
* 1 DaN (decanewton) = 1.02 Kgf (kilogram-force).

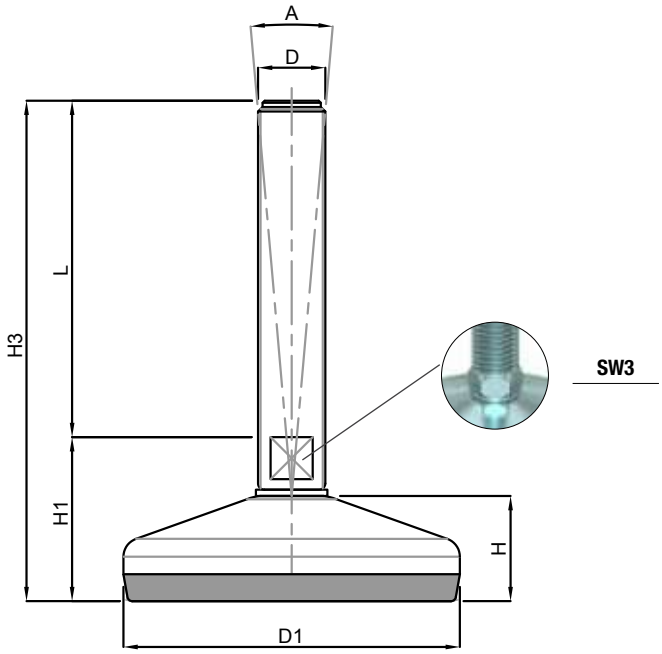

Code	D1	H	D	L	SW3	H1	H3	A	Static load (DaN) *	Package (pcs)
PD5S310053801	100	28	M30	250	30	39,5	289,5	10°	1.500	1
PD5S312002801	120	32	M16	75	16	41,5	116,5	10°	3.000	1
PD5S312004801	120	32	M16	100	16	41,5	141,5	10°	3.000	1
PD5S312007801	120	32	M16	150	16	41,5	191,5	10°	3.000	1
PD5S312010801	120	32	M16	200	16	41,5	241,5	10°	3.000	1
PD5S312012801	120	32	M20	75	20	42,5	117,5	10°	3.000	1
PD5S312014801	120	32	M20	100	20	42,5	142,5	10°	3.000	1
PD5S312017801	120	32	M20	150	20	42,5	192,5	10°	3.000	1
PD5S312020801	120	32	M20	200	20	42,5	242,5	10°	3.000	1
PD5S312023801	120	32	M20	250	20	42,5	292,5	10°	3.000	1
PD5S312025801	120	32	M24	100	24	42,5	142,5	10°	3.000	1
PD5S312029801	120	32	M24	150	24	42,5	192,5	10°	3.000	1
PD5S312034801	120	32	M24	200	24	42,5	242,5	10°	3.000	1
PD5S312038801	120	32	M24	250	24	42,5	292,5	10°	3.000	1
PD5S312040801	120	32	M30	100	30	43,5	143,5	10°	3.000	1
PD5S312044801	120	32	M30	150	30	43,5	193,5	10°	3.000	1
PD5S312049801	120	32	M30	200	30	43,5	243,5	10°	3.000	1
PD5S312053801	120	32	M30	250	30	43,5	293,5	10°	3.000	1
PD5S315002801	150	35	M16	75	16	44,5	119,5	10°	3.000	1
PD5S315004801	150	35	M16	100	16	44,5	144,5	10°	3.000	1
PD5S315007801	150	35	M16	150	16	44,5	194,5	10°	3.000	1
PD5S315010801	150	35	M16	200	16	44,5	244,5	10°	3.000	1
PD5S315012801	150	35	M20	75	20	44	119	10°	3.000	1
PD5S315014801	150	35	M20	100	20	44	144	10°	3.000	1
PD5S315017801	150	35	M20	150	20	44	194	10°	3.000	1
PD5S315020801	150	35	M20	200	20	44	244	10°	3.000	1
PD5S315023801	150	35	M20	250	20	44	294	10°	3.000	1
PD5S315025801	150	35	M24	100	24	44	144	10°	4.000	1
PD5S315029801	150	35	M24	150	24	44	194	10°	4.000	1
PD5S315034801	150	35	M24	200	24	44	244	10°	4.000	1
PD5S315038801	150	35	M24	250	24	44	294	10°	4.000	1
PD5S315040801	150	35	M30	100	30	44	145	10°	4.000	1
PD5S315044801	150	35	M30	150	30	44	195	10°	4.000	1
PD5S315049801	150	35	M30	200	30	44	245	10°	4.000	1
PD5S315053801	150	35	M30	250	30	44	295	10°	4.000	1

ARTICULATED FOOT TSLC
stainless steel

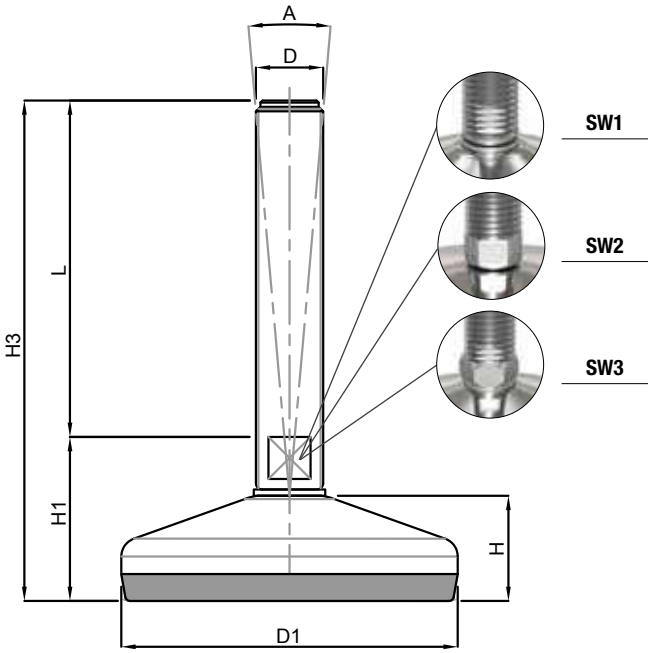

MATERIAL
Pin: AISI304 (Stainless steel)
Base: AISI304 (Stainless steel)
Slip-guard: NBR (Nitrile rubber) 80 ShA (±5)

COLOUR
Slip-guard: NE Black

CERTIFICATION
RoHS
REACH
FDA (only slip-guard)

NOTES
Available in other materials, surface treatments, colours.
* 1 DaN (decanewton) = 1.02 Kgf (kilogram-force).

Code	D1	H	D	L	SW1	SW2	SW3	H1	H3	A	Static load (DaN) *	Package (pcs)
PD6S308001800	80	25	M10	50	-	-	14	35	85	10°	1.000	1
PD6S308002800	80	25	M10	75	-	-	14	35	110	10°	1.000	1
PD6S308003800	80	25	M10	100	-	-	14	35	135	10°	1.000	1
PD6S308004800	80	25	M10	125	-	-	14	35	160	10°	1.000	1
PD6S308005800	80	25	M12	50	-	-	14	35	85	10°	1.000	1
PD6S308006800	80	25	M12	75	-	-	14	35	110	10°	1.000	1
PD6S308007800	80	25	M12	100	-	-	14	35	135	10°	1.000	1
PD6S308008800	80	25	M12	125	-	-	14	35	160	10°	1.000	1
PD6S308009800	80	25	M12	150	-	-	14	35	185	10°	1.000	1
PD6S308011800	80	25	M14	75	-	-	14	35	110	10°	1.000	1
PD6S308012800	80	25	M14	100	-	-	14	35	135	10°	1.000	1
PD6S308013800	80	25	M14	125	-	-	14	35	160	10°	1.000	1
PD6S308014800	80	25	M14	150	-	-	14	35	185	10°	1.000	1
PD6S308015800	80	25	M14	175	-	-	14	35	210	10°	1.000	1
PD6S308016800	80	25	M16	75	13	-	-	38	113	10°	1.000	1
PD6S308018800	80	25	M16	100	13	-	-	38	138	10°	1.000	1
PD6S308020800	80	25	M16	125	13	-	-	38	163	10°	1.000	1
PD6S308021800	80	25	M16	150	13	-	-	38	188	10°	1.000	1
PD6S308023800	80	25	M16	175	13	-	-	38	213	10°	1.000	1
PD6S308024800	80	25	M16	200	13	-	-	38	235	10°	1.000	1
PD6S308025800	80	25	M20	75	17	-	-	38	113	10°	1.000	1
PD6S308027800	80	25	M20	100	17	-	-	38	138	10°	1.000	1
PD6S308029800	80	25	M20	125	17	-	-	38	163	10°	1.000	1
PD6S308030800	80	25	M20	150	17	-	-	38	188	10°	1.000	1
PD6S308032800	80	25	M20	175	17	-	-	38	213	10°	1.000	1
PD6S308033800	80	25	M20	200	17	-	-	38	238	10°	1.000	1
PD6S308035800	80	25	M20	225	17	-	-	38	260	10°	1.000	1
PD6S308036800	80	25	M20	250	17	-	-	38	285	10°	1.000	1
PD6S308037800	80	25	M24	75	20	-	-	40	115	10°	1.000	1
PD6S308039800	80	25	M24	100	20	-	-	40	140	10°	1.000	1

MATERIAL
Pin: AISI304 (Stainless steel)
Base: AISI304 (Stainless steel)
Slip-guard: NBR (Nitrile rubber) 80 ShA (±5)

COLOUR
Slip-guard: NE Black

CERTIFICATION
RoHS
REACH
FDA (only slip-guard)

NOTES
Available in other materials, surface treatments, colours.
* 1 DaN (decanewton) = 1.02 Kgf (kilogram-force).

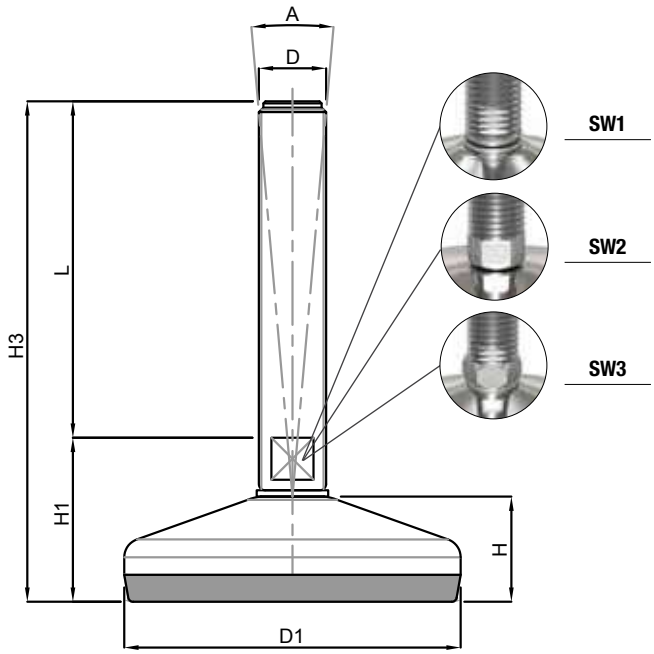

Code	D1	H	D	L	SW1	SW2	SW3	H1	H3	A	Static load (DaN) *	Package (pcs)
PD6S308041800	80	25	M24	125	20	-	-	40	165	10°	1.000	1
PD6S308042800	80	25	M24	150	20	-	-	40	190	10°	1.000	1
PD6S308045800	80	25	M24	175	20	-	-	40	215	10°	1.000	1
PD6S308046800	80	25	M24	200	20	-	-	40	240	10°	1.000	1
PD6S308049800	80	25	M24	225	20	-	-	40	265	10°	1.000	1
PD6S310001800	100	30	M16	75	13	-	-	42	117	10°	1.500	1
PD6S310003800	100	30	M16	100	13	-	-	42	142	10°	1.500	1
PD6S310005800	100	30	M16	125	13	-	-	42	167	10°	1.500	1
PD6S310006800	100	30	M16	150	13	-	-	42	192	10°	1.500	1
PD6S310008800	100	30	M16	175	13	-	-	42	217	10°	1.500	1
PD6S310009800	100	30	M16	200	13	-	-	42	242	10°	1.500	1
PD6S310011800	100	30	M20	75	17	-	-	42	117	10°	1.500	1
PD6S310013800	100	30	M20	100	17	-	-	42	142	10°	1.500	1
PD6S310015800	100	30	M20	125	17	-	-	42	167	10°	1.500	1
PD6S310016800	100	30	M20	150	17	-	-	42	192	10°	1.500	1
PD6S310018800	100	30	M20	175	17	-	-	42	217	10°	1.500	1
PD6S310019800	100	30	M20	200	17	-	-	42	242	10°	1.500	1
PD6S310021800	100	30	M20	225	17	-	-	42	267	10°	1.500	1
PD6S310022800	100	30	M20	250	17	-	-	42	292	10°	1.500	1
PD6S310024800	100	30	M24	100	20	-	-	44	144	10°	1.500	1
PD6S310026800	100	30	M24	125	20	-	-	44	169	10°	1.500	1
PD6S310027800	100	30	M24	150	20	-	-	44	194	10°	1.500	1
PD6S310031800	100	30	M24	175	20	-	-	44	219	10°	1.500	1
PD6S310032800	100	30	M24	200	20	-	-	44	244	10°	1.500	1
PD6S310036800	100	30	M24	225	20	-	-	44	269	10°	1.500	1
PD6S310037800	100	30	M24	250	20	-	-	44	294	10°	1.500	1
PD6S310039800	100	30	M30	100	-	26	-	44	144	10°	1.500	1
PD6S310041800	100	30	M30	125	-	26	-	44	169	10°	1.500	1
PD6S310042800	100	30	M30	150	-	26	-	44	194	10°	1.500	1
PD6S310046800	100	30	M30	175	-	26	-	44	219	10°	1.500	1
PD6S310047800	100	30	M30	200	-	26	-	44	244	10°	1.500	1

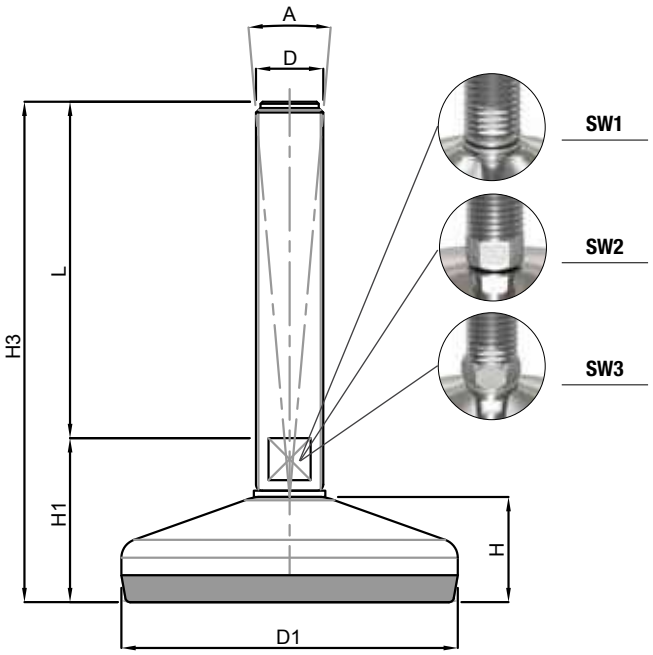

MATERIAL
Pin: AISI304 (Stainless steel)
Base: AISI304 (Stainless steel)
Slip-guard: NBR (Nitrile rubber) 80 ShA (±5)

COLOUR
Slip-guard: NE Black

CERTIFICATION
RoHS
REACH
FDA (only slip-guard)

NOTES
Available in other materials, surface treatments, colours.
* 1 DaN (decanewton) = 1.02 Kgf (kilogram-force).

Code	D1	H	D	L	SW1	SW2	SW3	H1	H3	A	Static load (DaN) *	Package (pcs)
PD6S310051800	100	30	M30	225	-	26	-	44	269	10°	1.500	1
PD6S310052800	100	30	M30	250	-	26	-	44	294	10°	1.500	1
PD6S312001800	120	32	M16	75	13	-	-	47	122	10°	3.000	1
PD6S312003800	120	32	M16	100	13	-	-	47	147	10°	3.000	1
PD6S312005800	120	32	M16	125	13	-	-	47	172	10°	3.000	1
PD6S312006800	120	32	M16	150	13	-	-	47	197	10°	3.000	1
PD6S312008800	120	32	M16	175	13	-	-	47	222	10°	3.000	1
PD6S312009800	120	32	M16	200	13	-	-	47	247	10°	3.000	1
PD6S312011800	120	32	M20	75	17	-	-	47	122	10°	3.000	1
PD6S312013800	120	32	M20	100	17	-	-	47	147	10°	3.000	1
PD6S312015800	120	32	M20	125	17	-	-	47	172	10°	3.000	1
PD6S312016800	120	32	M20	150	17	-	-	47	197	10°	3.000	1
PD6S312018800	120	32	M20	175	17	-	-	47	222	10°	3.000	1
PD6S312019800	120	32	M20	200	17	-	-	47	247	10°	3.000	1
PD6S312021800	120	32	M20	225	17	-	-	47	272	10°	3.000	1
PD6S312022800	120	32	M20	250	17	-	-	47	297	10°	3.000	1
PD6S312024800	120	32	M24	100	20	-	-	49	149	10°	3.000	1
PD6S312026800	120	32	M24	125	20	-	-	49	174	10°	3.000	1
PD6S312027800	120	32	M24	150	20	-	-	49	199	10°	3.000	1
PD6S312031800	120	32	M24	175	20	-	-	49	224	10°	3.000	1
PD6S312032800	120	32	M24	200	20	-	-	49	249	10°	3.000	1
PD6S312036800	120	32	M24	225	20	-	-	49	274	10°	3.000	1
PD6S312037800	120	32	M24	250	20	-	-	49	299	10°	3.000	1
PD6S312039800	120	32	M30	100	-	26	-	49	149	10°	3.000	1
PD6S312041800	120	32	M30	125	-	26	-	49	174	10°	3.000	1
PD6S312042800	120	32	M30	150	-	26	-	49	199	10°	3.000	1
PD6S312046800	120	32	M30	175	-	26	-	49	224	10°	3.000	1
PD6S312047800	120	32	M30	200	-	26	-	49	249	10°	3.000	1
PD6S312051800	120	32	M30	225	-	26	-	49	274	10°	3.000	1
PD6S312052800	120	32	M30	250	-	26	-	49	299	10°	3.000	1
PD6S315001800	150	35	M16	75	13	-	-	49	124	10°	3.000	1
PD6S315003800	150	35	M16	100	13	-	-	49	149	10°	3.000	1

MATERIAL
Pin: AISI304 (Stainless steel)
Base: AISI304 (Stainless steel)
Slip-guard: NBR (Nitrile rubber) 80 ShA (±5)

COLOUR
Slip-guard: NE Black

CERTIFICATION
RoHS
REACH
FDA (only slip-guard)

NOTES
Available in other materials, surface treatments, colours.
* 1 DaN (decanewton) = 1.02 Kgf (kilogram-force).

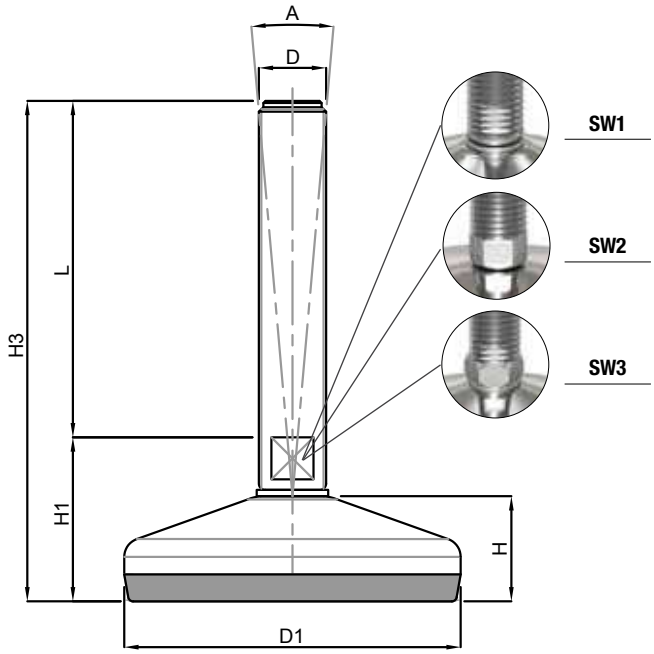

Code	D1	H	D	L	SW1	SW2	SW3	H1	H3	A	Static load (DaN) *	Package (pcs)
PD6S315005800	150	35	M16	125	13	-	-	49	174	10°	3.000	1
PD6S315006800	150	35	M16	150	13	-	-	49	199	10°	3.000	1
PD6S315008800	150	35	M16	175	13	-	-	49	224	10°	3.000	1
PD6S315009800	150	35	M16	200	13	-	-	49	249	10°	3.000	1
PD6S315011800	150	35	M20	75	17	-	-	48	123	10°	3.000	1
PD6S315013800	150	35	M20	100	17	-	-	48	148	10°	3.000	1
PD6S315015800	150	35	M20	125	17	-	-	48	173	10°	3.000	1
PD6S315016800	150	35	M20	150	17	-	-	48	198	10°	3.000	1
PD6S315018800	150	35	M20	175	17	-	-	48	223	10°	3.000	1
PD6S315019800	150	35	M20	200	17	-	-	48	248	10°	3.000	1
PD6S315021800	150	35	M20	225	17	-	-	48	273	10°	3.000	1
PD6S315022800	150	35	M20	250	17	-	-	48	298	10°	3.000	1
PD6S315024800	150	35	M24	100	20	-	-	49	149	10°	4.000	1
PD6S315026800	150	35	M24	125	20	-	-	49	174	10°	4.000	1
PD6S315027800	150	35	M24	150	20	-	-	49	199	10°	4.000	1
PD6S315031800	150	35	M24	175	20	-	-	49	224	10°	4.000	1
PD6S315032800	150	35	M24	200	20	-	-	49	249	10°	4.000	1
PD6S315036800	150	35	M24	225	20	-	-	49	274	10°	4.000	1
PD6S315037800	150	35	M24	250	20	-	-	49	299	10°	4.000	1
PD6S315039800	150	35	M30	100	-	26	-	50	150	10°	4.000	1
PD6S315041800	150	35	M30	125	-	26	-	50	175	10°	4.000	1
PD6S315042800	150	35	M30	150	-	26	-	50	200	10°	4.000	1
PD6S315046800	150	35	M30	175	-	26	-	50	225	10°	4.000	1
PD6S315047800	150	35	M30	200	-	26	-	50	250	10°	4.000	1
PD6S315051800	150	35	M30	225	-	26	-	50	275	10°	4.000	1
PD6S315052800	150	35	M30	250	-	26	-	50	300	10°	4.000	1
PD6S315054800	150	35	M36	150	-	32	-	50	200	10°	4.000	1
PD6S315055800	150	35	M36	200	-	32	-	50	250	10°	4.000	1
PD6S315056800	150	35	M36	250	-	32	-	50	300	10°	4.000	1

MATERIAL - SURFACE TREATMENT
Pin: AC (Steel) galvanized white
Base: C40 (Steel) galvanized white
Slip-guard: NBR (Nitrile rubber) 70 ShA (±5)

COLOUR
Slip-guard: NF Black

CERTIFICATION
RoHS
REACH

NOTES
Available in other materials, surface treatments, colours.
* 1 DaN (decanewton) = 1.02 Kgf (kilogram-force).

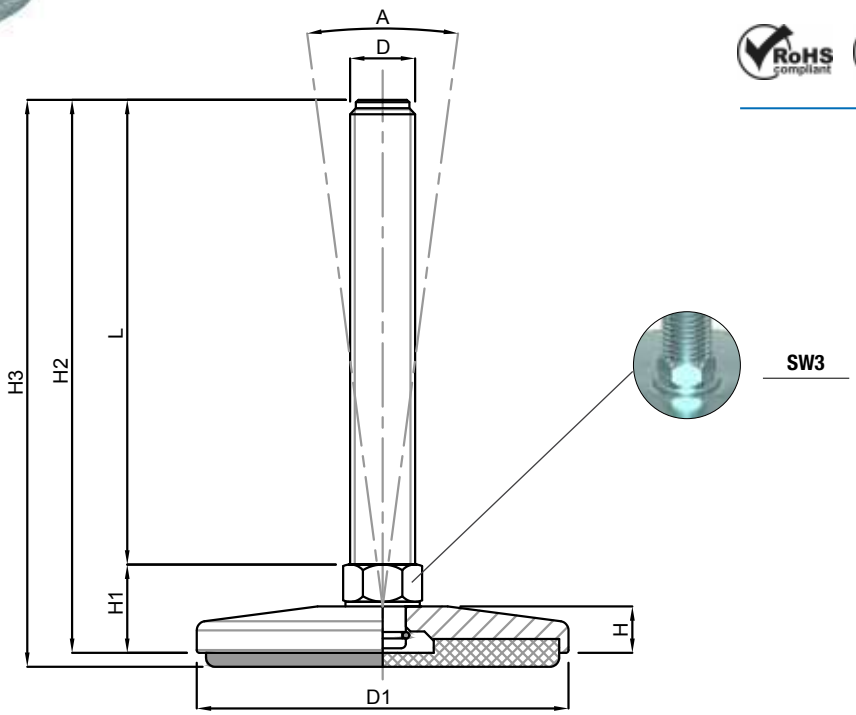

Code with slip-guard	Code without slip-guard	D1	H	D	L	SW3	H1	H2	H3	A	Static load (DaN) *	Package (pcs)
PD5S408001001	PD5S408001701	80	11,5	M10	50	14	19	69	72	5°	2.000	1
PD5S408002001	PD5S408002701	80	11,5	M10	100	14	19	119	122	5°	2.000	1
PD5S408003001	PD5S408003701	80	11,5	M12	50	14	19	69	72	5°	2.000	1
PD5S408004001	PD5S408004701	80	11,5	M12	100	14	19	119	122	5°	2.000	1
PD5S408005001	PD5S408005701	80	11,5	M14	50	14	19	69	72	5°	2.000	1
PD5S408006001	PD5S408006701	80	11,5	M14	100	14	19	119	122	5°	2.000	1
PD5S408007001	PD5S408007701	80	11,5	M14	150	14	19	169	172	5°	2.000	1
PD5S408008001	PD5S408008701	80	11,5	M16	75	16	19	94	97	5°	2.000	1
PD5S408009001	PD5S408009701	80	11,5	M16	100	16	19	119	122	5°	2.000	1
PD5S408010001	PD5S408010701	80	11,5	M16	150	16	19	169	172	5°	2.000	1
PD5S408011001	PD5S408011701	80	11,5	M20	75	20	19	94	97	5°	2.500	1
PD5S408012001	PD5S408012701	80	11,5	M20	125	20	19	144	147	5°	2.500	1
PD5S408013001	PD5S408013701	80	11,5	M20	175	20	19	194	197	5°	2.500	1
PD5S410001001	PD5S410001701	100	16	M16	75	20	25	100	103	5°	3.000	1
PD5S410002001	PD5S410002701	100	16	M16	100	20	25	125	128	5°	3.000	1
PD5S410003001	PD5S410003701	100	16	M16	150	20	25	175	178	5°	3.000	1
PD5S410004001	PD5S410004701	100	16	M20	75	20	25	100	103	5°	3.000	1
PD5S410005001	PD5S410005701	100	16	M20	125	20	25	150	153	5°	3.000	1
PD5S410006001	PD5S410006701	100	16	M20	175	20	25	200	203	5°	3.000	1
PD5S410007001	PD5S410007701	100	16	M24	100	24	25	125	128	5°	3.500	1
PD5S410008001	PD5S410008701	100	16	M24	150	24	25	175	178	5°	3.500	1
PD5S410010001	PD5S410010701	100	16	M24	200	24	25	225	228	5°	3.500	1
PD5S410012001	PD5S410012701	100	16	M30	125	30	26	151	154	5°	3.500	1
PD5S410013001	PD5S410013701	100	16	M30	175	30	26	201	204	5°	3.500	1

MATERIAL - SURFACE TREATMENT
Pin: AC (Steel) galvanized white
Base: C40 (Steel) galvanized white
Slip-guard: NBR (Nitrile rubber) 70 ShA (±5)

COLOUR
Slip-guard: NE Black

CERTIFICATION
RoHS
REACH

NOTES
Available in other materials, surface treatments, colours.
* 1 DaN (decanewton) = 1.02 Kgf (kilogram-force).

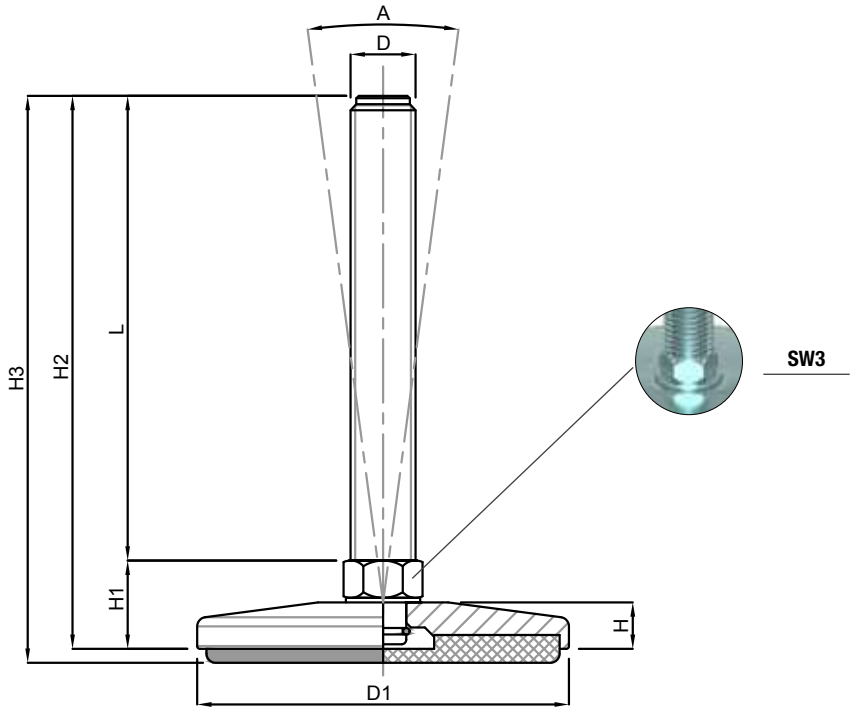

Code with slip-guard	Code without slip-guard	D1	H	D	L	SW3	H1	H2	H3	A	Static load (DaN) *	Package (pcs)
PD5S410015001	**PD5S410015701**	100	16	M30	225	30	26	251	254	5°	3.500	1
PD5S412001001	**PD5S412001701**	120	16	M16	75	20	25	100	103	5°	3.500	1
PD5S412002001	**PD5S412002701**	120	16	M16	100	20	25	125	128	5°	3.500	1
PD5S412003001	**PD5S412003701**	120	16	M16	150	20	25	175	178	5°	3.500	1
PD5S412004001	**PD5S412004701**	120	16	M20	75	20	25	100	103	5°	4.000	1
PD5S412005001	**PD5S412005701**	120	16	M20	125	20	25	150	153	5°	4.000	1
PD5S412006001	**PD5S412006701**	120	16	M20	175	20	25	200	203	5°	4.000	1
PD5S412007001	**PD5S412007701**	120	16	M24	100	24	25	125	128	5°	4.500	1
PD5S412008001	**PD5S412008701**	120	16	M24	150	24	25	175	178	5°	4.500	1
PD5S412010001	**PD5S412010701**	120	16	M24	200	24	25	225	228	5°	4.500	1
PD5S412012001	**PD5S412012701**	120	16	M30	125	30	26	151	154	5°	4.500	1
PD5S412013001	**PD5S412013701**	120	16	M30	175	30	26	201	204	5°	4.500	1
PD5S412015001	**PD5S412015701**	120	16	M30	225	30	26	251	254	5°	4.500	1
PD5S415001001	**PD5S415001701**	150	16	M20	75	20	25	100	103	5°	4.500	1
PD5S415002001	**PD5S415002701**	150	16	M20	125	20	25	150	153	5°	4.500	1
PD5S415003001	**PD5S415003701**	150	16	M20	175	20	25	200	203	5°	4.500	1
PD5S415004001	**PD5S415004701**	150	16	M20	200	20	25	225	228	5°	4.500	1
PD5S415005001	**PD5S415005701**	150	16	M24	100	24	25	125	128	5°	5.000	1
PD5S415006001	**PD5S415006701**	150	16	M24	150	24	25	175	178	5°	5.000	1
PD5S415008001	**PD5S415008701**	150	16	M24	200	24	25	225	228	5°	5.000	1
PD5S415010001	**PD5S415010701**	150	16	M30	125	30	26	151	154	5°	5.500	1
PD5S415011001	**PD5S415011701**	150	16	M30	175	30	26	201	204	5°	5.500	1
PD5S415013001	**PD5S415013701**	150	16	M30	225	30	26	251	254	5°	5.500	1

ARTICULATED FOOT TSLC
stainless steel

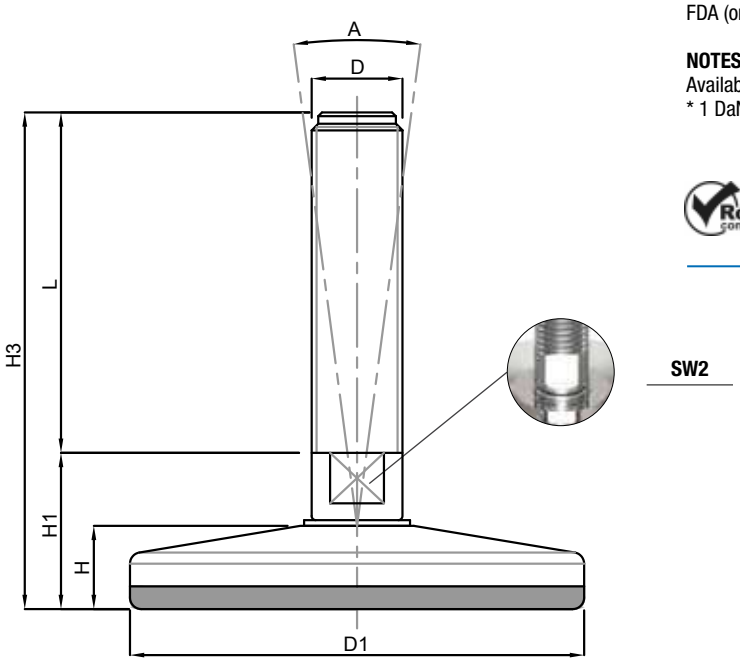

MATERIAL
Pin: AISI304 (Stainless steel)
Base: AISI304 (Stainless steel)
Slip-guard: NBR (Nitrile rubber) 90 ShA (±5)

COLOUR
Slip-guard: NE Black

CERTIFICATION
RoHS
REACH
FDA (only slip-guard)

NOTES
Available in other materials, surface treatments, colours.
* 1 DaN (decanewton) = 1.02 Kgf (kilogram-force).

Code	D1	H	D	L	SW2	H1	H3	A	Static load (DaN) *	Package (pcs)
PD6S507501900	75	20	M16	50	13	32,5	82,5	5°	2.000	1
PD6S507502900	75	20	M16	75	13	32,5	107,5	5°	2.000	1
PD6S507503900	75	20	M16	100	13	32,5	132,5	5°	2.000	1
PD6S507504900	75	20	M16	125	13	32,5	157,5	5°	2.000	1
PD6S507505900	75	20	M16	150	13	32,5	182,5	5°	2.000	1
PD6S507506900	75	20	M16	175	13	32,5	207,5	5°	2.000	1
PD6S507507900	75	20	M20	50	17	32,5	82,5	5°	2.000	1
PD6S507508900	75	20	M20	75	17	32,5	107,5	5°	2.000	1
PD6S507509900	75	20	M20	100	17	32,5	132,5	5°	2.000	1
PD6S507510900	75	20	M20	125	17	32,5	157,5	5°	2.000	1
PD6S507511900	75	20	M20	150	17	32,5	182,5	5°	2.000	1
PD6S507512900	75	20	M20	175	17	32,5	207,5	5°	2.000	1
PD6S507513900	75	20	M20	200	17	32,5	232,5	5°	2.000	1
PD6S507514900	75	20	M20	225	17	32,5	257,5	5°	2.000	1
PD6S510001900	100	25	M16	50	17	37	87	5°	3.000	1
PD6S510002900	100	25	M16	75	17	37	112	5°	3.000	1
PD6S510003900	100	25	M16	100	17	37	137	5°	3.000	1
PD6S510004900	100	25	M16	125	17	37	162	5°	3.000	1
PD6S510005900	100	25	M16	150	17	37	187	5°	3.000	1
PD6S510006900	100	25	M16	175	17	37	212	5°	3.000	1
PD6S510007900	100	25	M16	200	17	37	237	5°	3.000	1
PD6S510008900	100	25	M16	225	17	37	262	5°	3.000	1
PD6S510009900	100	25	M20	50	17	37	87	5°	3.000	1
PD6S510010900	100	25	M20	75	17	37	112	5°	3.000	1
PD6S510011900	100	25	M20	100	17	37	137	5°	3.000	1
PD6S510012900	100	25	M20	125	17	37	162	5°	3.000	1
PD6S510013900	100	25	M20	150	17	37	187	5°	3.000	1
PD6S510014900	100	25	M20	175	17	37	212	5°	3.000	1
PD6S510015900	100	25	M20	200	17	37	237	5°	3.000	1
PD6S510016900	100	25	M20	225	17	37	262	5°	3.000	1
PD6S510017900	100	25	M20	250	17	37	287	5°	3.000	1

MATERIAL
Pin: AISI304 (Stainless steel)
Base: AISI304 (Stainless steel)
Slip-guard: NBR (Nitrile rubber) 90 ShA (±5)

COLOUR
Slip-guard: NE Black

CERTIFICATION
RoHS
REACH
FDA (only slip-guard)

NOTES
Available in other materials, surface treatments, colours.
* 1 DaN (decanewton) = 1.02 Kgf (kilogram-force).

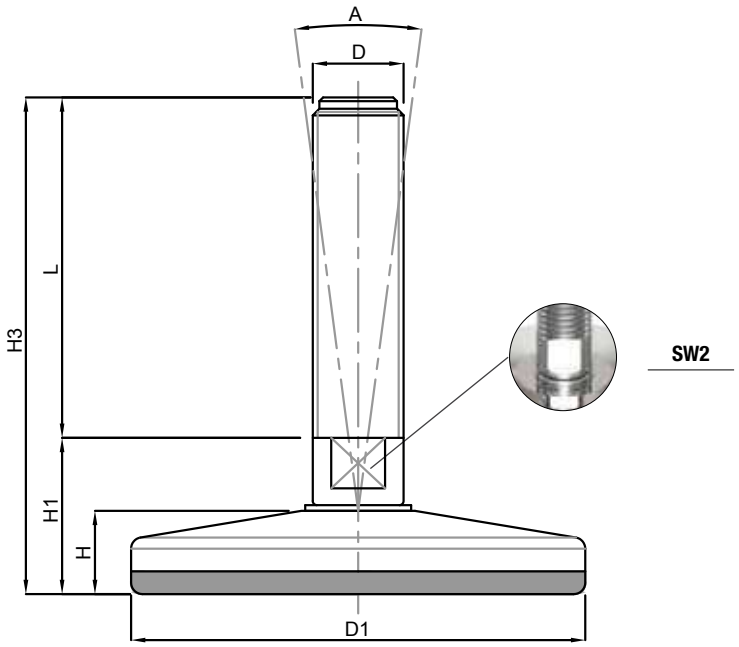

Code	D1	H	D	L	SW2	H1	H3	A	Static load (DaN) *	Package (pcs)
PD6S510018900	100	25	M24	75	20	38	113	5°	3.000	1
PD6S510019900	100	25	M24	100	20	38	138	5°	3.000	1
PD6S510020900	100	25	M24	125	20	38	163	5°	3.000	1
PD6S510021900	100	25	M24	150	20	38	188	5°	3.000	1
PD6S510023900	100	25	M24	175	20	38	213	5°	3.000	1
PD6S510024900	100	25	M24	200	20	38	238	5°	3.000	1
PD6S510026900	100	25	M24	225	20	38	263	5°	3.000	1
PD6S510027900	100	25	M24	250	20	38	288	5°	3.000	1
PD6S512001900	120	24	M16	50	17	36,5	86,5	5°	4.000	1
PD6S512002900	120	24	M16	75	17	36,5	111,5	5°	4.000	1
PD6S512003900	120	24	M16	100	17	36,5	136,5	5°	4.000	1
PD6S512004900	120	24	M16	125	17	36,5	161,5	5°	4.000	1
PD6S512005900	120	24	M16	150	17	36,5	186,5	5°	4.000	1
PD6S512006900	120	24	M16	175	17	36,5	211,5	5°	4.000	1
PD6S512007900	120	24	M16	200	17	36,5	236,5	5°	4.000	1
PD6S512008900	120	24	M16	225	17	36,5	261,5	5°	4.000	1
PD6S512009900	120	24	M20	75	17	36,5	111,5	5°	4.000	1
PD6S512010900	120	24	M20	100	17	36,5	136,5	5°	4.000	1
PD6S512011900	120	24	M20	125	17	36,5	161,5	5°	4.000	1
PD6S512012900	120	24	M20	150	17	36,5	186,5	5°	4.000	1
PD6S512013900	120	24	M20	175	17	36,5	211,5	5°	4.000	1
PD6S512014900	120	24	M20	200	17	36,5	236,5	5°	4.000	1
PD6S512015900	120	24	M20	225	17	36,5	261,5	5°	4.000	1
PD6S512016900	120	24	M20	250	17	36,5	286,5	5°	4.000	1
PD6S512017900	120	24	M24	75	20	37,5	112,5	5°	4.000	1
PD6S512018900	120	24	M24	100	20	37,5	137,5	5°	4.000	1
PD6S512019900	120	24	M24	125	20	37,5	162,5	5°	4.000	1
PD6S512020900	120	24	M24	150	20	37,5	187,5	5°	4.000	1
PD6S512022900	120	24	M24	175	20	37,5	212,5	5°	4.000	1
PD6S512023900	120	24	M24	200	20	37,5	237,5	5°	4.000	1
PD6S512025900	120	24	M24	225	20	37,5	262,5	5°	4.000	1

ARTICULATED FOOT TSLC
stainless steel

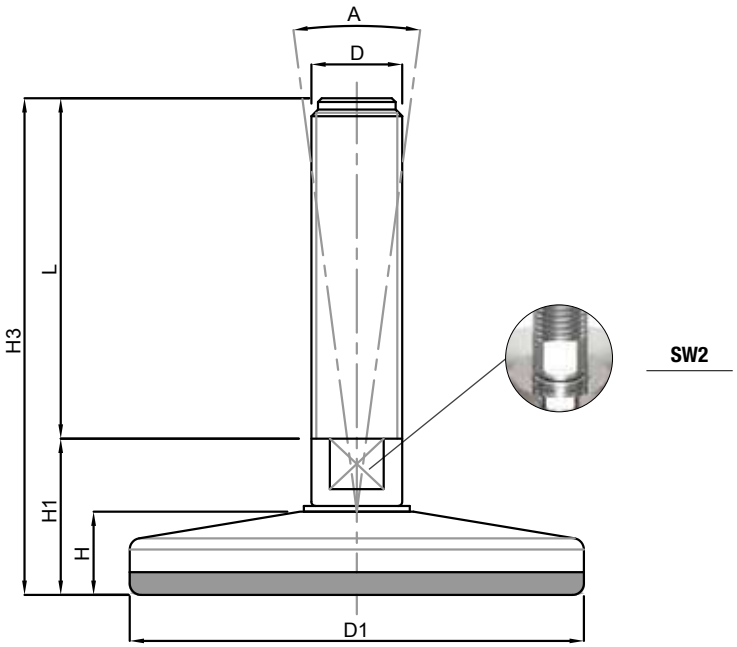

MATERIAL
Pin: AISI304 (Stainless steel)
Base: AISI304 (Stainless steel)
Slip-guard: NBR (Nitrile rubber) 90 ShA (±5)

COLOUR
Slip-guard: NE Black

CERTIFICATION
RoHS
REACH
FDA (only slip-guard)

NOTES
Available in other materials, surface treatments, colours.
* 1 DaN (decanewton) = 1.02 Kgf (kilogram-force).

Code	D1	H	D	L	SW2	H1	H3	A	Static load (DaN) *	Package (pcs)
PD6S512026900	120	24	M24	250	20	37,5	287,5	5°	4.000	1
PD6S512027900	120	24	M30	75	26	37,5	112,5	5°	4.000	1
PD6S512028900	120	24	M30	100	26	37,5	137,5	5°	4.000	1
PD6S512029900	120	24	M30	125	26	37,5	162,5	5°	4.000	1
PD6S512030900	120	24	M30	150	26	37,5	187,5	5°	4.000	1
PD6S512032900	120	24	M30	175	26	37,5	212,5	5°	4.000	1
PD6S512033900	120	24	M30	200	26	37,5	237,5	5°	4.000	1
PD6S512035900	120	24	M30	225	26	37,5	262,5	5°	4.000	1
PD6S512036900	120	24	M30	250	26	37,5	287,5	5°	4.000	1
PD6S515001900	150	26,5	M20	75	17	39	114	5°	5.000	1
PD6S515002900	150	26,5	M20	100	17	39	139	5°	5.000	1
PD6S515003900	150	26,5	M20	125	17	39	164	5°	5.000	1
PD6S515004900	150	26,5	M20	150	17	39	189	5°	5.000	1
PD6S515005900	150	26,5	M20	175	17	39	214	5°	5.000	1
PD6S515006900	150	26,5	M20	200	17	39	239	5°	5.000	1
PD6S515007900	150	26,5	M20	225	17	39	264	5°	5.000	1
PD6S515008900	150	26,5	M20	250	17	39	289	5°	5.000	1
PD6S515009900	150	26,5	M24	100	20	40	140	5°	5.000	1
PD6S515010900	150	26,5	M24	125	20	40	165	5°	5.000	1
PD6S515011900	150	26,5	M24	150	20	40	190	5°	5.000	1
PD6S515013900	150	26,5	M24	175	20	40	215	5°	5.000	1
PD6S515014900	150	26,5	M24	200	20	40	240	5°	5.000	1
PD6S515016900	150	26,5	M24	225	20	40	265	5°	5.000	1
PD6S515017900	150	26,5	M24	250	20	40	290	5°	5.000	1
PD6S515018900	150	26,5	M30	100	26	40	140	5°	5.000	1
PD6S515019900	150	26,5	M30	125	26	40	165	5°	5.000	1
PD6S515020900	150	26,5	M30	150	26	40	190	5°	5.000	1
PD6S515022900	150	26,5	M30	175	26	40	215	5°	5.000	1
PD6S515023900	150	26,5	M30	200	26	40	240	5°	5.000	1
PD6S515025900	150	26,5	M30	225	26	40	265	5°	5.000	1
PD6S515026900	150	26,5	M30	250	26	40	290	5°	5.000	1

MATERIAL - SURFACE TREATMENT
Pin: AC (Steel) galvanized white
Base: AC (Steel) galvanized white

CERTIFICATION
RoHS
REACH

NOTES
* 1 DaN (decanewton) = 1.02 Kgf (kilogram-force).

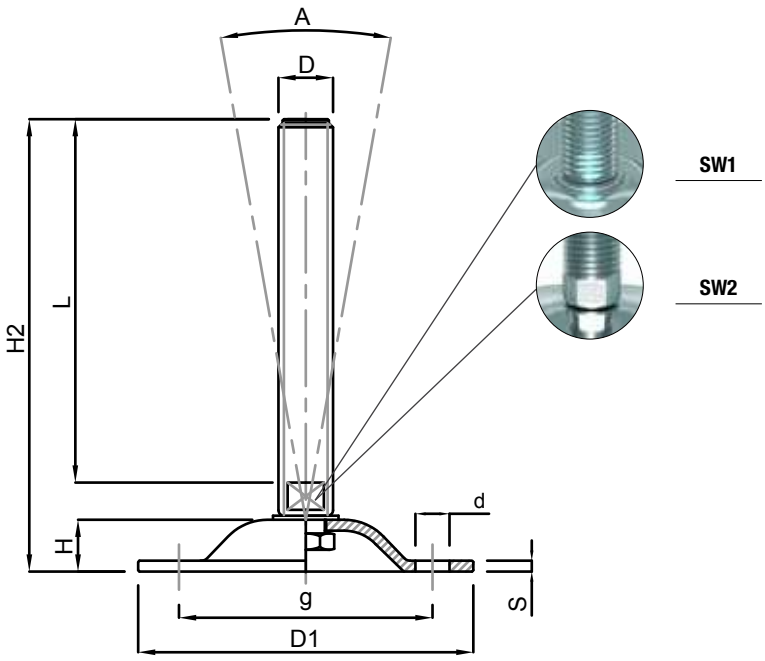

Code	D1	H	D	L	SW1	SW2	H2	g	d	S	A	Static load (DaN) *	Package (pcs)
PD5S612401001	124	20,5	M16	100	-	17	134	98	12,5	4	8°	2.000	1
PD5S612402001	124	20,5	M16	150	-	17	184	98	12,5	4	8°	2.000	1
PD5S612403001	124	20,5	M16	175	-	17	209	98	12,5	4	8°	2.000	1
PD5S612404001	124	20,5	M20	100	17	-	134	98	12,5	4	8°	2.500	1
PD5S612405001	124	20,5	M20	150	17	-	184	98	12,5	4	8°	2.500	1
PD5S612406001	124	20,5	M20	175	17	-	209	98	12,5	4	8°	2.500	1
PD5S612407001	124	20,5	M20	200	17	-	234	98	12,5	4	8°	2.500	1
PD5S612408001	124	20,5	M24	100	20	-	134	98	12,5	4	8°	3.000	1
PD5S612409001	124	20,5	M24	150	20	-	184	98	12,5	4	8°	3.000	1
PD5S612410001	124	20,5	M24	200	20	-	234	98	12,5	4	8°	3.000	1
PD5S612411001	124	20,5	M30	150	-	26	185	98	12,5	4	8°	3.500	1
PD5S612412001	124	20,5	M30	200	-	26	235	98	12,5	4	8°	3.500	1
PD5S612413001	124	20,5	M30	250	-	26	285	98	12,5	4	8°	3.500	1

ARTICULATED FOOT 4F TSLC-E
stainless steel

MATERIAL
Pin: AISI304 (Stainless steel)
Base: AISI304 (Stainless steel)

CERTIFICATION
RoHS
REACH
FDA (only slip-guard)

NOTES
* 1 DaN (decanewton) = 1.02 Kgf (kilogram-force).

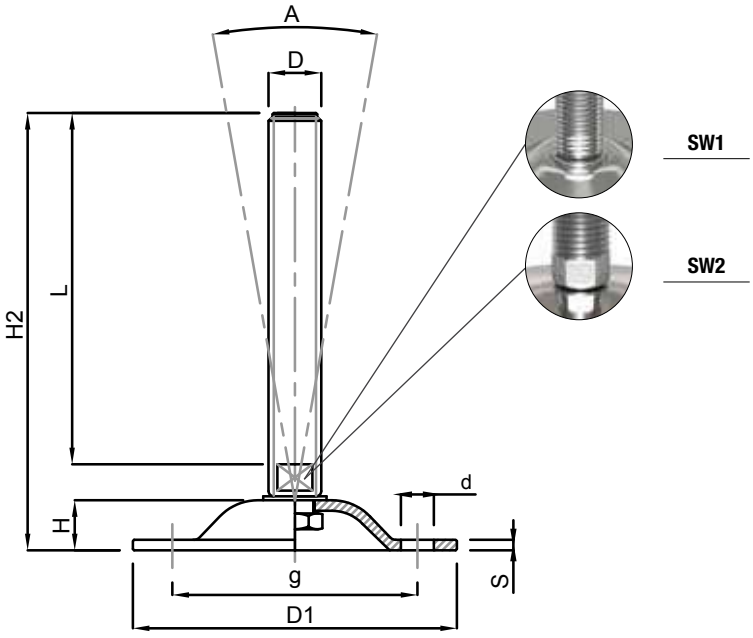

Code	D1	H	D	L	SW1	SW2	H2	g	d	S	A	Static load (DaN) *	Package (pcs)
PD6S612401000	124	20,5	M16	100	-	17	134	98	12,5	4	8°	2.000	1
PD6S612402000	124	20,5	M16	150	-	17	184	98	12,5	4	8°	2.000	1
PD6S612403000	124	20,5	M16	175	-	17	209	98	12,5	4	8°	2.000	1
PD6S612404000	124	20,5	M20	100	17	-	134	98	12,5	4	8°	2.500	1
PD6S612405000	124	20,5	M20	150	17	-	184	98	12,5	4	8°	2.500	1
PD6S612407000	124	20,5	M20	200	17	-	234	98	12,5	4	8°	2.500	1
PD6S612408000	124	20,5	M24	100	20	-	134	98	12,5	4	8°	3.000	1
PD6S612409000	124	20,5	M24	150	20	-	184	98	12,5	4	8°	3.000	1
PD6S612410000	124	20,5	M24	200	20	-	234	98	12,5	4	8°	3.000	1
PD6S612411000	124	20,5	M30	150	-	26	185	98	12,5	4	8°	3.500	1
PD6S612412000	124	20,5	M30	200	-	26	235	98	12,5	4	8°	3.500	1
PD6S612413000	124	20,5	M30	250	-	26	285	98	12,5	4	8°	3.500	1

MATERIAL - SURFACE TREATMENT
Pin: AC (Steel) galvanized white
Base: AC (Steel) galvanized white
Nut: Cl 4 (Steel) white galvanized

CERTIFICATION
RoHS
REACH

NOTES
If tightened, the low hexagonal nut under the key transforms the foot pin from articulated to fixed.
* 1 DaN (decanewton) = 1.02 Kgf (kilogram-force).

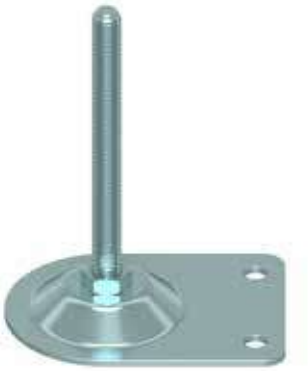

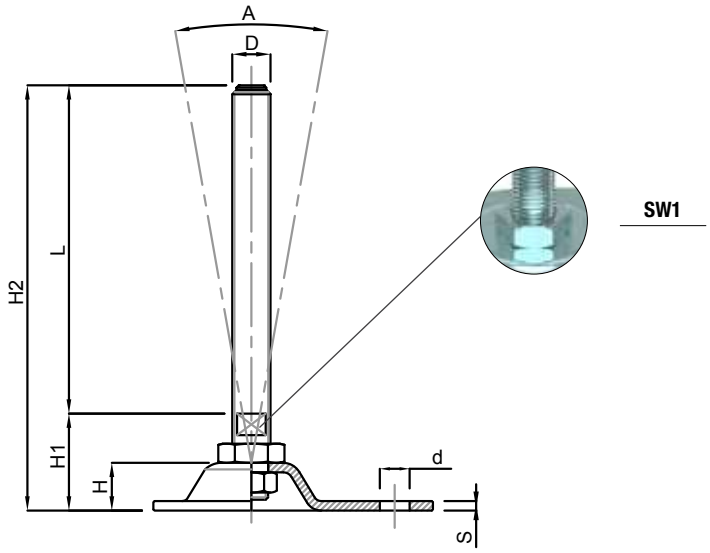

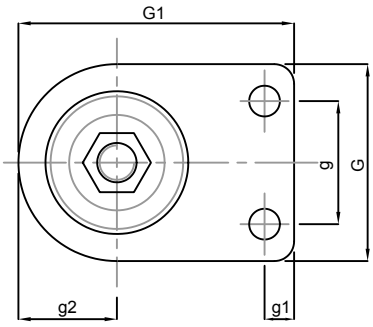

Code	G	G1	H	D	L	SW1	H1	H2	g	g1	g2	d	S	A	Static load (DaN) *	Package (pcs)
PD5S708001001	80	112	19	M16	150	13	39,5	189,5	50	12	40	12,5	3	8°	2.000	1
PD5S708002001	80	112	19	M16	200	13	39,5	239,5	50	12	40	12,5	3	8°	2.000	1
PD5S708003001	80	112	19	M20	150	17	40,5	190,5	50	12	40	12,5	3	8°	2.000	1
PD5S708004001	80	112	19	M20	200	17	40,5	240,5	50	12	40	12,5	3	8°	2.000	1
PD5S711001001	110	151	19	M16	150	17	41	191	70	16	55	12,5	4	8°	2.500	1
PD5S711002001	110	151	19	M16	200	17	41	241	70	16	55	12,5	4	8°	2.500	1
PD5S711003001	110	151	19	M20	150	17	42	192	70	16	55	12,5	4	8°	2.500	1
PD5S711004001	110	151	19	M20	200	17	42	242	70	16	55	12,5	4	8°	2.500	1
PD5S711005001	110	151	19	M24	150	20	43	193	70	16	55	12,5	4	8°	3.000	1
PD5S711006001	110	151	19	M24	200	20	43	243	70	16	55	12,5	4	8°	3.000	1

ARTICULATED FOOT 2F DSLC-E
stainless steel

MATERIAL
Pin: AISI304 (Stainless steel)
Base: AISI304 (Stainless steel)
Nut: AISI304 (Stainless steel)

CERTIFICATION
RoHS
REACH
FDA (only slip-guard)

NOTES
If tightened, the low hexagonal nut under the key transforms the foot pin from articulated to fixed.
* 1 DaN (decanewton) = 1.02 Kgf (kilogram-force).

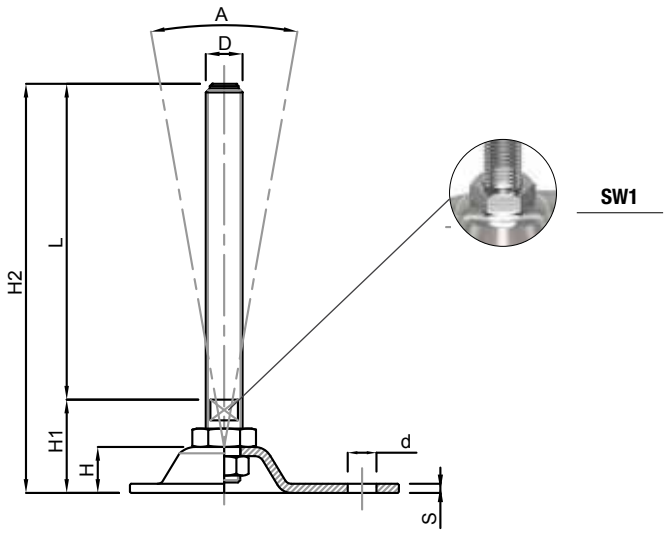

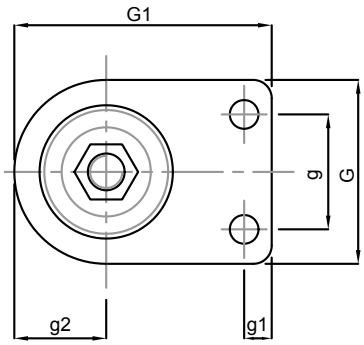

Code	G	G1	H	D	L	SW1	H1	H2	g	g1	g2	d	S	A	Static load (DaN) *	Package (pcs)
PD6S708001000	80	112	19	M16	150	13	39,5	189,5	50	12	40	12,5	3	8°	2.000	1
PD6S708002000	80	112	19	M16	200	13	39,5	239,5	50	12	40	12,5	3	8°	2.000	1
PD6S708003000	80	112	19	M20	150	17	40,5	190,5	50	12	40	12,5	3	8°	2.000	1
PD6S708004000	80	112	19	M20	200	17	40,5	240,5	50	12	40	12,5	3	8°	2.000	1
PD6S711001000	110	151	19	M16	150	17	41	191	70	16	55	12,5	4	8°	2.500	1
PD6S711002000	110	151	19	M16	200	17	41	241	70	16	55	12,5	4	8°	2.500	1
PD6S711003000	110	151	19	M20	150	17	42	192	70	16	55	12,5	4	8°	2.500	1
PD6S711004000	110	151	19	M20	200	17	42	242	70	16	55	12,5	4	8°	2.500	1
PD6S711005000	110	151	19	M24	150	20	43	193	70	16	55	12,5	4	8°	3.000	1
PD6S711006000	110	151	19	M24	200	20	43	243	70	16	55	12,5	4	8°	3.000	1

20

INDUSTRIAL WHEELS

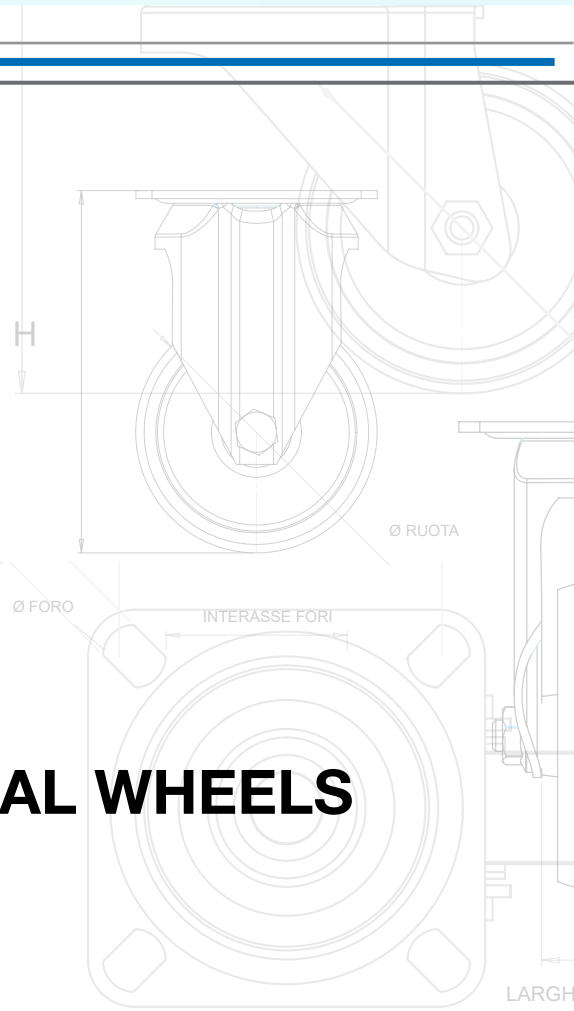

Sheet metal core rubber ring wheels
page 20.1

Thermoplastic core rubber ring wheels
page 20.5

Solid polyamide wheels
page 20.9

Solid phenolic resin wheels
page 20.13

Aluminium core polyurethane ring wheels
page 20.17

Cast iron core polyurethane ring wheels
page 20.21

Steel core polyurethane ring wheels
page 20.25

Wheel diameter

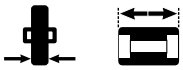
Wheel band width

Hub hole diameter

Hub width

Fixed plate wheel

Swivel plate wheel

Total front brake swivel plate wheel

Total rear brake swivel plate wheel

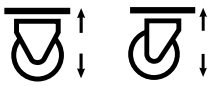
Height

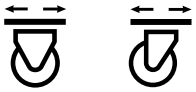
Plate base dimensions

Plate hole space

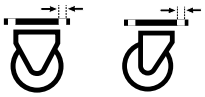
Plate hole diameter

Fork width
Fork hole diameter

Offset

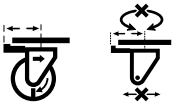
Brake lever footprint radius

Relative use capacity 15°C ÷ 28°C
1DaN (decanewton) = 1,02Kgf (kilogram-force)

Through-hole hub/bushing

Steel roller bearing hub

Stainless steel roller bearing hub

Steel ball bearing hub

Tiled floor

Asphalt floor

Cement/resin floor

Dirt floor

Slatted floor

Chip floor

MATERIAL - SURFACE TREATMENT
Wheel: Black ring GM (rubber) 85 ShA (±4) black
Core AC (Steel) white galvanized

HUB

WORKING SPEED
4 Km/h max

OPERATING TEMPERATURE
-20°C ÷ 60°C

USE
Manual cart for medium loads; keep away from grease, oil, hydrocarbon, chlorinated and aromatic solvents.

ACCESSORIES
Mounting accessories are not included but are available upon request.

Code			DaN			Package (pcs)
RH00100800000	80	25	50	12	39	48
RH00101000000	100	30	70	12	39	36
RH00101250000	125	37,5	110	15	44	20
RH00101400000	140	37,5	140	15	44	16
RH00101500000	150	40	150	20	45	10
RH00101600000	160	40	160	20	45	10
RH00101800000	180	45	180	20	58	4
RH00102000000	200	50	220	20	58	4
RH00102250000	225	50	225	20	58	4
RH00102500000	250	60	300	25	77,5	3
RH00102800000	280	70	350	25	77,5	4

MATERIAL - SURFACE TREATMENT
Wheel: Black ring GM (rubber) 85 ShA (±4) black Core AC (Steel) white galvanized
Support: Fixed plate AC (Steel) white galvanized

HUB

WORKING SPEED
4 Km/h max

OPERATING TEMPERATURE
-20°C ÷ 60°C

USE
Manual cart for medium loads; keep away from grease, oil, hydrocarbon, chlorinated and aromatic solvents.

NOTES
Also available with stainless steel supports.

Code			DaN						Package (pcs)
RH501F0800000	80	25	50	108	100 x 84	80 x 60	9	40 x 8	16
RH501F1000000	100	30	70	127	100 x 84	80 x 60	9	40 x 8	12
RH501F1250000	125	37,5	110	159	116 x 84	80 x 60	9	44 x 8	8
RH501F1400000	140	37,5	140	179	116 x 84	80 x 60	9	44 x 8	6
RH501F1500000	150	40	150	186	135 x 110	105 x 80	11	48 x 10	4
RH501F1600000	160	40	160	191	135 x 110	105 x 80	11	48 x 10	4
RH501F1800000	180	45	180	230	135 x 110	105 x 80	11	60 x 12	4
RH501F2000000	200	50	220	240	135 x 110	105 x 80	11	60 x 12	2
RH501F2250000	225	50	225	252	135 x 110	105 x 80	11	60 x 12	2
RH501F2500000	250	60	300	310	175 x 145	140 x 105	14	79 x 18	2
RH501F2800000	280	70	350	325	175 x 145	140 x 105	14	79 x 18	2

MATERIAL - SURFACE TREATMENT
Wheel: Black ring GM (rubber) 85 ShA (±4) black Core AC (Steel) white galvanized
Support: Double crown ball swivel plate AC (Steel) white galvanized

HUB
H

WORKING SPEED
4 Km/h max

OPERATING TEMPERATURE
-20°C ÷ 60°C

USE
Manual cart for medium loads; keep away from grease, oil, hydrocarbon, chlorinated and aromatic solvents.

NOTES
Also available with stainless steel supports.

Code	⌀		DaN							Package (pcs)
RH501R0800000	80	25	50	108	95 x 80	80 x 60	9	40 x 8	32	16
RH501R1000000	100	30	70	127	95 x 80	80 x 60	9	40 x 8	32	12
RH501R1250000	125	37,5	110	159	117 x 85	80 x 60	9	44 x 8	47	8
RH501R1400000	140	37,5	140	179	117 x 85	80 x 60	9	44 x 8	47	6
RH501R1500000	150	40	150	186	133 x 106	105 x 80	11	48 x 10	47	4
RH501R1600000	160	40	160	191	133 x 106	105 x 80	11	48 x 10	47	4
RH501R1800000	180	45	180	230	129 x 106	105 x 80	11	60 x 12	48	4
RH501R2000000	200	50	220	240	129 x 106	105 x 80	11	60 x 12	48	2
RH501R2250000	225	50	225	252	132 x 110	105 x 80	11	60 x 12	56	2
RH501R2500000	250	60	300	310	186 x 170	186 x 170	14	79 x 18	80	2
RH501R2800000	280	70	350	325	186 x 170	186 x 170	14	79 x 18	80	2

MATERIAL - SURFACE TREATMENT

Wheel: Black ring GM (rubber) 85 ShA (±4) black Core AC (Steel) white galvanized

Support: Total brake double crown ball swivel plate AC (Steel) white galvanized

HUB

WORKING SPEED
4 Km/h max

OPERATING TEMPERATURE
-20°C ÷ 60°C

USE
Manual cart for medium loads; keep away from grease, oil, hydrocarbon, chlorinated and aromatic solvents.

NOTES
Also available with stainless steel supports.

Code			DaN									Package (pcs)
RH501S080A000	80	25	50	108	95 x 80	80 x 60	9	40 x 8	32	110	-	16
RH501S100A000	100	30	70	127	95 x 80	80 x 60	9	40 x 8	32	110	-	12
RH501S125A000	125	37,5	110	159	117 x 85	80 x 60	9	44 x 8	47	130	-	6
RH501S140A000	140	37,5	140	179	117 x 85	80 x 60	9	44 x 8	47	128	-	4
RH501S150A000	150	40	150	186	133 x 106	105 x 80	11	48 x 10	47	144	-	4
RH501S160A000	160	40	160	191	133 x 106	105 x 80	11	48 x 10	47	144	-	4
RH501S180A000	180	45	180	230	129 x 106	105 x 80	11	60 x 12	48	150	-	4
RH501S200A000	200	50	220	240	129 x 106	105 x 80	11	60 x 12	48	150	-	2
RH501S250P000	250	60	310	310	186 x 170	186 x 170	14	79 x 12	80	-	134	2
RH501S280P000	280	70	325	325	186 x 170	186 x 170	14	79 x 12	80	-	133	2

MATERIAL - SURFACE TREATMENT
Wheel: Black ring GM (rubber) 80 ShA (±5) grey streak-proof
Core TMP (Thermoplastic) black

HUB

WORKING SPEED
3 Km/h max

OPERATING TEMPERATURE
-5°C ÷ 50°C

USE
Only manual cart operated inside building as display stand, restaurant equipment, trolley, office equipment, medical furniture, electrical appliance, etc.; keep away from grease, oil, hydrocarbon, chlorinated and aromatic solvents.

1 2 3

ACCESSORIES
Mounting accessories are not included but are available upon request.

Code			DaN			Package (pcs)
RH00400600000	60	20	60	10	27	48
RH00400800000	80	22	60	10	27	48
RH00401000000	100	28	80	12	32	40
RH00401250000	125	28	80	12	32	20

MATERIAL - SURFACE TREATMENT

Wheel: Black ring GM (rubber) 80 ShA (±5) grey streak-proof
Core TMP (Thermoplastic) black
Thread-guard AC (Steel) chrome-plated

Support: Fixed plate AC (Steel) chrome-plated

HUB

WORKING SPEED
3 Km/h max

OPERATING TEMPERATURE
-5°C ÷ 50°C

USE
Only manual cart operated inside building as display stand, restaurant equipment, trolley, office equipment, medical furniture, electrical appliance, etc.; keep away from grease, oil, hydrocarbon, chlorinated and aromatic solvents.

1 2 3

NOTES
Also available with stainless steel supports.

Code			DaN						Package (pcs)
RH504F0600P00	60	20	60	90	60 x 60	45 x 45	6,5	28 x 6	40
RH504F0800P00	80	22	60	109	60 x 60	45 x 45	6,5	28 x 6	32
RH504F1000P00	100	28	80	134	76 x 70	60 x 50	8,3	33 x 8	16
RH504F1250P00	125	28	80	159	76 x 70	60 x 50	8,3	33 x 8	12

MATERIAL - SURFACE TREATMENT
Wheel: Black ring GM (rubber) 80 ShA (±5) grey streak-proof
Core TMP (Thermoplastic) black
Thread-guard AC (Steel) chrome-plated
Support: Double crown ball swivel plate AC (Steel) chrome-plated

HUB

WORKING SPEED
3 Km/h max

OPERATING TEMPERATURE
-5°C ÷ 50°C

USE
Only manual cart operated inside building as display stand, restaurant equipment, trolley, office equipment, medical furniture, electrical appliance, etc.; keep away from grease, oil, hydrocarbon, chlorinated and aromatic solvents.

1 2 3

NOTES
Also available with stainless steel supports.

Code			DaN							Package (pcs)
RH504R0600P00	60	20	60	90	60 x 60	45 x 45	6,5	28 x 6	26	36
RH504R0800P00	80	22	60	109	60 x 60	45 x 45	6,5	28 x 6	25	32
RH504R1000P00	100	28	80	134	76 x 70	60 x 50	8,3	33 x 8	36	16
RH504R1250P00	125	28	80	159	76 x 70	60 x 50	8,3	33 x 8	35	12

MATERIAL - SURFACE TREATMENT

Wheel: Black ring GM (rubber) 80 ShA (±5) grey streak-proof
Core TMP (Thermoplastic) black
Thread-guard AC (Steel) chrome-plated

Support: Total brake double crown ball swivel plate AC (Steel) chrome-plated

HUB

WORKING SPEED
3 Km/h max

OPERATING TEMPERATURE
-5°C ÷ 50°C

USE
Only manual cart operated inside building as display stand, restaurant equipment, trolley, office equipment, medical furniture, electrical appliance, etc.; keep away from grease, oil, hydrocarbon, chlorinated and aromatic solvents.

1 2 3

NOTES
Also available with stainless steel supports.

Code			DaN								Package (pcs)
RH504S060AP00	60	20	60	90	60 x 60	45 x 45	6,5	28 x 6	26	84	36
RH504S080AP00	80	22	60	109	60 x 60	45 x 45	6,5	28 x 6	25	84	32
RH504S100AP00	100	28	80	134	76 x 70	60 x 50	8,3	33 x 8	36	106	16
RH504S125AP00	125	28	80	159	76 x 70	60 x 50	8,3	33 x 8	35	106	12

MATERIAL - SURFACE TREATMENT
Wheel: PA6 (Polyamide) white

HUB

WORKING SPEED
4 Km/h max

OPERATING TEMPERATURE
-25°C ÷ 80°C

USE
Manual cart for medium loads; good resistance to abrasion, petroleum products, and chemicals, but keep away from contact with strong acid.

1 3

NOTES
Wheel diameter <175 corrugated core.
Wheel diameter >150 smooth core.

ACCESSORIES
Mounting accessories are not included but are available upon request.

Code			DaN			Package (pcs)
RH00300800000	80	30	100	12	39	48
RH00301000000	100	30	130	12	39	36
RH00301250000	125	39	200	15	44	20
RH00301500000	150	40	250	20	45	4
RH00301750000	175	45	300	20	58	4
RH00302000000	200	50	380	20	58	2

MATERIAL - SURFACE TREATMENT
Wheel: PA6 (Polyamide) white
Support: Fixed plate AC (Steel) white galvanized

HUB

WORKING SPEED
4 Km/h max

OPERATING TEMPERATURE
-25°C ÷ 80°C

USE
Manual cart for medium loads; good resistance to abrasion, petroleum products, and chemicals, but keep away from contact with strong acid.

1 3

NOTES
Wheel diameter <175 corrugated core.
Wheel diameter >150 smooth core.
Also available with stainless steel supports.

Code			DaN						Package (pcs)
RH503F0800000	80	30	100	108	100 x 84	80 x 60	9	40 x 8	16
RH503F1000000	100	30	130	127	100 x 84	80 x 60	9	40 x 8	12
RH503F1250000	125	39	200	159	116 x 84	80 x 60	9	44 x 8	12
RH503F1500000	150	40	220	186	135 x 110	105 x 80	11	48 x 10	8
RH503F1750000	175	45	270	228	135 x 110	105 x 80	11	60 x 12	4
RH503F2000000	200	50	300	240	135 x 110	105 x 80	11	60 x 12	4

MATERIAL - SURFACE TREATMENT
Wheel: PA6 (Polyamide) white
Support: Double crown ball swivel plate AC (Steel) white galvanized

HUB

WORKING SPEED
4 Km/h max

OPERATING TEMPERATURE
-25°C ÷ 80°C

USE
Manual cart for medium loads; good resistance to abrasion, petroleum products, and chemicals, but keep away from contact with strong acid.

1 3

NOTES
Wheel diameter <175 corrugated core.
Wheel diameter >150 smooth core.
Also available with stainless steel supports.

Code			DaN							Package (pcs)
RH503R0800000	80	30	100	108	95 x 80	80 x 60	9	40 x 8	32	20
RH503R1000000	100	30	130	127	95 x 80	80 x 60	9	40 x 8	32	16
RH503R1250000	125	39	200	159	117 x 85	80 x 60	9	44 x 8	46	15
RH503R1500000	150	40	220	186	133 x 106	105 x 80	11	48 x 10	47	10
RH503R1750000	175	45	270	228	129 x 106	105 x 80	11	60 x 12	48	6
RH503R2000000	200	50	270	240	129 x 106	105 x 80	11	60 x 12	48	4

MATERIAL - SURFACE TREATMENT
Wheel: PA6 (Polyamide) white
Support: Total brake double crown ball swivel plate AC (Steel) white galvanized

HUB

WORKING SPEED
4 Km/h max

OPERATING TEMPERATURE
-25°C ÷ 80°C

USE
Manual cart for medium loads; good resistance to abrasion, petroleum products, and chemicals, but keep away from contact with strong acid.

1 3

NOTES
Wheel diameter <175 corrugated core.
Wheel diameter >150 smooth core.
Also available with stainless steel supports.

Code			DaN								Package (pcs)
RH503S080A000	80	30	100	108	95 x 80	80 x 60	9	40 x 8	32	110	16
RH503S100A000	100	30	130	127	95 x 80	80 x 60	9	40 x 8	32	110	14
RH503S125A000	125	39	200	159	117 x 85	80 x 60	9	44 x 8	46	130	12
RH503S150A000	150	40	220	186	133 x 106	105 x 80	11	48 x 10	47	144	8
RH503S175A000	175	45	270	228	129 x 106	105 x 80	11	60 x 12	48	150	6
RH503S200A000	200	50	270	240	129 x 106	105 x 80	11	60 x 12	48	150	4

MATERIAL - SURFACE TREATMENT
Wheel: PF (Phenolic resin) black

HUB

WORKING SPEED
4 Km/h max

OPERATING TEMPERATURE
-25°C ÷ 260°C

USE
Manual cart for light loads; good resistance to humidity, petroleum products, and chemicals, but low resistance to abrasion.

1 3

ACCESSORIES
Mounting accessories are not included but are available upon request.

Code			DaN			Package (pcs)
RH01200800000	80	35	100	12	40	40
RH01201000000	100	35	150	12	40	30
RH01201250000	125	35	240	12	40	25

MATERIAL - SURFACE TREATMENT
Wheel: PF (Phenolic resin) black
Support: Fixed plate AC (Steel) white galvanized

HUB

WORKING SPEED
4 Km/h max

OPERATING TEMPERATURE
-25°C ÷ 260°C

USE
Manual cart for light loads; good resistance to humidity, petroleum products, and chemicals, but low resistance to abrasion.

1 3

NOTES
Also available with stainless steel supports.

Code			DaN						Package (pcs)
RH512F0800000	80	35	100	108	100 x 84	80 x 60	9	40 x 8	16
RH512F1000000	100	35	150	127	100 x 84	80 x 60	9	40 x 8	12
RH512F1250000	125	35	150	159	116 x 84	80 x 60	9	44 x 8	8

BERARDI FASTENERS since 1919

MATERIAL - SURFACE TREATMENT
Wheel: PF (Phenolic resin) black
Support: Double crown ball swivel plate AC (Steel) white galvanized

HUB

WORKING SPEED
4 Km/h max

OPERATING TEMPERATURE
-25°C ÷ 260°C

USE
Manual cart for light loads; good resistance to humidity, petroleum products, and chemicals, but low resistance to abrasion.

1 3

NOTES
Also available with stainless steel supports.

Code			DaN							Package (pcs)
RH512R0800000	80	35	100	108	100 x 80	80 x 60	9	40 x 8	32	18
RH512R1000000	100	35	150	127	100 x 80	80 x 60	9	40 x 8	33	14
RH512R1250000	125	35	150	159	117 x 85	80 x 60	9	44 x 8	46	12

MATERIAL - SURFACE TREATMENT
Wheel: PF (Phenolic resin) black
Support: Total brake double crown ball swivel plate AC (Steel) white galvanized

HUB

WORKING SPEED
4 Km/h max

OPERATING TEMPERATURE
-25°C ÷ 260°C

USE
Manual cart for light loads; good resistance to humidity, petroleum products, and chemicals, but low resistance to abrasion.

1 3

NOTES
Also available with stainless steel supports.

Code			DaN								Package (pcs)
RH512S080A000	80	35	100	108	100 x 80	80 x 60	9	40 x 8	32	116	14
RH512S100A000	100	35	150	127	100 x 80	80 x 60	9	40 x 8	33	116	12
RH512S125A000	125	35	150	159	117 x 85	80 x 60	9	44 x 8	46	130	8

MATERIAL - SURFACE TREATMENT
Wheel: PU ring (Polyurethane) 94 ShA (±2) orange
AL core (Aluminium)

HUB

WORKING SPEED
4 Km/h max

OPERATING TEMPERATURE
-25°C ÷ 60°C

USE
Manual cart for heavy loads; good resistance to wear, impacts, grease, and petroleum products, but keep away from contact with saturated steam, acid, strong bases, ketonic and chlorinated solvents.

1 3

NOTES
Wheel diameter <125 smooth core.
Wheel diameter >100 corrugated core.

ACCESSORIES
Mounting accessories are not included but are available upon request.

Code			DaN			Package (pcs)
RH00200800000	80	25	150	12	30	20
RH00201000000	100	30	200	15	30	16
RH00201250000	125	30	250	15	40	8
RH00201500000	150	40	400	17	45	8
RH00201600000	160	50	500	20	60	8
RH00202000000	200	50	750	25	60	4

MATERIAL - SURFACE TREATMENT
Wheel: PU ring (Polyurethane) 94 ShA (±2) orange
AL core (Aluminium)
Support: Fixed plate AC (Steel) white galvanized

HUB

WORKING SPEED
4 Km/h max

OPERATING TEMPERATURE
-25°C ÷ 60°C

USE
Manual cart for heavy loads; good resistance to wear, impacts, grease, and petroleum products, but keep away from contact with saturated steam, acid, strong bases, ketonic and chlorinated solvents.

1 3

NOTES
Wheel diameter <125 smooth core.
Wheel diameter >100 corrugated core.
Also available with stainless steel supports.

Code			DaN						Package (pcs)
RH502F0800000	80	25	150	108	100 x 84	80 x 60	9	41 x 8	16
RH502F1000000	100	30	180	127	100 x 84	80 x 60	9	40 x 8	12
RH502F1250000	125	30	200	160	116 x 84	80 x 60	9	44 x 8	8
RH502F1500000	150	40	220	184	134 x 110	105 x 80	11	48 x 10	4
RH502F1600000	160	50	300	208	135 x 110	105 x 80	11	59 x 12	4
RH502F2000000	200	50	300	240	135 x 110	105 x 80	11	59 x 12	2

MATERIAL - SURFACE TREATMENT
Wheel: PU ring (Polyurethane) 94 ShA (±2) orange
AL core (Aluminium)
Support: Double crown ball swivel plate AC (Steel)
white galvanized

HUB

WORKING SPEED
4 Km/h max

OPERATING TEMPERATURE
-25°C ÷ 60°C

USE
Manual cart for heavy loads; good resistance to wear, impacts, grease, and petroleum products, but keep away from contact with saturated steam, acid, strong bases, ketonic and chlorinated solvents.

1 3

NOTES
Wheel diameter <125 smooth core.
Wheel diameter >100 corrugated core.
Also available with stainless steel supports.

Code			DaN							Package (pcs)
RH502R0800000	80	25	150	108	100 x 80	80 x 60	9	41 x 8	32	18
RH502R1000000	100	30	180	127	100 x 80	80 x 60	9	40 x 8	33	14
RH502R1250000	125	30	200	159	117 x 85	80 x 60	9	44 x 8	46	8
RH502R1500000	150	40	220	186	133 x 106	105 x 80	11	48 x 10	47	4
RH502R1600000	160	50	300	208	132 x 110	105 x 80	11	59 x 12	57	4
RH502R2000000	200	50	300	240	132 x 110	105 x 80	11	59 x 12	56	2

MATERIAL - SURFACE TREATMENT

Wheel: PU ring (Polyurethane) 94 ShA (±2) orange
AL core (Aluminium)

Support: Total brake double crown ball swivel plate
AC (Steel) white galvanized

HUB

WORKING SPEED
4 Km/h max

OPERATING TEMPERATURE
-25°C ÷ 60°C

USE
Manual cart for heavy loads; good resistance to wear, impacts, grease, and petroleum products, but keep away from contact with saturated steam, acid, strong bases, ketonic and chlorinated solvents.

1 3

NOTES
Wheel diameter <125 smooth core.
Wheel diameter >100 corrugated core.
Also available with stainless steel supports.

Code			DaN								Package (pcs)
RH502S080A000	80	25	150	108	100 x 80	80 x 60	9	41 x 8	32	114	16
RH502S100A000	100	30	180	127	100 x 80	80 x 60	9	40 x 8	33	117	12
RH502S125A000	125	30	200	159	117 x 85	80 x 60	9	44 x 8	46	130	8
RH502S150A000	150	40	220	186	133 x 106	105 x 80	11	48 x 10	47	144	4
RH502S160A000	160	50	300	208	132 x 110	105 x 80	11	59 x 12	57	156	4
RH502S200A000	200	50	300	240	132 x 110	105 x 80	11	59 x 12	56	157	2

MATERIAL - SURFACE TREATMENT
Wheel: Ring PU (Polyurethane) 92 ShA (±2) orange
Core GH (Cast iron)

HUB

WORKING SPEED
4 Km/h max

OPERATING TEMPERATURE
-20°C ÷ 60°C

USE
Manual cart for heavy loads; good resistance to wear, impacts, grease, and petroleum products, but keep away from contact with saturated steam, acid, strong bases, saline solution, ketonic and chlorinated solvents.

1 3

ACCESSORIES
Mounting accessories are not included but are available upon request.

Code			DaN			Package (pcs)
RH00700800000	80	25	160	15	25	20
RH00701000000	100	30	225	15	30	16
RH00701250000	125	30	300	15	35	8
RH00701500000	150	40	450	17	40	8
RH00701750000	175	40	650	20	40	4
RH00702000000	200	50	950	20	60	4
RH00702500000	250	50	1.150	25	60	4

MATERIAL - SURFACE TREATMENT
Wheel: Ring PU (Polyurethane) 92 ShA (±2) orange
Core GH (Cast iron)
Support: Fixed plate AC (Steel) white galvanized

HUB

WORKING SPEED
4 Km/h max

OPERATING TEMPERATURE
-20°C ÷ 60°C

USE
Manual cart for heavy loads; good resistance to wear, impacts, grease, and petroleum products, but keep away from contact with saturated steam, acid, strong bases, saline solution, ketonic and chlorinated solvents.

1 3

NOTES
Also available with stainless steel supports.

Code			DaN						Package (pcs)
RH508F0800000	80	25	160	125	100 x 88	80 x 60	9	40 x 8	12
RH508F1000000	100	30	225	135	100 x 88	80 x 60	9	40 x 8	8
RH508F1250000	125	30	300	161	100 x 88	80 x 60	9	44 x 8	8
RH508F1500000	150	40	400	188	134 x 114	105 x 80	11	48 x 10	6
RH508F1750000	175	40	650	230	134 x 114	105 x 80	12	60 x 12	4
RH508F2000000	200	50	700	242	134 x 114	105 x 80	12	60 x 12	2
RH508F2500000	250	50	1150	307	196 x 160	160 x 120	15	79 x 18	2

MATERIAL - SURFACE TREATMENT
Wheel: Ring PU (Polyurethane) 92 ShA (±2) orange
Core GH (Cast iron)
Support: Double crown ball swivel plate AC (Steel)
white galvanized

HUB

WORKING SPEED
4 Km/h max

OPERATING TEMPERATURE
-20°C ÷ 60°C

USE
Manual cart for heavy loads; good resistance to wear, impacts, grease, and petroleum products, but keep away from contact with saturated steam, acid, strong bases, saline solution, ketonic and chlorinated solvents.

1 3

NOTES
Also available with stainless steel supports.

Code			DaN							Package (pcs)
RH508R0800000	80	25	160	125	100 x 88	80 x 60	9	40 x 8	47	16
RH508R1000000	100	30	225	135	100 x 88	80 x 60	9	40 x 8	47	8
RH508R1250000	125	30	300	161	100 x 88	80 x 60	9	44 x 8	51	8
RH508R1500000	150	40	400	188	132 x 110	105 x 80	11,5	48 x 10	45	4
RH508R1750000	175	40	650	230	132 x 110	105 x 80	12	60 x 12	59	4
RH508R2000000	200	50	700	242	132 x 110	105 x 80	12	60 x 12	59	2
RH508R2500000	250	50	1150	307	200 x 160	160 x 120	15	79 x 18	64	2

MATERIAL - SURFACE TREATMENT

Wheel: Ring PU (Polyurethane) 92 ShA (±2) orange
Core GH (Cast iron)

Support: Total brake double crown ball swivel plate
AC (Steel) white galvanized

HUB

WORKING SPEED
4 Km/h max

OPERATING TEMPERATURE
-20°C ÷ 60°C

USE
Manual cart for heavy loads; good resistance to wear, impacts, grease, and petroleum products, but keep away from contact with saturated steam, acid, strong bases, saline solution, ketonic and chlorinated solvents.

1 3

NOTES
Also available with stainless steel supports.

Code			DaN								Package (pcs)
RH508S080A000	80	25	160	125	100 x 84	80 x 60	9	40 x 8	47	113	10
RH508S100A000	100	30	225	135	100 x 84	80 x 60	9	40 x 8	47	114	8
RH508S100P000	100	30	225	135	100 x 84	80 x 60	9	40 x 8	47	99	10
RH508S125A000	125	30	300	161	100 x 84	80 x 60	9	44 x 8	51	128	6
RH508S125P000	125	30	300	161	100 x 84	80 x 60	9	44 x 8	51	100	10
RH508S150A000	150	40	400	188	132 x 110	105 x 80	11,5	48 x 10	45	128	4
RH508S150P000	150	40	400	188	132 x 110	105 x 80	11,5	48 x 10	45	108	6
RH508S175A000	175	40	650	230	132 x 110	105 x 80	12	60 x 12	59	158	4
RH508S175P000	175	40	650	230	132 x 110	105 x 80	12	60 x 12	59	109	6
RH508S200A000	200	50	700	242	132 x 110	105 x 80	12	60 x 12	59	158	2
RH508S200P000	200	50	700	242	132 x 110	105 x 80	12	60 x 12	59	109	4
RH508S250P000	250	50	1150	307	200 x 160	160 x 160	15	79 x 18	64	135	2

MATERIAL - SURFACE TREATMENT
Wheel: PU ring (Polyurethane) 94 ShA (±2) orange
Core AC (Steel)

HUB

USE

1 3

ACCESSORIES
Mounting accessories are not included but are available upon request.

Code			DaN		Package (pcs)
RH01000800600	80	60	530	20	16
RH01000800700	80	70	650	20	16
RH01000800800	80	80	700	20	16
RH01000800900	80	90	780	20	16
RH01000801000	80	100	850	20	16
RH01000820600	82	60	550	20	16
RH01000820700	82	70	650	20	16
RH01000850700	85	70	650	20	16
RH01000850800	85	80	750	20	16
RH01000850900	85	90	800	20	16
RH01000851000	85	100	900	20	16

www.gberardi.com

BERARDI BULLONERIE s.r.l. a socio unico

Via San Carlo, 1 - Loc. Poggio Piccolo
40023 Castel Guelfo di Bologna (BO) ITALIA
Tel. +39 0542 671911 - Fax +39 0542 671940
ic@gberardi.com

BERARDI
FASTENERS since 1919

Branches
BOLOGNA - MILANO - TREVISO - BRESCIA - PADOVA - REGGIO EMILIA - ANZOLA EMILIA - FORLÌ CESENA
RIMINI - PISTOIA - FROSINONE - ANCONA - CASERTA - BARI - KASTAV (CROAZIA)

BERARDI
BOULONNERIE MAROC